JOINT TECHNICAL MANUAL FOR MK 2 MOD 0, MINE CLEARANCE SYSTEM (MARINE CORPS) AND MINE CLEARANCE LINE CHARGE - MICLIC (ARMY) FOR OPERATOR'S, UNIT AND DIRECT SUPPORT MAINTENANCE MANUAL WITH COMPONENTS LIST, REPAIR PARTS AND SPECIAL TOOLS LIST

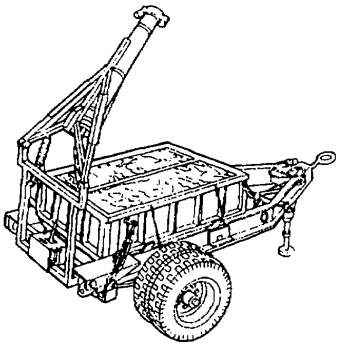

MICLIC System Mounted on
Modified M200A1 Wheeled Trailer

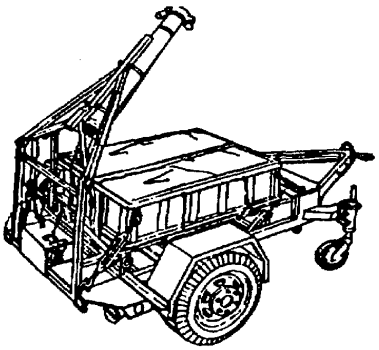

MK 2 Mine Clearance System
Mounted on M353 Trailer

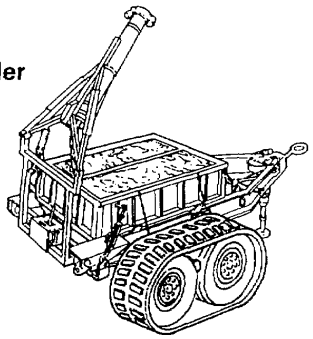

MICLIC System Mounted on
Modified M200A1 Tracked Trailer

HEADQUARTERS, U.S. MARINE CORPS
HEADQUARTERS, DEPARTMENT OF THE ARMY

DISTRIBUTION STATEMENT C: THIS PUBLICATION IS REQUIRED FOR OFFICIAL USE OR FOR ADMINISTRATIVE OR OPERATIONAL PURPOSES. DISTRIBUTION IS LIMITED TO U.S. GOVERNMENT AGENCIES ONLY. OTHER REQUESTS FOR THIS DOCUMENT MUST BE REFERRED TO: COMMANDANT OF THE MARINE CORPS (ARD), WASHINGTON, D.C. 20380-0001 OR DIRECTOR, ARMAMENT AND CHEMICAL ACQUISITION AND LOGISTICS ACTIVITY, ATTN: AMSTA-AC-NML, ROCK ISLAND, IL 61299-7630.

DESTRUCTION NOTICE: FOR UNCLASSIFIED, DESTROY BY ANY METHOD THAT WILL PREVENT DISCLOSURE OF CONTENTS OR RECONSTRUCTION OF THE DOCUMENTS.

FOR OFFICIAL USE ONLY

OCTOBER 1997
PCN 184 089820 00

THIS MANUAL COVERS COMPONENTS FOR THE FOUR VARIATIONS OF THE MK 2 MINE CLEARANCE LINE CHARGE SYSTEM AS FOLLOWS:

MOD 0

Launcher, Mine Clearance, MK155
MK 155, MOD 0 (1055-01-203-5883)
Chassis, Trailer: General Purpose,
3-1/2 Ton, 2-Wheel M353
(2330-00-542-2831)

MOD 1

Launcher, Mine Clearance, MK155
MK 155, MOD 1 (1055-01-281-2770)
Chassis, Trailer: General Purpose,
2-1/2 Ton, 2-Wheel, M200A1
(2330-00-331-2307)

MOD 2

Launcher, Mine Clearance, MK155
MOD 2 (1055-01-340-6084)
Chassis, Trailer: General Purpose,
3-1/2 Ton, 2-Wheel, M353
(2330-00-542-2831)

MOD 3

Launcher, Mine Clearance, MK155
MOD 3 (1055-01-327-3106)
Chassis, Trailer: General Purpose,
2-1/2 Ton, 2-Wheel, M200A1
(2330-00-331-2307)

AMMUNITION

Service

Charge, Demolition: Linear, HE, M58A3/4 (M913)
Rocket Motor: 5-Inch, MK22, MOD 3/4 (J143)

Training

Charge, Demolition, Practice: M68A2 (M914)
Rocket Motor: 5-Inch, MK22 MOD 3/4 (J143)

DEPARTMENT OF THE NAVY
Headquarters, U.S. Marine Corps
Washington, DC 20380-0001

31 October 1997

1. This Technical Manual (TM), authenticated for Marine Corps use and effective upon receipt, describes operation, maintenance, and unit and direct support for the Mine Clearance System.

2. Submit notice of discrepancies or suggested changes on NAVMC 10772 to: Commander, Marine Corps Logistics Bases (Code 850), 814 Radford Blvd., Albany, GA 31704-5000. In addition, forward an information copy to the Project Officer at the following address: Commander, Attn: CSLE, MARCORSYSCOM, 2033 Barnett Ave, Suite 315, Quantico, VA 22134-5010 or via the following Internet address: LOGC@QUANTICO.USMC.MIL.

3. TM 08982A-14/2A is hereby superseded for Marine Corps use.

BY DIRECTION OF THE COMMANDANT OF THE MARINE CORPS

OFFICIAL:

M. K. HAYDEN
Colonel, USMC
Director, Program Support
Marine Corps Systems Command

DISTRIBUTION: PCN 184 089820 00

THIS PAGE INTENTIONALLY LEFT BLANK

LIST OF EFFECTIVE PAGES

INSERT LATEST CHANGED PAGES. DESTROY SUPERSEDED PAGES.

Note : The portion of the text affected by the changes is indicated by a vertical line in the outer margin of the page. Changes to illustrations are indicated by miniature pointing hands. Changes to wiring diagrams are indicated by shaded areas.

Dates of issue for original and changed pages are:

Original .....31 October 1997

TOTAL NUMBER OF PAGES IN THIS PUBLICATION IS 686 CONSISTING OF THE FOLLOWING:

Page No.	*** Change No.**
Cover	0
1/(2 Blank)	0
A (B Bank)	0
Record of Changes (Back Blank)	0
a-n	0
i through xxiii	0
1-0 through (1-40 Blank)	0
2-1 through 2-172	0
3-1 through 3-20	0
4-1 through (4-120 Blank)	0
5-1 through (5-54 Blank)	0
6-1 through (6-28 Blank)	0
A-1 through A-4	0
B-1 through B-8	0
C-1 through C-10	0
D-1 through (D-2 Blank)	0
E-1 through (E-8 Blank)	0
F-1 through (F-90 Blank)	0
G-1 trough (G-18 Blank)	0
H-1 through (H-4 Blank)	0
I-1 through (I-28 Blank)	0
J-1 through (J-14 Blank)	0
K-1 through K-8	0
Index-1 through Index-12	0

*Zero in this column indicates an original page

THIS PAGE INTENTIONALLY LEFT BLANK

RECORD OF CHANGES

CHANGE NO.	DATE	TITLE OR BRIEF DESCRIPTION	ENTERED BY

THIS PAGE INTENTIONALLY LEFT BLANK

SAFETY SUMMARY

WARNINGS

- WHEN DESTROYING THE ROCKET BY BURNING, REMOVE THE RETAINING SCREW (MOD 3) OR QUICK RELEASE PIN (MOD 4) TO PREVENT ROCKET FLIGHT WHEN THE PROPELLANT GRAINS IGNITE. (1-2)

- NEVER ATTEMPT TO ATTACH AN ARMED FUZE INTO A LINEAR DEMOLITION CHARGE. PREMATURE DETONATION MAY RESULT. (2-25)

- CONNECTING THE M34 BLASTING MACHINE TO THE SELECTOR SWITCH ASSEMBLY ALLOWS A PATH FOR STRAY VOLTAGE TO REACH THE ROCKET MOTOR. THE M34 SHOULD NOT BE CONNECTED TO THE SELECTOR SWITCH ASSEMBLY UNTIL REACHING THE BREECH POSITION AND THE LAUNCHER RAIL IS RAISED TO THE FIRING POSITION AND YOU ARE READY TO FIRE. THE PRIMARY OPERATOR WILL KEEP THE M34 BLASTING MACHINE UNDER CONTROL AT ALL TIMES. (2-25), (2-90), (2-112), (2-115), (2-127), (2-133), (2-140), (2-145)

- NEVER ATTEMPT TO BYPASS THE LAUNCHER'S SAFETY SWITCH WHEN ELECTRICALLY CONNECTING ROCKET MOTOR AND LINEAR DEMOLITION CHARGE. THIS ALLOWS AN ELECTRICAL PATH FOR PREMATURE FIRING. (2-25) ·

- WHEN THE TRAILER IS TOWED BY A VEHICLE NOT EQUIPPED WITH A TRAILER BRAKE INTERCONNECTION, RESTRICT OPERATION TO NON-PUBLIC AREAS (UNDER DOT REGULATIONS) AND VEHICLE TO THE FOLLOWING SPEEDS:

  0-5 MPH - - - - - - - ROUGH BROKEN TERRAIN
  0-10 MPH - - - - - - - FLAT ROUGH TERRAIN
  0-15 MPH - - - - - - - SMOOTH OFF ROAD
  0-25 MPH - - - - - - - SECONDARY ROADS (2-25), (2-92), (2-115)

- THE VEHICLE COMMANDER SHOULD CLOSELY MONITOR THE TRAILER AND ITS CONTENTS DURING SUCH TOWING. (2-25), (2-92)

- DO NOT MAKE SHARP TURNS WHEN TOWING THE TRAILER WITH TRACKED VEHICLES. THIS CAN CAUSE THE TRAILER TO OVERTURN AND BE DAMAGED FROM CONTACT WITH THE TOWING VEHICLE'S TRACKS. THE VEHICLE COMMANDER SHOULD KEEP THE TRAILER AND ITS CONTENTS UNDER CLOSE SCRUTINY DURING SUCH TOWING. (2-26), (2-92), (2-115)

- WHEN PREPARING TO DEPLOY THE MICLIC USING THE REMOTE TRAILER DISCONNECT DEVICE, DO NOT CONNECT SAFETY CHAINS, AIR HOSES, OR INTER-VEHICLE TRAILER CABLE TO TOWING VEHICLE. (2-26)

WARNINGS (Cont)

- **KEEP PERSONNEL CLEAR OF LAUNCHER RAIL WHEN OPERATING LAUNCHER AND HYDRAULICS. LAUNCHER RAIL SHOULD RAISE WHEN CONTROL VALVE IS MOVED TO THE REMOTE RAISE POSITION. (2-29), (2-31)**

- **DO NOT ALLOW LAUNCHER TO SWAY DURING INSTALLATION TO AVOID INJURY TO PERSONNEL MARINE CORPS RECOMMENDS USE OF ROPES TO CONTROL SWAYING. (2-33)**

- **LOADED LINEAR DEMOLITION CHARGE CONTAINER WEIGHS APPROXIMATELY 2,850 LBS (1295 KG). MAKE SURE HANDLING EQUIPMENT IS CAPABLE OF LIFTING THAT WEIGHT TO AVOID INJURY TO PERSONNEL. (2-39)**

- **DO NOT ALLOW LINEAR DEMOLITION CHARGE CONTAINER TO SWAY DURING INSTALLATION TO AVOID INJURY TO PERSONNEL THE M58 LINEAR DEMOLITION CHARGE CONTAINS APPROXIMATELY 1,750 LBS (836.4 KG) OF HIGH EXPLOSIVES. OBSERVE WARNINGS PLACED IN FRONT OF THIS MANUAL. (2-39)**

- **PERSONNEL NEAR STEEL BAND CUTTING OPERATIONS WILL WEAR GOGGLES/FACE SHIELDS. OPERATORS HANDLING THE METAL BANDING WILL ALSO WEAR LEATHER OR LEATHER-PALMED GLOVES. (2-39), (2-43), (2-62)**

- **NEVER ALLOW THE FRONT END OF A FUZE TO BE POINTED TOWARD PERSONNEL. (2-52)**

- **KEEP HANDS AWAY FROM FRONT END OF A CONNECTED FUZE TO AVOID INJURY TO PERSONNEL. (2-52)**

- **DO NOT PULL ON ARRESTING CABLE. PULLING COULD BREAK SHORTING LOOP. (2-52)**

- **KEEP LINEAR DEMOLITION CHARGE MI 134 SERIES FUZE AND ROCKET MOTOR AWAY FROM SOURCES OF RADIO FREQUENCY (RF) ENERGY SUCH AS RADIO OR RADAR TRANSMITTERS. ALTHOUGH THE ELECTRO-EXPLOSIVE DEVICES IN THE FUZE AND MOTOR ARE BOTH WELL PROTECTED FROM RF ENERGY INITIATION, THERE IS NO ABSOLUTE PROTECTION. KEEP AT LEAST 5 FEET (1.52 M) BETWEEN A LOW POWER OPERATING TRANSMITTER (SUCH AS A WALKIE-TALKIE) AND THESE ITEMS. THE STANDARD RADIOS USED IN EXPECTED TOWING VEHICLES WILL PRESENT NO PROBLEMS AT THE DISTANCES THEY WILL NORMALLY BE FROM THE FUZE AND ROCKET MOTOR. FOR SAFE DISTANCES FROM HIGHER POWERED TRANSMITTERS, REFER TO TM 9-1300-206. (2-61), (2-98)**

WARNINGS (Cont)

- THE MK 22 MOD 3/4 ROCKET MOTORS ARE LIVE AMMUNITION. TREAT THEM AS SUCH. FOR PROCEDURES IN HANDLING LIVE AMMUNITION, REFER TO TM 9-1300-206. (2-63)

- IF ROCKET MOTOR IS DROPPED MORE THAN 24 INCHES, IT SHOULD NOT BE FIRED. A CRACKED ROCKET MOTOR GRAIN CAN CAUSE INCREASED INTERNAL PRESSURE AND BURSTING OF THE MOTOR CASE. (2-63), (2-68)

- ENSURE ROCKET MOTOR BUTTON LUG BANDS ARE FULLY ENGAGED ON THE LAUNCHER ALIGNMENT PINS AND HAND KNOBS ARE TIGHTENED. A LOOSE ROCKET MOTOR CAN CAUSE ERRATIC FLIGHT. (2-68)

- THE M34 BLASTING MACHINE SHOULD NOT BE CONNECTED TO THE SELECTOR SWITCH BOX UNTIL REACHING THE BREECH POSITION AND THE LAUNCHER RAIL IS RAISED TO THE FIRING POSITION AND YOU ARE READY TO FIRE. THE PRIMARY OPERATOR WILL KEEP THE M34 BLASTING MACHINE UNDER CONTROL AT ALL TIMES. (2-88)

- USMC ONLY. A LOOSE CABLE ON THE MOD 3 ROCKET MOTOR WILL CAUSE ERRATIC FLIGHT. DO NOT INSTALL A ROCKET WITH A LOOSE CABLE. DO NOT TOUCH THE CABLE DURING ROCKET HANDLING. (2-88)

- FAILURE TO INSERT THE PIN COMPLETELY INTO THE THRUST NEUTRALIZATION PLUG MAY RESULT IN THE ROCKET MOTOR BURNING ON THE RAIL OR PARTIAL DEPLOYMENT OF THE LINEAR CHARGE. THE RETAINER SCREW FOR THE MOD 3 ROCKET (FIGURE 1.9), AND THE QUICK-RELEASE PIN FOR THE MOD 4 ROCKET (FIGURE 1.10) ARE INSERTED IN THE FRONT OF THE ROCKET. PINS MUST BE INSERTED; YOUR LIFE MAY DEPEND ON IT. (2-88), (2-112)

- LAUNCH OF THE M58 LINEAR DEMOLITION CHARGE BY PERSONNEL OUTSIDE OF AN ARMORED VEHICLE IS PROHIBITED. THE LINEAR CHARGE IS SUSCEPTIBLE TO STATIC ELECTRICITY AND CAN PREMATURELY DETONATE IN THE AIR. PREMATURE DETONATION WILL ONLY OCCUR WHEN THE ARRESTING CABLE IS FULLY EXTENDED AND PRESENTS NO DANGER TO PERSONNEL IN A "BUTTONED-UP" ARMORED VEHICLE. (2-90), (2-126), (2-135), (2-140), (2-144)

- DO NOT TOW MICLIC BEHIND AN M1 SERIES TANK. THE EXTREME HEAT OF THE TANK'S EXHAUST CAN IGNITE THE LINEAR DEMOLITION CHARGE OR ROCKET MOTOR. (2-90), (2-109), (2-126)

WARNINGS (Cont)

- **ENSURE TRAILER QUICK-RELEASE OF ASSAULT AMPHIBIOUS VEHICLE IS FUNCTIONING PROPERLY. TRAILER MAY HAVE TO BE REMOTELY RELEASED IF ROCKET BURNS ON THE RAIL OR THE LINE CHARGE IS IMPROPERLY DEPLOYED. (2-90)**

- **CONNECTING BLASTING MACHINE TO SELECTOR SWITCH ASSEMBLY IS THE LAST OPERATION BEFORE FIRING. TO AVOID PREMATURE CONNECTION AND FIRING, THE PRIMARY OPERATOR WILL HAVE POSSESSION OF THE BLASTING MACHINE AT ALL TIMES. (2-110)**

- **MICLIC MUST NOT BE TOWED BEHIND AN M1 TANK. THE EXTREME HEAT OF THE M1 TANK'S EXHAUST CAN IGNITE THE MK 22 ROCKET, M58 AND M68 LINE CHARGES THAT ARE CARRIED ON THE MICLIC. (2-110)**

- **FAILURE TO INSERT THE PIN COMPLETELY INTO THE THRUST NEUTRALIZATION PLUG MAY RESULT IN THE ROCKET MOTOR BURNING ON THE RAIL OR PARTIAL DEPLOYMENT OF THE LINEAR CHARGE. THE QUICK RELEASE PIN FOR THE MOD 4 ROCKET MOTOR IS INSERTED IN THE FRONT OF THE ROCKET. PIN MUST BE INSERTED; YOUR LIFE MAY DEPEND ON IT. (2-112)**

- **PERSONNEL WILL TAKE COVER WHEN ROCKET MOTOR IS LAUNCHED. (2-116)**

- **ALL OPERATING AND CREW PERSONNEL MUST WEAR HEARING PROTECTION WHEN FIRING ROCKET MOTOR AND/OR LINEAR DEMOLITION CHARGE. (2-116), (2-135), (2-145)**

- **WHEN LAUNCHING PREVIOUSLY FIRED M68, INERT RUBBER BLOCKS MAY COME LOOSE FROM CHARGE WHEN DEPLOYED AND TRAVEL SEVERAL HUNDRED FEET. PERSONNEL SHOULD STAY UNDER COVER FOR ONE MINUTE AFTER INERT CHARGE HAS HIT THE GROUND. (2-116), (2-145)**

- **DO NOT LAUNCH INERT CHARGE MORE THAN THREE TIMES. IF CABLE OR LINEAR DEMOLITION CHARGE FAILS DURING LAUNCH, THE ROCKET COULD FLY FREE AND INJURE PERSONNEL (2-116), (2-135), (2-145)**

- **FIRING PERSONNEL WITHIN AREA F (SEE FIGURE 2.71 AND 2.72) SHALL BE IN A PROTECTED POSITION OR ARMORED VEHICLE (M60 OR M113 OR OTHER ARMORED VEHICLES) IN BUTTON-UP MODE WITH SINGLE HEARING PROTECTION DURING FIRING. (2-118)**

WARNINGS (Cont)

- **SPECTATORS WITHOUT HEARING PROTECTION SHALL NOT BE ALLOWED WITHIN THE MICLIC SURFACE DANGER ZONE OR NOISE HAZARD CONTOUR DURING FIRING. SPECTATORS WITH HEARING PROTECTION MUST GE AT LEAST 1,000 METERS TO THE REAR OF THE BLAST AREA. (2-118)**

- **FIRING PERSONNEL WITHIN AREA F (FIGURES 2.71, 2.72 AND 2.73) SHALL BE IN A PROTECTED POSITION OR ARMORED VEHICLE IN A BUTTONED-UP MODE WITH SINGLE HEARING PROTECTION DURING FIRING. (2-120)**

- **SPECTATORS SHALL NOT BE ALLOWED WITHIN THE MICLIC SURFACE DANGER ZONE OR NOISE HAZARD CONTOUR DURING FIRING. (2-120)**

- **SPECTATORS WITHOUT HEARING PROTECTION SHALL NOT BE ALLOWED WITHIN THE MICLIC SURFACE DANGER ZONE OR NOISE HAZARD CONTOUR DURING FIRING. SPECTATORS WITH HEARING PROTECTION MUST BE AT LEAST 1,000 METERS TO THE REAR OF THE BLAST AREA. (2-120)**

- **TO PREVENT LAUNCH AT IMPROPER ANGLE, DO NOT ATTEMPT TO LAUNCH ROCKET IN EXTREMELY UNEVEN TERRAIN. (2-121), (2-133), (2-140)**

- **TO AVOID INJURY, DO NOT ALLOW UNNECESSARY PERSONNEL IN THE DANGER ZONES. (2-121), (2-133), (2-140)**

- **WHEN LAUNCHING THE M58 HE LINEAR DEMOLITION CHARGE, IF THE ROCKET MOTOR INITIATES/FIRES BUT FAILS TO LAUNCH FROM THE RAIL, QUICKLY DISENGAGE THE TRAILER FROM THE TOW VEHICLE. EVACUATE THE AREA TO A SAFE DISTANCE (3,280 FEET MINIMUM)(1,000 M). IF THE LINEAR CHARGE IS ON FIRE, ALLOW CHARGE TO BURN OUT COMPLETELY BEFORE PERSONNEL APPROACH. IF LAUNCHING AN M58 HE LINEAR DEMOLITION CHARGE FROM THE AVLM AND ROCKET MOTOR BURNS ON THE RAIL, THEN EVACUATE THE VEHICLE TO A SAFE DISTANCE (3,280 FEET MINIMUM)(1,000 M). (2-123), (2-136), (2-146)**

- **ALLOW A ONE MINUTE FALLOUT PERIOD FOR FALLING FRAGMENTS PRIOR TO ADVANCING TROOPS, VEHICLES OR TANKS THROUGH THE CLEARED AREA. (2-124), (2-127), (2-131), (2-137), (2-140), (2-147)**

- **IF THE MK 22 ROCKET MOTOR INITIATES/FIRES AND FAILS TO LEAVE THE LAUNCH RAIL, DISCONNECT THE MICLIC SYSTEM FROM THE TOWING VEHICLE AND EVACUATE THE AREA. A BURNING ROCKET MOTOR CAN CATCH THE M58 LINEAR DEMOLITION CHARGE ON FIRE. A BURNING M58 LINEAR DEMOLITION CHARGE CAN DETONATE. (2-126), (2-133), (2-140)**

- **DO NOT APPROACH A BURNING M58 LINEAR DEMOLITION CHARGE OR ATTEMPT TO EXTINGUISH THE FIRE. A BURNING LINEAR DEMOLITION CHARGE CAN DETONATE. (2-126), (2-133), (2-140)**

WARNINGS (Cont)

- **LAUNCHING THE ROCKET MOTOR AT THE WRONG ANGLE CAN HAVE SERIOUS TO DEADLY CONSEQUENCES. MAKE SURE THAT WHITE MARKS ON INNER RAIL SUPPORTS ARE VISIBLE BUT HAVE NOT RISEN HIGH ENOUGH FOR THE VERTICAL WHITE MARKS (T-STRIPES) TO BE SEEN ABOVE THE OUTER LOWER LAUNCH RAIL SUPPORTS (ARMY ONLY). BOTH TOO LOW AND TOO HIGH LAUNCH ANGLES ARE DANGEROUS. (2-127), (2-129), (2-134), (2-144)**

- **DO NOT ATTEMPT TO BYPASS THE SAFETY SWITCH. DO NOT CONNECT CABLE ASSEMBLY NO. 3 TO RECEPTACLE NO. 1 ON THE CONTAINER. (2-127)**

- **THE ARRESTING CABLE IS UNDER GREAT TENSION AFTER THE LINEAR DEMOLITION CHARGE IS DEPLOYED AND, IN THE CASE OF THE INERT PRACTICE CHARGE WILL REMAIN UNDER TENSION. THE TENSION IS SO GREAT THAT THE TRAILER WILL BE JERKED FORWARD SEVERAL FEET IF THE CHOCKS ARE REMOVED, EVEN WITH THE BRAKES STILL SET. ASSURE ALL TENSION HAS BEEN REMOVED FROM THE ARRESTING CABLE PRIOR TO DISCONNECTING M68A2 LINEAR DEMOLITION CHARGE TRAINING FUZE. (2-128), (2-141), (2-172)**

- **DO NOT ATTEMPT TO BYPASS THE SAFETY SWITCH. DO NOT CONNECT W5P1 CONNECTOR TO LINEAR CHARGE JUNCTION BOX RECEPTACLE NO. 1 ON THE CONTAINER. (2-133), (2-140)**

- **WHEN LAUNCHING AND/OR DETONATING PREVIOUSLY FIRED M68A2, INERT RUBBER BLOCKS MAY COME LOOSE FROM CHARGE WHEN DEPLOYED AND TRAVEL SEVERAL HUNDRED FEET. PERSONNEL SHOULD STAY UNDER COVER FOR ONE MINUTE AFTER INERT CHARGE HAS HIT THE GROUND. (2-135)**

- **FOR REASONS OF PERSONAL SAFETY AND HEALTH, AVOID CONTACT WITH COMBUSTION PRODUCTS OF ROCKET LAUNCH AND CHARGE DETONATION. (2-145)**

- **DURING MISFIRES OR MALFUNCTIONS DO NOT APPROACH THE LAUNCHER FOR ANY REASON UNTIL A MINIMUM OF 30 MINUTES HAS PASSED SINCE THE LAST ATTEMPT TO FIRE THE ROCKET MOTOR. (2-148)**

- **DO NOT APPROACH THE LINEAR DEMOLITION CHARGE FOR ANY REASON UNTIL A 30 MINUTE WAITING PERIOD HAS ELAPSED SINCE THE LAST ATTEMPT TO DETONATE THE LINEAR DEMOLITION CHARGE. (2-150)**

WARNINGS (Cont)

- **BE CAREFUL WHEN APPROACHING A DEPLOYED LINEAR DEMOLITION CHARGE. IN MOST CASES THE FUZE WILL BE ARMED AND IS SUSCEPTIBLE TO STATIC ELECTRICITY. DO NOT ATTEMPT TO RECOVER THE FUZE FROM A MISFIRED LINEAR DEMOLITION CHARGE. (2-151)**

- **DO NOT REMOVE BALL-LOCK PINS FROM ARRESTING CABLE FUZE CONNECTOR UNTIL ALL TENSION HAS BEEN REMOVED FROM ARRESTING CABLE. IF TENSION REMAINS IN THE ARRESTING CABLE, THE FUZE WILL FLY FORWARD AND THE CONNECTOR WILL FLY BACK TOWARD THE CONTAINER AS SOON AS THE PIN IS REMOVED. (2-155), (2-156)**

- **EXPENDED ROCKET MOTORS MAY BE TOO HOT TO TOUCH FOR DISPOSAL. WAIT UNTIL THE ROCKET MOTOR HAS COOLED SUFFICIENTLY TO TOUCH WITHOUT CAUSING BURNS AND HANDLE CAREFULLY WITH GLOVES. (2-155), (2-158)**

- **DO NOT ALLOW LINEAR DEMOLITION CHARGE CONTAINER TO SWAY DURING REMOVAL TO AVOID INJURY TO PERSONNEL. MARINE CORPS RECOMMENDS USE OF ROPES TO CONTROL SWAYING. (2-162), (2-165)**

- **NEVER RAISE LAUNCHER RAIL BEYOND THE POINT WHERE THREADS START TO SHOW ON HYDRAULIC CYLINDER, ABOUT 75° ELEVATION OR THE HYDRAULIC CYLINDER MAY BE DAMAGED. (2-165)**

- **WHEN USING FORKLIFT, DO NOT ATTEMPT TO UNLOAD LAUNCHER FROM FRONT OR REAR OF TRAILER. (2-165), (2-167)**

- **WEAR PROTECTIVE GOGGLES WHILE WORKING UNDER TRAILER. IT IS RECOMMENDED THAT THE TRAILER WHEELS BE BLOCKED AND/OR BRAKE BE APPLIED TO PREVENT IT FROM ROLLING. (2-166)**

- **DO NOT ALLOW LAUNCHER TO SWAY DURING REMOVAL TO AVOID INJURY TO PERSONNEL MARINE CORPS RECOMMENDS USE OF ROPE TO CONTROL SWAYING. (2-167)**

- **DENATURED ALCOHOL IS FLAMMABLE. KEEP AWAY FROM IGNITION SOURCES. USE IN WELL-VENTILATED AREA. (3-14), (6-11)**

- **WEAR LEATHER GLOVES OR EQUIVALENT WHEN REPACKING CHARGE. (3-15)**

- **PERSONNEL NEAR STEEL BANDING OR BAND CUTTING OPERATIONS WILL WEAR GOGGLES. OPERATORS HANDLING METAL BANDING WILL ALSO WEAR LEATHER OR LEATHER-PALMED GOLVES (4-3)**

WARNINGS (Cont)

- **BEFORE ATTEMPTING TO CUT BANDING, ENSURE THAT HYDRAULIC VALVE LEVER IS IN THE "MANUAL RAISE/LOWER" POSITION AND THAT "HOLD/RELEASE PUMP VALVE" IS IN THE "RELEASE" POSITION. THIS WILL PREVENT THE RAIL FROM RAISING WHEN BANDING IS CUT IN THE EVENT THAT THE SYSTEM IS UNDER PRESSURE. (4-3)**

- **PERSONNEL NEAR STEEL BANDING OR BAND CUTTING OPERATIONS WILL WEAR GOGGLES/FACE SHIELDS. OPERATORS HANDLING METAL BANDING WILL ALSO WEAR LEATHER OR LEATHER-PALMED GLOVES. (4-7)**

- **SOME PERSONS ARE SENSITIVE TO HYDRAULIC FLUID AND SKIN IRRITATION RESULTS FROM CONTACT. WASH CONTACTED OR IRRITATED AREAS WITH SOAP AND WATER IMMEDIATELY. SUCH PERSONS SHOULD USE PLASTIC GLOVES AND LABORATORY APRONS LISTED IN MATERIALS/PARTS LISTS WHEN HANDLING HYDRAULIC FLUID. (4-28)**

- **SUPPORT FORWARD-END OF LAUNCHER RAIL WHILE REMOVING CLEVIS MOUNTING TO PREVENT RAIL FROM FALLING AND INJURING PERSONNEL (4-32)**

- **IF LAUNCHER RAIL HAS NOT BEEN REMOVED, DO NOT ATTEMPT TO REMOVE BOTH SUPPORT ASSEMBLIES AT THE SAME TIME. ENSURE BALL-LOCK PIN (FOR THE SUPPORTS THAT ARE NOT REPLACED) IS IN LOCK POSITION. (4-36)**

- **SUPPORT LAUNCHER RAIL SUPPORTS WHILE REMOVING UPPER CLEVIS PINS TO PREVENT THEM FROM FALLING AND STRIKING PERSONNEL. (4-36)**

- **TO AVOID EYE INJURY, WEAR SAFETY GOGGLES WHEN WORKING WITH HYDRAULIC FLUID. (4-51), (4-57), (4-60), (4-70), (4-77), (4-81), (4-83), (4-86), (4-98), (5-33), (5-36), (5-40)**

- **WEAR PLASTIC GLOVES AND LABORATORY APRON WHEN WORKING WITH HYDRAULIC FLUID TO AVOID PERSONNEL INJURY. (4-64), (4-81), (4-83)**

- **AN APPROVED RESPIRATOR MUST BE WORN WHEN MIXING OR PAINTING WITH CARC. (4-119)**

- **CLOTHING THAT GIVES TOTAL SKIN COVERAGE AND RUBBER GLOVES MUST BE WORN WHEN DEALING WITH CARC. A FACE SHIELD OR SAFETY GOGGLES MUST ALSO BE WORN. (4-119)**

- **TO AVOID INJURY TO EYES, WEAR GOGGLES OR FACE SHIELD WHILE USING WIRE BRUSH AND CHEMICALS. (5-2)**

- **TO PREVENT EYE AND LUNG DAMAGE, VENTILATE ROOM AND WEAR RESPIRATOR WHEN USING SOLVENTS OR PAINT. (5-2)**

WARNINGS (Cont)

- **TO AVOID CONTACT OF CARC PAINT WITH SKIN AND EYES, WEAR RUBBER OR PLASTIC GLOVES AND FULL COVERAGE CLOTHING. A LABORATORY APRON IS ADVISABLE WHILE MIXING CARC. (5-2)**
- **DO NOT SMOKE OR PERMIT ANY SOURCE OF IGNITION NEAR PAINTING OPERATION. (5-2), (K-7)**
- **MAINTAIN A CONTINUOUS ELECTRICAL GROUND ON ALL EQUIPMENT TO PREVENT STATIC BUILDUP WHICH COULD PRODUCE A SPARK AND IGNITE THE MATERIAL APPROVED GROUNDING AND BONDING CONNECTIONS MUST BE USED. (5-3), (K-7)**
- **USE EYE PROTECTION AND PROTECTIVE GLOVES WHEN MIXING AND USING WASH PRIMER AND CARC PAINT. (5-3)**
- **OBSERVE ALL STANDARD WELDING SAFETY PROCEDURES. (5-4)**
- **USE OPERATION SITE VENTILATION TO DIRECT FUMES FROM OPERATOR WHEN WELDING OR GRINDING ON THE LAUNCHER TO MINIMIZE EXPOSURE TO VAPOR OR DUST FROM CARC PAINT. (5-4)**
- **DO NOT SMOKE OR PERMIT OPEN FLAMES NEAR SOLVENT. SOLVENT IS FLAMMABLE AND CAN CAUSE SEVERE BURNS. (5-33)**
- **DO NOT SMOKE OR PERMIT OPEN FLAMES NEAR SOLVENT. MANY SOLVENTS ARE FLAMMABLE AND CAN CAUSE SEVERE BURNS. (5-36), (5-40), (5-41)**
- **EXPLOSIVE HAZARD POSSIBLE IF OXYGEN IS USED. NEVER USE OXYGEN TO CHARGE ACCUMULATOR. ACCUMULATOR MUST BE CHARGED WITH DRY NITROGEN. (5-43)**
- **TO AVOID EYE INJURY, WEAR SAFETY GOGGLES WHEN WORKING. (5-44)**
- **ENSURE THAT PROPER BONDING IS MADE BETWEEN THE MINE CLEARANCE LAUNCHER AND HELICOPTER TO PREVENT THE BUILD-UP OF STATIC ELECTRICITY. (5-51)**
- **LINE CHARGE SHOULD NOT BE FUZED DURING HELICOPTER TRANSPORTATION. (5-51)**
- **DO NOT SMOKE WITHIN 200 FT (61 M) OF THE ROCKET MOTOR OR LINEAR DEMOLITION CHARGE. (6-13), (6-14), (6-17)**
- **DO NOT OPERATE RF TRANSMITTERS NEAR ROCKET MOTOR OR LINEAR DEMOLITION CHARGE. (6-13), (6-14), (6-17)**

WARNINGS (Cont)

- **ELECTRICAL CONNECTIONS MUST BE DETACHED FROM BLASTING MACHINE, ROCKET MOTOR AND NEAR DEMOLITION CHARGE CONTAINER. (6-14)**
- **ENSURE PROTECTIVE CAP IS INSTALLED ON ROCKET MOTOR ELECTRICAL CONNECTOR AND THAT RETAINER SCREW OR QUICK RELEASE PIN IS REMOVED FROM HEAD OF ROCKET MOTOR. (6-14)**
- **KEEP DETONATOR END OF FUZE POINTED AWAY FROM PERSONNEL AND CHARGE. (6-17)**
- **MAKE SURE ELECTRICAL CONNECTIONS ARE DETACHED FROM BLASTING MACHINE, ROCKET MOTOR AND LINEAR DEMOLITION CHARGE CONTAINER. (6-17)**
- **WEAR FACE SHIELD OR SAFETY GOGGLES WHEN USING WIRE BRUSH AND CHEMICALS. (6-21)**
- **WEAR RESPIRATOR WHEN SPRAYING PRIMER OR PAINT. (6-21)**
- **ALWAYS WEAR SAFETY GOGGLES WHEN MIXING PAINTS, HANDLING SOLVENTS AND SPRAYING PAINTS. WEAR THE PROPER RESPIRATOR WHEN SPRAYING PAINT (EVEN FROM A SPRAY CAN AS IN THIS OPERATION) OR IF MORE THAN A QUART OF PAINT WILL BE BRUSHED. (6-21)**
- **PERSONS SENSITIVE TO THE SOLVENTS USED IN PRIMERS OR PAINTS SHOULD WEAR RUBBER OR PLASTIC GLOVES. (6-21)**
- **WEAR SAFETY GOGGLES WHEN USING SPRAY CAN OF PAINT. (6-22)**
- **INSTALL PIN PRIOR TO USE. REMOVE PIN PRIOR TO STORAGE. (6-24)**
- **TO PREVENT EYE DAMAGE AND LUNG DAMAGE, VENTILATE ROOM AND WEAR RESPIRATOR WHEN USING PAINT. (6-25)**
- **DO NOT UNSLING I-BEAM UNTIL IT IS SECURED TO C-CHANNELS. (J-4)**
- **ALL HATCHES MUST BE CLOSED WHEN MOUNTING MICLIC ONTO AVLB. (J-6)**
- **CHAIN BINDERS MAY SPRING BACK WHEN TIGHTENING. (J-11)**
- **WEAR HEARING PROTECTION AND ENSURE ALL CREW HATCHES ARE CLOSED AND VEHICLE EXHAUST FANS ARE OFF BEFORE LAUNCHING MICLIC. FAILURE TO DO SO MAY RESULT IN INJURY OR DEATH TO PERSONNEL FROM ROCKET FUMES AND HAZARDOUS NOISE. (J-12)**
- **USE LIFTING SLING WHEN REMOVING LAUNCHER AND I-BEAM. (J-13)**

CAUTIONS

- SAFE OPERATING TEMPERATURE RANGE FOR ROCKET MOTOR IS -4°F TO + 125°F (-40° to 52° C) SAFE STORAGE TEMPERATURE RANGE FOR ROCKET MOTOR IS -60°F TO + 160°F. (-51° to 71° C) (2-26)

- NEVER RAISE LAUNCHER RAIL BEYOND THE POINT WHERE THREADS START TO SHOW ON HYDRAULIC CYLINDER, ABOUT 75° ELEVATION OR THE HYDRAULIC CYLINDER MAY BE DAMAGED. (2-29), (2-32), (2-40)

- LAUNCHER SHOULD BE INSTALLED AND SECURELY FASTENED TO THE TRAILER CHASSIS BEFORE CHARGE CONTAINER IS LOADED. DO NOT ATTEMPT TO LIFT CONTAINER AND LAUNCHER TOGETHER ONTO TRAILER. ENSURE TRAILER BRAKES ARE ENGAGED. (2-32)

- WHEN USING FORKLIFT, DO NOT ATTEMPT TO LOAD LAUNCHER ONTO TRAILER FROM FRONT OR REAR OF TRAILER. (2-34)

- WHEN USING FORKLIFT, DO NOT ATTEMPT TO LOAD LINEAR DEMOLITION CHARGE CONTAINER ONTO LAUNCHER FROM FRONT OR REAR OF LAUNCHER. (2-39)

- DO NOT USE LAUNCHER'S LIFTING RINGS TO SECURE THE LINEAR DEMOLITION CHARGE TO THE LAUNCHER. CHARGE MUST BE SECURED DIRECTLY TO THE TRAILER. (2-49)

- ENSURE THAT THE ASSEMBLED FUZE CONNECTOR IS FULLY INSERTED INTO THE LINEAR DEMOLITION CHARGE FUZE HOLDER. (2-57)

- THE ARRESTING CABLE SHOULD NOT CROSS OVER THE CHARGE OR MALFUNCTION MAY OCCUR. (2-58)

- LIFT ROCKET MOTOR BY TUBE ONLY. DO NOT USE BRIDLE CABLES (MOD 3) TO LIFT OR HANDLE ROCKET MOTOR. THE BRIDLE CABLES ARE PRE-TENSIONED DURING MANUFACTURING FOR PROPER FLIGHT CHARACTERISTICS. (2-62)

- DO NOT PULL ON ROCKET MOTOR'S ELECTRICAL LEAD. (2-62)

- DO NOT TIGHTEN NYLON SCREWS ON FRONT PLATE OF ROCKET MOTOR (MK22 MOD 4 ROCKET MOTOR ONLY). (2-63)

- DO NOT REMOVE NYLON TIE ON ROCKET MOTOR'S ELECTRICAL LEAD ASSEMBLY. (2-63)

CAUTIONS (Cont)

- **DO NOT EXPOSE ROCKET MOTOR TO DIRECT SUNLIGHT LONGER THAN NECESSARY. IF ROCKET MOTOR HAS BEEN IN DIRECT SUN FOR A LONG PERIOD, PLACE IN SHADE AND KEEP WITHIN SAFE FIRING TEMPERATURE LIMITS FOR AT LEAST 6 HOURS BEFORE FIRING. DO NOT LAUNCH ROCKET WHEN ITS TEMPERATURE EXCEEDS UPPER SAFE FIRING LIMIT (125° F). ROCKET WILL BE CONSIDERED TO BE ABOVE THE UPPER TEMPERATURE LIMIT IF SURFACE IS TOO HOT TO KEEP A HAND ON IT. DO NOT TAMPER WITH OR ATTEMPT TO REPAIR ROCKET BEYOND INSERTING AND REMOVING THE BALL-LOCK PIN. (2-68)**

- **THE ELECTRICAL LEAD FROM THE ROCKET MOTOR MUST NOT BE TIED OR SECURED TO ANY PART OF THE LAUNCHER/LAUNCHER RAIL. (2-71)**

- **IF LAUNCHER IS TO BE TOWED WITH ROCKET ON LAUNCHER RAIL, MAKE SURE THAT THE TOWING VIBRATION DOES NOT RELEASE THE SWAY BRACE HAND KNOBS PREMATURELY. IF THE KNOBS ARE RELEASED DURING TOWING, THE ROCKET MOTOR WOULD BE ALLOWED TO SWING FREELY AND COULD DAMAGE THE LAUNCHER RAIL AND/OR ROCKET MOTOR. (2-71)**

- **IF THE MICLIC WILL BE TOWED LONG DISTANCES, ESPECIALLY OVER ROUGH TERRAIN TO THE BREACH, THEN LOCK THE LAUNCHER RAIL IN PLACE WITH THE BAL-LOCK PINS. HOWEVER, THE OPERATOR WILL NEED TO DISMOUNT BEFORE THE MINEFIELD AND RE-INSTALL THE BALL-LOCKPINS IN THE RAISE POSITION. (2-73)**

- **CABLE CAN FALL OUT OF THE CABLE SHEATH DURING TRANSPORTATION OF THE MICLIC OVER ROUGH TERRAIN. USE ELECTRICAL TAPE TO KEEP CABLES IN PLACE. (2-74)**

- **WHEN CONNECTING CABLE NO. 3 TO THE SAFETY SWITCH OR THE SAFETY SWITCH OUTPUT CONNECTOR TO RECEPTACLE NO. 1 ON THE LINE CHARGE RECEPTACLE BOX, ENSURE THAT THE CONNECTION IS TIGHT. PUSH BACK AND FORTH ON THE BACK OF THE CABLE CONNECTOR AFTER HAND TIGHTENING. IF THE BACK OF THE CONNECTOR FEELS LOOSE, UNSCREW THE CONNECTOR, CLEAN THE THREADS, AND RECONNECT. (2-78)**

- **WHEN CONNECTING CABLE NO. 3 TO THE SAFETY SWITCH OR THE SAFETY SWITCH OUTPUT CONNECTOR TO RECEPTACLE NO. 1 ON THE LINE CHARGE RECEPTACLE BOX, ENSURE THAT THE CONNECTION IS TIGHT. PUSH BACK AND FORTH ON THE BACK OF THE CABLE CONNECTOR. IF THE BACK OF THE CONNECTOR FEELS LOOSE, UNSCREW THE CONNECTOR, CLEAN THE THREADS AND RECONNECT. (2-81), (2-102)**

CAUTIONS (Cont)

- **FAILURE TO ENGAGE THE DETENTS WILL RESULT IN THE RAIL RAISING PAST THE 45-47° FIRING ANGLE. THE ROCKET MUST NOT BE LAUNCHED AT A HIGH ANGLE OF ELEVATION OR RESULTS MAY BE CATASTROPHIC. YOUR LIFE MAY DEPEND ON ENGAGING THE DETENTS. BALL-LOCK PINS MUST BE IN RAISE POSITION OR RAIL/ROCKET WILL NOT RAISE. (2-89), (2-113)**

- **BALL-LOCK PINS MUST BE IN RAISE POSITION OR RAIL/ROCKET WILL NOT RAISE. FAILURE TO RAISE ROCKET WOULD REQUIRE PERSONNEL TO LEAVE PROTECTED POSITION/ARMORED VEHICLE AND REPOSITIONED BALL-LOCK PINS TO RAISE POSITION. (2-89), (2-113)**

- **TRANSPORT FULLY ASSEMBLED ROCKET AND LINEAR DEMOLITION CHARGE SLOWLY ACROSS ROUGH TERRAIN OR MICLIC MAY FAIL TO FUNCTION PROPERLY AT BREECH POINT. (2-92), (2-115)**

- **WHEN TESTING THE OPERATION OF THE REMOTE TRAILER DISCONNECT DEVICE, ENSURE TRAILER IS NOT CONNECTED TO TOW VEHICLE. (2-108)**

- **LAUNCHING FROM A TRAILER WHICH IS NOT ATTACHED TO THE TOWING VEHICLE IS NOT A RECOMMENDED OPERATION. IF THE SITUATION NECESSITATES FIRING THIS WAY, ENSURE THAT THE PARKING BRAKES ARE ENGAGED AND THE WHEELS ARE CHOCKED. THIS WILL RESTRICT TRAILER MOVEMENT WHEN THE CABLE PULLS TIGHT. (2-127), (2-141)**

- **DO NOT ATTEMPT TO UNLOAD LINEAR DEMOLITION CHARGE CONTAINER FROM LAUNCHER FROM FRONT OR REAR OF LAUNCHER WHEN USING FORKLIFT. (2-162)**

- **NEVER RAISE LAUNCHER RAIL BEYOND THE POINT WHERE THREADS START TO SHOW ON HYDRAULIC CYLINDER. HYDRAULIC CYLINDER MAY BE DAMAGED. (2-160), (2-165)**

- **WHEN USING FORKLIFT, DO NOT ATTEMPT TO UNLOAD LAUNCHER FROM FRONT OR REAR OF TRAILER. (2-167)**

- **ENSURE CONTROL VALVE LEVER POINTS TO THE MANUAL RAISE/LOWER POSITION TO GUARANTEE CORRECT ALIGNMENT. (4-55)**

- **WHEN REMOVING ELBOW AT GATE VALVE, CARE MUST BE TAKEN NOT TO TWIST GATE VALVE AND IN THE PROCESS LOOSEN THE SEAL AT THE ACCUMULATOR. (4-87)**

- **CARE MUST BE USED IN REMOVING UNION TEE (19) TO AVOID DISTORTING LINES. (4-93)**

CAUTIONS (Cont)

- **MAKE SURE JAWS ARE LOCKED WITH THE LOCKING PIN (6)(SEE FIGURE 4.61) BEFORE REMOVING ROLLER ASSEMBLY. (4-113)**
- **DO NOT DIRECT WATER OR STREAM UNDER PRESSURE AGAINST UNSEALED ELECTRICAL SYSTEMS OR ANY EXTERIOR OPENING WHICH WILL DAMAGE A COMPONENT. (5-48)**
- **ENSURE ROCKET MOTOR AND LINE CHARGE HAVE ADEQUATE PROTECTION DURING TRANSPORTATION. ASSURE LAUNCHER COMPONENTS WILL NOT BE DAMAGED, CONTAMINATED OR OTHERWISE DEGRADED SO THAT THE COMPONENTS BECOME EITHER DANGEROUS OR THEIR USEFULNESS IS IMPAIRED. (5-50)**
- **ALL PERSONNEL INVOLVED IN THIS OPERATION, WHO ARE HANDLING THE LINEAR DEMOLITION CHARGE OR CLEANING THE RESIDUE, ARE REQUIRED TO WEAR PROTECTIVE GLOVES. (6-12)**
- **DO NOT LET THE CADMIUM POWDER RESIDUE COME IN CONTACT WITH THE SKIN OR EYES. DO NOT INGEST THE RESIDUE. (6-12)**
- **MAKE SURE ALL PROTECTIVE CAPS ARE INSTALLED ON ELECTRICAL RECEPTACLES BEFORE UNDERTAKING THIS OPERATION. (6-21)**
- **TO PREVENT TRACK FROM BEING THROWN, TRACK TENSION MUST BE CHECKED AND ADJUSTED IF VEHICLE IS TO BE OPERATED EXTENSIVELY WITHOUT BRIDGE. CONSULT TM 5-5420-226-10 (M48A5) OR TM 5-5420-202-10 (M60A1) FOR THESE PROCEDURES. (J-1)**
- **TO PREVENT DAMAGE TO LAUNCHER FRAME, DO NOT OVERTIGHTEN U-BOLT NUTS. (J-8)**
- **DO NOT USE AN ALUMINUM POLE AS A CHEATER BAR. (J-11)**

TECHNICAL MANUAL

No. TM 9-1375-215-13&P

HEADQUARTERS
DEPARTMENT OF THE ARMY
Washington, DC

TECHNICAL MANUAL

No. TM 08982A-14/2B

HEADQUARTERS
DEPARTMENT OF THE NAVY
U. S. MARINE CORPS
Washington, DC 20380-0001

Operator's, Unit, Direct Support, and General Support Maintenance Manual With Repair Parts and Special Tools List for MK 2 MOD 0, Mine Clearance System (Marine Corps) Mine Clearance Line Charge - MICLIC (Army)

REPORTING ERRORS AND RECOMMENDING IMPROVEMENTS

You can help improve this manual. If you find any mistakes, or if you know of a way to improve the procedures, please let us know. Mail your letter or DA Form 2028 (Recommended Changes to Publications and Blank Forms), or Form 2028-2 located in the back of this manual direct to: Director, Armament and Chemical Acquisition and Logistics Activity. ATTN: AMSTA-AC-NML, Rock Island, IL 61299-7630 Marine Corps users send NAVMC 10722 to: Commander, Marine Corps Logistics Bases, Code 850, Albany, GA 31705-1128. A reply will be furnished to you.

TABLE OF CONTENTS

PAGE

CHAPTER 1 INTRODUCTION 1-1

Section I. GENERAL INFORMATION 1-1
1.1 SCOPE OF MANUAL 1-1
1.2 MAINTENANCE FORMS, RECORDS, AND REPORTS 1-1
1.3 DESTRUCTION OF MATERIEL PREVENT ENEMY USE 1-1
1.3.1 DESTRUCTION OF ARMY MATERIAL 1-1
1.3.2 DESTRUCTION OF MARINE CORPS MATERIEL 1-1
1.4 PREPARATION FOR STORAGE OR SHIPMENT 1-2
1.5 REPORTING EQUIPMENT IMPROVEMENT RECOMMENDATIONS (EIR) 1-2
1.6 SAFETY, CARE AND HANDLING 1-3
1.7 CORROSION PREVENTION AND CONTROL 1-4

Section II. EQUIPMENT DESCRIPTION AND DATA 1-5
1.8 EQUIPMENT CHARACTERISTICS, CAPABILITIES, AND FEATURES 1-5
1.9 LOCATION AND DESCRIPTION OF MAJOR COMPONENTS 1-5
1.9.1 LINEAR DEMOLITION CHARGES 1-5
1.9.2 ROCKET MOTORS 1-11
1.9.3 MK 155 LAUNCHER MODS 0/1/2/3 1-13
1.9.4 TRAILER CHASSIS 1-21

TABLE OF CONTENTS (Cont)

PAGE

1.10 DIFFERENCES BETWEEN LAUNCHER MODELS 1-22
1.11 EQUIPMENT DATA 1-24

Section III. PRINCIPLES OF OPERATION 1-27
1.12 SYSTEM OVERVIEW 1-27
1.13 ELECTRICAL SYSTEM 1-27
1.13.1 MOD 0/1 ELECTRICAL SYSTEM 1-27
1.13.2 MOD 2/3 ELECTRICAL SYSTEM 1-29
1.14 LINEAR DEMOLITION CHARGE M1134 SERIES FUZE 1-32
1.15 HYDRAULIC SYSTEM 1-33
1.15.1 MOD 0/1 HYDRAULIC SYSTEM 1-33
1.15.2 MOD 2/3 HYDRAULIC SYSTEM 1-36

CHAPTER 2 OPERATING INSTRUCTIONS 2-1

Section I. DESCRIPTION AND USE OF OPERATOR'S CONTROLS AND INDICATORS 2-1
2.1 INTRODUCTION TO USE OF MICLIC. 2-1

Section II. OPERATOR PREVENTIVE MAINTENANCE CHECKS AND SERVICES 2-10
2.2 PREVENTIVE MAINTENANCE CHECKS AND SERVICES (PMCS) 2-10
2.3 PMCS DEFINITIONS 2-10
2.4 PMCS PROCEDURES 2-11

Section III. OPERATION UNDER USUAL CONDITIONS CHECKS 2-25
2.5 GENERAL COMMENTS ABOUT USE OF MICLIC 2-25
2.6 INITIAL ADJUSTMENTS, CHECKS, AND SELF-TESTS 2-27
2.6.1 PRESSURE CHECK 2-27
2.7 ASSEMBLY AND PREPARATION OF MICLIC FOR USE 2-32
2.7.1 INSTALLING LAUNCHER ON TRAILER 2-32
2.7.2 INSTALLING LINEAR DEMOLITION CHARGE CONTAINER ON LAUNCHER 2-38
2.7.3 INSTALLING FUZE ON LINEAR DEMOLITION CHARGE 2-50
2.7.4 INSTALLING NYLON COVER ON LINEAR CHARGE 2-59
2.7.5 UNPACKING AND INSPECTION OF ROCKET MOTOR 2-60
2.7.6 INSTALLING ROCKET MOTOR ON LAUNCHER RAIL 2-68
2.7.7 ROCKET ATTACHMENT TO LINEAR DEMOLITION CHARGE 2-73
2.7.8 MOD 0/1 LAUNCHER ELECTRICAL CONNECTIONS 2-78
2.7.9 MOD 0/1 LAUNCHER CONTINUITY CHECK 2-83
2.7.10 SECURE TEST EQUIPMENT AND LAUNCHER RAIL/ROCKET 2-86
2.7.11 MOD 0/1 LAUNCHER FINAL PREPARATIONS FOR DEPLOYMENT 2-87
2.7.12 MOD 2/3 LAUNCHER. INSTALLING REMOTE TRAILER DISCONNECT DEVICE (ARMY ONLY) 2-93

TABLE OF CONTENTS (Cont)

PAGE

2.7.13 MOD 2/3 LAUNCHER ELECTRICAL CONNECTIONS (ARMY ONLY) 2-96
2.7.14 MOD 2/3 LAUNCHER CONTINUITY CHECK (ARMY ONLY) 2-100
2.7.15 SECURE TEST EQUIPMENT AND LAUNCHER RAIL AND ROCKET 2-111
2.7.16 MOD 2/3 FINAL PREPARATION FOR DEPLOYMENT (ARMY ONLY) 2-112
2.8 OPERATING PROCEDURES 2-116
2.8.1 PREFIRE CHECKING PROCEDURES 2-116
2.8.2 SURFACE DANGER ZONES FOR M58 AND M68 2-117
2.8.3 FIRING MOD 0/1 LAUNCHER FROM AN ARMORED TOW VEHICLE 2-121
2.8.4 FIRING MOD 0/1 LAUNCHER FROM OTHER THAN ARMORED TOW VEHICLE 2-125
2.8.5 FIRING MOD 2/3 LAUNCHER FROM AN ARMORED TOW VEHICLE 2-132
2.8.6 FIRING MOD 2/3 LAUNCHER FROM OTHER THAN ARMORED TOW VEHICLE 2-139
2.8.7 GENERAL MISFIRE PROCEDURES FOR ROCKET MOTOR 2-148
2.8.8 GENERAL MISFIRE PROCEDURES FOR LINEAR DEMOLITION CHARGE 2-150
2.8.9 MISFIRE TROUBLESHOOTING 2-152
2.8.10 RESETTING LINEAR ACTUATOR IN TRAILER DISCONNECT DEVICE AFTER OPERATION (MOD 2/3) 2-152
2.8.11 RECOVERING M68A2 (INERT) LINEAR CHARGE ONLY 2-155
2.8.12 REMOVING LINEAR DEMOLITION CHARGE CONTAINER FROM LAUNCHER 2-159
2.8.13 REMOVING LAUNCHER FROM TRAILER 2-164

Section IV OPERATION UNDER UNUSUAL CONDITIONS 2-170
2.9 CROSSWINDS AND HEADWINDS 2-170
2.10 UPGRADES AND DOWNGRADES 2-170
2.11 RIVER FORDING 2-170
2.12 WOODED AREAS 2-170
2.13 NUCLEAR, BIOLOGICAL, AND CHEMICAL (NBC) ENVIRONMENT 2-170
2.14 SNOW, SLEET, AND FREEZING RAIN 2-171
2.15 TEMPERATURES BELOW -25°F (-32°C) 2-171
2.16 DEPLOYMENT DURING EXTREME COLD WEATHER CONDITIONS (FOR MARINE CORPS ONLY) 2-171
2.17 DEPLOYMENT DURING EXTREME HOT WEATHER CONDITIONS 2-172
2.18 BLOWING DIRT AND SAND 2-172
2.19 FIRING WITH M200A1 or M353 WHEELED TRAILER DETACHED FROM TOW VEHICLE 2-172

TABLE OF CONTENTS (Cont)

	PAGE
CHAPTER 3 OPERATOR MAINTENANCE	3-1
Section I. LUBRICATION INSTRUCTIONS	3-1
3.1 LUBRICATION INSTRUCTIONS	3-1
Section II. TROUBLESHOOTING PROCEDURES	3-5
3.2 INTRODUCTION	3-5
3.3 FUZE CANNOT BE ASSEMBLED ON LINEAR DEMOLITION CHARGE	3-5
3.3.1 CORRECTIVE ACTION	3-5
3.4 INERT FUZE DAMAGED DURING DEPLOYMENT	3-7
3.4.1 INSPECTION	3-7
3.4.2 CONDITION	3-7
3.4.3 CONDITION	3-8
3.4.4 CONDITION	3-8
3.5 CONTINUITY TEST TROUBLESHOOTING GUIDE MOD 0/1, REMOVAL OF TAPERED PIN	3-8
3.6 MOD 2/3 CONTINUITY TEST TROUBLESHOOTING GUIDE	3-10
Section III. MAINTENANCE PROCEDURES	3-14
3.7 SERVICING ELECTRICAL CONNECTORS AND RECEPTACLES	3-14
3.8 REPACK M68A2 INERT LINEAR DEMOLITION CHARGE	3-14
CHAPTER 4 UNIT MAINTENANCE	4-1
Section I. REPAIR PARTS, TOOLS; SPECIAL TOOLS; TEST, MEASUREMENT, AND DIAGNOSTIC EQUIPMENT (TMDE); AND SUPPORT EQUIPMENT	4-1
4.1 COMMON TOOLS AND EQUIPMENT	4-1
4.2 SPECIAL TOOLS, TMDE, AND SUPPORT EQUIPMENT	4-1
4.3 REPAIR PARTS	4-1
4.4 GENERAL	4-1
Section II. SERVICE UPON RECEIPT	4-2
4.5 SERVICE UPON RECEIPT OF MATERIEL	4-2
Section III. TROUBLESHOOTING PROCEDURES	4-8
4.6 HYDRAULIC ASSEMBLIES TROUBLESHOOTING	4-8
4.7 ELECTRICAL ASSEMBLIES TROUBLESHOOTING	4-11
Section IV MAINTENANCE PROCEDURES	4-28
4.8 GENERAL	4-28
4.9 BLEED HYDRAULIC SYSTEM	4-28
4.10 REPLACE LAUNCHER RAIL	4-31
4.11 REPLACE LAUNCHER RAIL SUPPORT	4-35
4.12 REPLACE CABLE SHEATHS	4-40
4.13 REPAIR OR REPLACE HAND KNOB ASSEMBLY	4-42

TABLE OF CONTENTS (Cont)

PAGE

4.14 REPLACE DETENT ASSEMBLY 4-45
4.15 REPLACE ROCKET RELEASE MECHANISM 4-47
4.16 CLINOMETER 4-50
4.17 PREPARE HYDRAULIC SYSTEM FOR COMPONENT REPLACEMENT 4-50
4.18 REPLACE HYDRAULIC CYLINDER 4-56
4.19 REPLACE HYDRAULIC ACCUMULATOR 4-59
4.20 REPLACE HAND PUMP 4-64
4.21 REPLACE HYDRAULIC CONTROL VALVE 4-70
4.22 REPLACE HYDRAULIC PRESSURE GAGE 4-77
4.23 REPLACE HYDRAULIC CHECK VALVE 4-80
4.24 REPLACE FLUID DAMPENER 4-82
4.25 REPAIR HYDRAULIC HOSE, LINES, AND FITTINGS 4-86
4.26 REPLACE LANYARD 4-96
4.27 REPLACE HYDRAULIC SOLENOID VALVE (MOD 2 AND MOD 3) 4-98
4.28 MOD 2/3 LAUNCHERS REMOTE TRAILER QUICK DISCONNECT DEVICE 4-100
4.29 SELECTOR SWITCH ASSEMBLY (MOD 2/3) 4-116
4.30 TOUCH-UP PAINTING 4-117

CHAPTER 5 DIRECT SUPPORT AND GENERAL SUPPORT MAINTENANCE 5-1

Section I. REPAIR PARTS; TOOLS; SPECIAL TOOLS; TEST, MEASUREMENT, AND DIAGNOSTIC EQUIPMENT (TMDE); AND SUPPORT EQUIPMENT 5-1
5.1 COMMON TOOLS AND EQUIPMENT 5-1
5.2 SPECIAL TOOLS, TMDE, AND SUPPORT EQUIPMENT 5-1
5.3 REPAIR PARTS 5-1

Section II. MAINTENANCE PROCEDURES 5-1
5.4 GENERAL 5-1
5.5 REPAIR/PAINTING LAUNCHER ASSEMBLY 5-1
5.6 REPAIR LAUNCHER RAIL AND SUPPORT AND LAUNCHER FRAME WELDMENT ASSEMBLY 5-4
5.7 SAFETY SWITCH ASSEMBLY REMOVAL, REPAIR, INSPECTION AND REPLACEMENT 5-5
5.7.1 REMOVE SAFETY SWITCH ASSEMBLY 5-5
5.7.2 SAFETY SWITCH ASSEMBLY REPAIR 5-8
5.7.3 VISUAL INSPECTION AND CONTINUITY TESTING OF THE LAUNCHER SAFETY SWITCH ASSEMBLY 5-8
5.7.4 REPLACEMENT OF THE SAFETY SWITCH ASSEMBLY 5-10
5.8 TEST AND ADJUST LAUNCHER SAFETY SWITCH ASSEMBLY 5-12
5.9 SELECTOR SWITCH BOX REPAIR (MOD 0/1) 5-14
5.10 REPAIR SELECTOR SWITCH ASSEMBLY FOR MOD 2 AND MOD 3. 5-18
5.11 ELECTRICAL CABLE MAINTENANCE 5-30
5.12 REPAIR HYDRAULIC CYLINDER 5-33

TABLE OF CONTENTS (Cont)

PAGE

5.13 REPAIR HYDRAULIC HAND PUMP 5-36
5.14 REPAIR HYDRAULIC CONTROL VALVE 5-39
5.15 CHARGING OF ACCUMULATOR 5-42

Section III PREPARATION FOR STORAGE OR SHIPMENT 5-46
5.16 PREPARATION FOR ADMINISTRATIVE STORAGE 5-46
5.16.1 AUTHORIZATION AND READINESS 5-46
5.16.2 DEFINITION OF ADMINISTRATIVE STORAGE 5-46
5.16.3 MAINTENANCE RECORDS 5-46
5.16.4 PREPARATION FOR STORAGE 5-46
5.16.5 SECURITY 5-46
5.16.6 STORAGE SITE 5-47
5.16.7 STORAGE PLAN 5-47
5.16.8 MAINTENANCE SERVICES AND INSPECTION 5-47
5.16.9 AUXILIARY EQUIPMENT AND BASIC ISSUE ITEMS 5-47
5.16.10 CORRECTIONS OF SHORTCOMINGS AND DEFICIENCIES 5-47
5.16.11 LUBRICATION 5-47
5.16.12 GENERAL CLEANING, PAINTING, AND PRESERVATION 5-48
5.16.13 M155 LAUNCHER PACKAGING PROCESS FOR STORAGE OR SHIPMENT 5-48
5.16.14 TRAILER PACKAGING PROCESS FOR STORAGE OR SHIPMENT 5-49
5.17 CARE OF EQUIPMENT IN ADMINISTRATIVE STORAGE 5-49
5.17.1 MAINTENANCE SERVICES 5-49
5.17.2 INSPECTION 5-49
5.17.3 EXERCISING 5-50
5.17.4 ROTATION 5-50
5.18 REMOVAL FROM ADMINISTRATIVE STORAGE 5-50
5.18.1 PREPARATION OF EQUIPMENT 5-50
5.18.2 SERVICING 5-50
5.19 TRANSPORTATION OF MINE CLEARANCE LAUNCHER (MARINE CORPS ONLY) 5-50

CHAPTER 6 AMMUNITION MAINTENANCE 6-1

Section I. SERVICE UPON RECEIPT OF MATERIEL 6-1
6.1 SERVICE UPON RECEIPT OF MATERIEL 6-1
6.1.1 INSPECTION 6-1
6.1.2 UNPACKING 6-2
6.1.3 REPACKING 6-2
6.1.4 OPERATOR/UNIT MAINTENANCE M58A3/A4 LINEAR DEMOLITION CHARGE INSPECTION 6-2
6.1.5 DIRECT SUPPORT/GENERAL SUPPORT/AMMUNITION SUPPLY POINT M58A3/A4 LINEAR DEMOLITION CHARGE INSPECTION 6-3

TABLE OF CONTENTS (Cont)

PAGE

6.1.6 OPERATOR/UNIT MAINTENANCE M68A2 INERT LINEAR DEMOLITION CHARGE INSPECTION 6-5
6.1.7 DIRECT SUPPORT/GENERAL SUPPORT/AMMUNITION SUPPLY POINT M68A2 INERT LINEAR DEMOLITION CHARGE INSPECTION 6-6
6.1.8 OPERATOR/UNIT MAINTENANCE MK 22 MOD 3 ROCKET MOTOR INSPECTION 6-7
6.1.9 OPERATOR/UNIT MAINTENANCE MK 22 MOD 4 ROCKET MOTOR INSPECTION 6-8
6.1.10 DIRECT SUPPORT/GENERAL SUPPORT/AMMUNITION SUPPLY POINT MK 22 MOD 3 ROCKET MOTOR INSPECTION 6-9
6.1.11 DIRECT SUPPORT/GENERAL SUPPORT/AMMUNITION SUPPLY POINT MK 22 MOD 4 ROCKET MOTOR INSPECTION 6-10

Section II. MAINTENANCE 6-11
6.2 OPERATOR/UNIT MAINTENANCE 6-11
6.2.1 REMOVING CORROSION FROM RECEPTACLES ON LINEAR DEMOLITION CHARGE JUNCTION BOX 6-11
6.2.2 REMOVING CADMIUM POWDER RESIDUE FROM INTERIOR OF LINEAR DEMOLITION CHARGE CONTAINER 6-11
6.2.3 REMOVING CORROSION FROM ROCKET MOTOR BUTTON LUG BAND(S) 6-13
6.2.4 REPACKING OF FIELD-RETURNED ROCKET MOTOR 6-14
6.2.5 REPACKING OF FIELD-RETURNED LINEAR DEMOLITION CHARGE 6-16
6.3 DIRECT SUPPORT/AMMUNITION SUPPLY POINT MAINTENANCE 6-20
6.3.1 REMOVING CORROSION FROM LINEAR DEMOLITION CHARGE CONTAINER 6-20
6.3.2 REAPPLYING MARKINGS TO LINEAR DEMOLITION CHARGE CONTAINER OR ROCKET MOTOR PACKAGING BOX 6-22
6.3.3 ROCKET MOTOR PACKING BOX INSPECTION AND RECONDITIONING 6-25
6.3.4 JUNCTION BOX CONTINUITY CHECK 6-27

APPENDIX A REFERENCES A-1
A.1 ARMY REGULATIONS A-1
A.2 FIELD MANUALS A-1
A.3 FORMS A-1
A.4 MARINE CORPS PUBLICATIONS A-2
A.5 MODIFICATION WORK ORDERS A-2
A.6 PAMPHLETS A-2
A.7 SPECIFICATIONS A-2
A.8 TECHNICAL BULLETINS A-2
A.9 TECHNICAL MANUALS A-2

TABLE OF CONTENTS (Cont)

PAGE

APPENDIX B MAINTENANCE ALLOCATION CHART B-1

Section I. INTRODUCTION B-1
B.1 GENERAL B-1
B.2 MAINTENANCE FUNCTIONS B-1
B.3 EXPLANATION OF COLUMNS IN THE MAC B-3
B.4 EXPLANATION OF COLUMNS IN TOOL AND TEST EQUIPMENT REQUIREMENTS B-4
B.5 EXPLANATION OF COLUMNS IN REMARKS B-4
B.6 AMMUNITION MAC B-4

Section II. MAINTENANCE ALLOCATION CHART B-5

Section III. TOOL AND TEST, EQUIPMENT REQUIREMENTS FOR MICLIC B-7

Section IV. REMARKS B-8

APPENDIX C COMPONENTS OF END-ITEM AND BASIC ISSUE ITEMS LISTS C-1

Section I. INTRODUCTION C-1
C.1 SCOPE C-1
C.2 GENERAL C-1
C.3 EXPLANATION OF COLUMNS C-1

Section II. COMPONENTS OF END-ITEM C-3

Section III. BASIC-ISSUE-ITEM - LAUNCHER C-5

Section IV. TEST MEASUREMENT AND DIAGNOSTIC EQUIPMENT C-10

APPENDIX D ADDITIONAL AUTHORIZED LIST D-1

D.1 SCOPE D-1

APPENDIX E EXPENDABLE/DURABLE SUPPLIES AND MATERIALS LIST E-1

Section I. INTRODUCTION E-1
E.1 SCOPE E-1
E.2 EXPLANATION OF COLUMNS E-1

Section II. EXPENDABLE/DURABLE SUPPLIES AND MATERIALS LIST E-2

TABLE OF CONTENTS (Cont)

PAGE

APPENDIX F OPERATOR'S, UNIT, DIRECT SUPPORT AND GENERAL SUPPORT MAINTENANCE MANUAL INCLUDING REPAIR PARTS AND SPECIAL TOOLS LIST F-1

Section I. INTRODUCTION..... F-1
F.1 SCOPE F-1
F.2 GENERAL..... F-1
F.3 EXPLANATION OF COLUMNS (Sections II and III) F-2
F.4 EXPLANATION OF COLUMNS (Section IV)..... F-7
F.5 SPECIAL INFORMATION..... F-8
F.6 HOW TO LOCATE REPAIR PARTS..... F-9
F.7 ABBREVIATIONS F-9

Section II REPAIR PARTS LIST F-10

Section III. SPECIAL TOOLS LIST F-63

Section IV. CROSS-REFERENCE INDEXES F-64

APPENDIX G ILLUSTRATED LIST OF MANUFACTURED ITEMS G-1

G.1 INTRODUCTION G-1
G.2 MANUFACTURED ITEMS INDEX.....G-1
G.3 HYDRAULIC PUMP UNIT REPAIR TOOL.....G-2
G.4 LAUNCHER RAIL ALIGNMENT TOOL.....G-3
G.5 LAUNCHER RAIL HYDRAULIC AND ELECTRICAL SYSTEMS PROTECTIVE COVER.....G-6
G.6 LINEAR ACTUATING CYLINDER REPAIR TOOL G-10
G.7 SHIPPING FRAME SKID FOR MINE CLEARING LINE CHARGE LAUNCHER.....G-11
G.8 MOUNTING HARDWARE FOR MOUNTING THE MICLIC LAUNCHER ON THE ARMORED VEHICLE LAUNCHED BRIDGE.....G-14

APPENDIX H STOWAGE AND SIGN GUIDE..... H-1

H.1 SCOPE H-1
H.1.1 MOD 0/1 LAUNCHER H-1
H.1.2 MOD 2/3 LAUNCHER H-2

APPENDIX I OPERATING INSTRUCTION CHARTS I-1

CHART I.1 MK 2 MOD 0 MINE CLEARANCE SYSTEM I-1
CHART I.2 LOAD/UNLOAD LAUNCHER..... I-3
CHART I.3 LOAD/UNLOAD LINEAR DEMOLITION CHARGE I-5
CHART I.4 TO MANUAL RAISE LAUNCH RAIL..... I-6

TABLE OF CONTENTS (Cont)

PAGE

CHART I.5 TO LOWER LAUNCH RAIL I-8
CHART I.6 SECURING LAUNCHER I-11
CHART I.7 LAUNCH RAIL DOWN CONTINUITY CHECKS I-12
CHART I.8 LAUNCH RAIL RAISED TO 45-47 DEGREES CONTINUITY CHECK I-14
CHART I.9 ARRESTING CABLE INSPECTION AND FUZE CONNECTION I-16
CHART I.10 ROCKET MOTOR INSTALLATION I-20
CHART I.11 REMOTE RAISE RAIL I-23
CHART I.12 VEHICLE SPEEDS AND DEPLOYMENT I-24
CHART I.13 DEPLOYMENT OF CHARGE I-25
CHART I.14 SAFETY I-26

APPENDIX J INSTRUCTIONS FOR CONVERTING THE ARMORED VEHICLE LAUNCHED BRIDGE (AVLB) TO THE ARMORED VEHICLE LAUNCHED MINE CLEARING LINE CHARGE (AVLM) J-1

J.1 PREPARATION J-1
J.2 INSTALLING FABRICATED HARDWARE ONTO AVLB J-3
J.3 PMCS AND PRESSURE CHECKOUT, PRIOR TO LOADING J-6
J.4 INSTALLING MICLIC LAUNCHER TO AVLB J-6
J.5 ROUTING OF ELECTRICAL CABLES J-9
J.6 LOADING LINEAR DEMOLITION CHARGE CONTAINER ONTO LAUNCHER. INSTALLATION OF FUZE ONTO LINE CHARGE J-9
J.7 INSTALLATION AND CHECKING OF ROCKET J-11
J.8 ELECTRICAL CONNECTIONS AND CONTINUITY CHECK J-11
J.9 PREPARATION FOR DEPLOYMENT J-11
J.10 OPERATING PROCEDURES J-12
J.11 REMOVAL OF LINEAR DEMOLITION CHARGE CONTAINER AND RELOAD PROCEDURES J-12
J.12 REMOVAL OF LAUNCHERS AND FABRICATED HARDWARE J-13

APPENDIX K POLYURETHANE CHEMICAL AGENT RESISTANT COATING K-1

K.1 INTRODUCTION K-1
K.2 APPLICATION K-2
K.3 SAFETY K-4
K.4 MEDICAL REQUIREMENTS K-8

LIST OF ILLUSTRATIONS

PAGE

Figure 1.1 Full External View of Equipment 1-0
Figure 1.2 Linear Demolition Charge, Packed 1-6
Figure 1.3 Linear Demolition Charge, Deployed 1-7
Figure 1.4 Assembly of Explosive Linear Charge Section 1-7
Figure 1.5 Stop Link 1-8
Figure 1.6 Explosive Linear Charge Section 1-9
Figure 1.7 M1134 Series Fuze 1-9
Figure 1.8 Arresting Cable Section 1-10
Figure 1.9 MK 22 MOD 3 Rocket Motor 1-11
Figure 1.10 MK 22 MOD 4 Rocket Motor 1-12
Figure 1.11 MK 155 MOD 0/1/2/3 Mine Clearance Launcher 1-13
Figure 1.12 Alignment Pins 1-14
Figure 1.13 Clinometer 1-14
Figure 1.14 Ball-Lock Safety Pins 1-15
Figure 1.15 Selector Switch Box and Cable Assemblies for MK 155 MOD 0 and MOD 1-16
Figure 1.16 M34 Blasting Machine 1-17
Figure 1.17 M51 Blasting Cap Test Set 1-17
Figure 1.18 Selector Switch Assembly, Receptacle and Cables for MOD 2 and MOD 3 1-18
Figure 1.19 Remote Trailer Disconnect Device for MOD 2/3 1-19
Figure 1.20 Hydraulic System Control Panel 1-20
Figure 1.21 M200A1 Tracked Trailer 1-22
Figure 1.22 Differences Between Launcher Models 1-23
Figure 1.23 MOD 0/1 Electrical System 1-28
Figure 1.24 MOD 2/3 Electrical System 1-31
Figure 1.25 M1134 Fuze 1-32
Figure 1.26 MOD 0/1 Hydraulic System 1-33
Figure 1.27 Manual Raise Launcher Rail 1-34
Figure 1.28 Manual Lower Launcher Rail 1-34
Figure 1.29 Remote Raise Launcher Rail 1-35
Figure 1.30 MOD 2/3 Hydraulic System 1-36
Figure 1.31 Manual Raise Operation 1-37
Figure 1.32 Manual Lower Operation 1-38
Figure 1.33 Remote Raise Launch Rail 1-39
Figure 2.1 Hydraulic System Control Panel 2-1
Figure 2.2 MOD 0/1 Electrical System 2-3
Figure 2.3 MOD 2/3 Electrical System 2-4
Figure 2.4 M34 Blasting Machine and M51 Blasting Cap Test Set 2-7
Figure 2.5 Launcher Rail, Supports, and Launcher Frame Weldment Assembly 2-8
Figure 2.6 Launcher Rail 2-12
Figure 2.7 Launcher Rail Supports 2-13
Figure 2.8 Ball Lock Pins 2-14
Figure 2.9 Safety Switch 2-14
Figure 2.10 Frame and Attaching Hardware 2-15

LIST OF ILLUSTRATIONS (Cont)

PAGE

Figure 2.11 Rocket Release Mechanism 2-16
Figure 2.12 Coupler (Trailer Disconnect Device (Army Only) 2-17
Figure 2.13 Hydraulic Assembly 2-18
Figure 2.14 Hydraulic Cylinder 2-18
Figure 2.15 Hand Pump 2-20
Figure 2.16 Hydraulic Control Valve 2-21
Figure 2.17 Detent Positions on Launcher Supports 2-27
Figure 2.18 Launcher Hydraulic Pressure Checkout 2-28
Figure 2.19 Launcher Detent Checkout 2-30
Figure 2.20 Installing Launcher on M200A1 Trailer with Crane 2-34
Figure 2.21 Proper Installation of Launcher on M353 Trailer with Forklift 2-35
Figure 2.22 Installing Launcher on M353 Trailer with Crane 2-37
Figure 2.23 Raising Launcher Rail 2-40
Figure 2.24 Ball-Lock Pin in Locked Position 2-41
Figure 2.25 Loading Linear Charge Container onto Launcher 2-48
Figure 2.26 Securing Linear Charge Container to Launcher/Trailer 2-50
Figure 2.27 Fuze and Linear Charge Connections 2-51
Figure 2.28 Position of Arming Wire and Electrical Cable for Taping 2-53
Figure 2.29 Installation of Fuze 2-54
Figure 2.30 Pin Fuze Connectors in Place 2-55
Figure 2.31 Mating Fuze Connector Parts 2-55
Figure 2.32 Checking Fuze Connector Joint 2-57
Figure 2.33 Proper Position of Fuze in Holder 2-58
Figure 2.34 Positioning of Arresting Cable and Nylon Sock 2-59
Figure 2.35 Installation of Protective Nylon Cover 2-60
Figure 2.36 Raise Launcher Rail for Rocket Installation 2-62
Figure 2.37 Unpacking Rocket Motor 2-63
Figure 2.38 MK 22 MOD 3 Rocket Motor Components 2-65
Figure 2.39 MK 22 MOD 4 Rocket Motor Components 2-67
Figure 2.40 Installing Rocket on Launcher Rail and Check-out 2-69
Figure 2.41 Rocket Motor Release Mechanism Check-out 2-70
Figure 2.42 Procedure to Secure Rocket to Sway Braces with Tiedowns 2-72
Figure 2.43 Attachment of Linear Demolition Charge to Rocket Motor 2-74
Figure 2.44 Positioning of the Bridle Cable on the Linear Charge 2-75
Figure 2.45 Fasten Bridle Cable to Rocket Harness Connector 2-76
Figure 2.46 Secure Launcher Rail and Rocket Motor for Transport over Rough Terrain 2-77
Figure 2.47 Selector Switch Box 2-79
Figure 2.48 M51 Blasting Cap Test Set 2-80
Figure 2.49 M34 Blasting Machine 2-81
Figure 2.50 Electrical Connections for Launcher and Demolition Charge 2-83
Figure 2.51 Procedure to Test Rocket and Charge Circuits 2-84
Figure 2.52 Safety Switch Open and Closed Positions 2-85
Figure 2.53 Removal and Storage of Shorting Pug 2-87
Figure 2.54 Final Preparations to Deploy from MOD 0 and MOD 1 Launcher 2-89
Figure 2.55 Selector Switch Assembly and Lanyard Handle 2-91

LIST OF ILLUSTRATIONS (Cont)

PAGE

Figure 2.56 Installing Remote Disconnect Device on Trailer Lunette 2-94
Figure 2.57 Inverting the Lunette 2-95
Figure 2.58 Remote Trailer Disconnect Device 2-96
Figure 2.59 Install W5 Branched Cable Assembly 2-97
Figure 2.60 Connecting Cables to Linear Demolition Charge and Launcher 2-99
Figure 2.61 M51 Blasting Cap Test Set Check-out 2-101
Figure 2.62 Operation of M34 Blasting Machine 2-102
Figure 2.63 Electrical Connections for Line Charge and Launcher 2-103
Figure 2.64 Safety Switch Open and Closed Positions 2-104
Figure 2.65 Remove Remote Trailer Device Travel Lock 2-105
Figure 2.66 Testing Electrical Connections for MK 155 MOD 2/3 Launchers (Rail Down) 2-106
Figure 2.67 Testing Electrical Connections for MK 155 MOD 2/3 Launchers (Rail Up) 2-107
Figure 2.68 Connecting Trailer to Towing Vehicle 2-110
Figure 2.69 Unlocked Position of the Trailer Disconnect Device 2-111
Figure 2.70 Preparing MK 155 MOD 2/3 Launchers for Deployment 2-114
Figure 2.71 Surface Danger Zone for M58 Line Charge 2-118
Figure 2.72 Area F and Fragmentation Zone for M58 Linear Demolition Charge 2-119
Figure 2.73 Surface Danger Zone for M68 Training Charge 2-120
Figure 2.74 Firing Arrangement for Armored Vehicle and MICLIC 2-122
Figure 2.75 Visually Check how Line Charge is Deployed 2-124
Figure 2.76 Components to Fire Rocket and Linear Demolition Charge 2-125
Figure 2.77 Configuration for Restraining Launcher and Trailer When Detached From Towing Vehicle 2-129
Figure 2.78 Components to Fire Rocket and Line Charge 2-131
Figure 2.79 Ensure Line Charge is Properly Extended 2-137
Figure 2.80 Selector Switch Assembly and M34 Blasting Machine 2-138
Figure 2.81 Configuration for Restraining Launcher and Trailer When Detached From Towing Vehicle 2-142
Figure 2.82 Electrical Hook-up for Trailer not Connected to Host Vehicle 2-143
Figure 2.83 Selector Switch Assembly and M34 Blasting Machine 2-146
Figure 2.84 Reset Actuator of Disconnect Device 2-153
Figure 2.85 Close and Reset Jaws of Trailer Disconnect Device 2-154
Figure 2.86 Trailer Disconnect Device Travel Lock 2-154
Figure 2.87 Disconnecting M68 Line Charge From MK 155 Launcher 2-156
Figure 2.88 Disassembly of the M68 Fuze Assembly 2-157
Figure 2.89 Disconnect Line Charge from Rocket Bridle Cable 2-158
Figure 2.90 Disconnect Charge and MK 155 Electrical Connections 2-160
Figure 2.91 Prepare for Removal of Charge Container from MK 155 Launcher 2-161
Figure 2.92 Removal of Charge Container from MK 155 Launcher 2-163
Figure 2.93 Removal of MK 155 Launcher from Trailer 2-166
Figure 2.94 Lower MK 155 Launcher Rail 2-169
Figure 3.1 Lubrication Points for Launcher Assembly - Top View 3-2
Figure 3.2 Lubrication Points for Launcher Assembly - Side View 3-2
Figure 3.3 Maintenance of Remote Trailer Disconnect 3-4

LIST OF ILLUSTRATIONS (Cont)

PAGE

Figure 3.4 Troubleshooting Inert Fuze 3-6
Figure 3.5 Re-arming Fuze for M68 3-7
Figure 3.6 Front End of Fuze 3-7
Figure 3.7 Charge Fuze Connector 3-8
Figure 3.8 Repacking of Arresting Cable 3-17
Figure 3.9 Repacking the Linear Charge 3-18
Figure 3.10 Location of Line Charge Components 3-20
Figure 4.1 Unpackaging MK 155 Launcher 4-4
Figure 4.2 Inspect MK 155 Launcher Components 4-5
Figure 4.3 End View of MOD 0 and MOD 1 Hydraulic Components 4-6
Figure 4.4 End View of MOD 2 and MOD 3 Hydraulic Components 4-6
Figure 4.5 Top View of Hydraulic Components With Cover Removed 4-11
Figure 4.6 MOD 0/1 Electrical System 4-11
Figure 4.7 MOD 2/3 Electrical System 4-12
Figure 4.8 Receptacle Connector and P1 Plug Connector 4-13
Figure 4.9 Safety Switch Assembly Wiring Diagram in the Launcher Up Position 4-15
Figure 4.10 Selector Switch Box 4-15
Figure 4.11 C3 Connector 4-16
Figure 4.12 Selector Switch Assembly 4-17
Figure 4.13 A1J2 Socket 4-18
Figure 4.14 A1J1 Plug 4-18
Figure 4.15 Connector C1 4-20
Figure 4.16 Connector C2 4-20
Figure 4.17 W6P2 Socket 4-21
Figure 4.18 W6P1 Plug 4-22
Figure 4.19 W5P1 Socket 4-23
Figure 4.20 W5J1 Plug 4-23
Figure 4.21 W5P2 and W5P3 Sockets 4-24
Figure 4.22 W3P1 Socket 4-25
Figure 4.23 W3P2 Socket 4-26
Figure 4.24 Prepare to Raise or Lower Rail 4-30
Figure 4.25 Removal and Installation of Launcher Rail 4-33
Figure 4.26 Replace Launcher Rail Support 4-37
Figure 4.27 Rocket Bridle Cable Sheaths 4-42
Figure 4.28 Replace or Repair Hand Knob Assembly 4-44
Figure 4.29 Remove and Replace Detent Assembly 4-46
Figure 4.30 Rocket Release Assembly 4-48
Figure 4.31 Components of Hydraulic System for MOD 0 and MOD 2/3 Launchers 4-53
Figure 4.32 Removal and Installation of Hydraulic Cylinder and Components 4-59
Figure 4.33 Hydraulic Accumulator for MOD 0 and MOD 1 Launchers 4-61
Figure 4.34 Hydraulic Accumulator for MOD 2 and MOD 3 Launchers 4-63
Figure 4.35 Remove Hydraulic Hand Pump for MOD 0 and MOD 1 Launchers 4-66
Figure 4.36 Replace Hand Pump for MOD 0 and MOD 1 Launchers 4-67
Figure 4.37 Removal of Hand Pump for MOD 2 and MOD 3 Launchers 4-68

LIST OF ILLUSTRATIONS (Cont)

PAGE

Figure 4.38 Replacement of Hand Pump for MOD 2 and MOD 3 Launchers 4-69
Figure 4.39 Removal and Replacement of Hydraulic Control Valve for MOD 0 and MOD 1 Launchers 4-72
Figure 4.40 Removal and Replacement of Hydraulic Control Valve of MOD 2 and MOD 3 Launchers 4-75
Figure 4.41 Removal and Installation of Pressure Gage for MOD 0 and MOD 1 Launchers 4-78
Figure 4.42 Removal and Installation of Pressure Gage for MOD 2 and MOD 3 Launchers 4-80
Figure 4.43 Removal and Replacement of Hydraulic Check Valve 4-82
Figure 4.44 Removal and Replacement of Fluid Dampener for MOD 0 and MOD 1 Launchers 4-84
Figure 4.45 Removal and Replacement of Fluid Dampener for MOD 2 and MOD 3 Launchers 4-85
Figure 4.46 Remove, Inspect, and Replace Hydraulic Hoses, Lines, and Fittings for MOD 0 and MOD 1 Launchers (Rear View) 4-87
Figure 4.47 Remove, Inspect and Replace Hydraulic Hose, Lines, and Fittings for MOD 0 and MOD 1 Launchers (Top View) 4-90
Figure 4.48 Remove and Inspect Lines and Fittings for MOD 2 and MOD 3 Launchers 4-92
Figure 4.49 Replace Hoses, Lines and Fittings for MOD 2 and MOD 3 Launchers 4-95
Figure 4.50 Remove and Replace Lanyard 4-97
Figure 4.51 Remove and Replace Hydraulic Solenoid Valve for MOD 2 and MOD 3 Launchers 4-99
Figure 4.52 Quick Disconnect Device 4-101
Figure 4.53 Remote Trailer Disconnect 4-102
Figure 4.54 Inverting the Lunette 4-103
Figure 4.55 Reset Actuator of Disconnect Device 4-104
Figure 4.56 Close and Reset Jaws of Trailer Disconnect Device 4-105
Figure 4.57 Trailer Disconnect Device Travel Lock 4-106
Figure 4.58 Install W5 Branched Cable Assembly 4-107
Figure 4.59 W5 Branched Cable Assembly (Left Rear View) 4-108
Figure 4.60 Trailer Quick Disconnect Device (Side View) 4-109
Figure 4.61 Trailer Quick Disconnect Device (Top View) 4-110
Figure 4.62 Components of Trailer Disconnect Device 4-112
Figure 4.63 Coupler, Drawbar, Ring 4-114
Figure 4.64 Remote Trailer Disconnect 4-115
Figure 4.65 Selector Switch Assembly 4-116
Figure 4.66 Painting Markers on Launcher Supports 4-119
Figure 5.1 Remove or Replace Safety Switch Assembly 5-7
Figure 5.2 Safety Switch Assembly Detailed Diagram 5-9
Figure 5.3 Remove or Replace Safety Switch Assembly 5-12
Figure 5.4 Test and Adjust Safety Switch Assembly 5-14
Figure 5.5 Selector Switch Box Parts Breakdown 5-16
Figure 5.6 Selector Switch Box Wiring Diagram 5-17
Figure 5.7 Selector Switch Assembly MOD 2/MOD 3 5-19

LIST OF ILLUSTRATIONS (Cont)

PAGE

Figure 5.8 Selector Switch Assembly MOD 2/3 5-20
Figure 5.9 Wiring Diagram; Selector Switch Assembly MOD 2/3 5-21
Figure 5.10 Selector Switch Assembly, Internal View 5-25
Figure 5.11 75 Foot Cable Assembly 5-30
Figure 5.12 Repair Hydraulic Cylinder 5-35
Figure 5.13 Repair Hydraulic Hand Pump 5-37
Figure 5.14 Repair Hydraulic Control Valve 5-42
Figure 5.15 Charging the Accumulator 5-44
Figure 6.1 Repacking Field-Returned Rocket Motor 6-16
Figure 6.2 Repacking Field-Returned Linear Demolition Charge 6-17
Figure 6.3 Remove Fuze from Line Charge Connector 6-19
Figure 6.4 HE Linear Charge Container Markings 6-23
Figure 6.5 Inert Linear Charge Container Markings 6-24
Figure 6.6 Marking for Rocket Motor 6-24
Figure 6.7 MK 22 MOD 4 Rocket Motor Container Markings 6-26
Figure 6.8 Junction Panel 6-27
Figure C.1 Components of End-item C-3
Figure C.2a Basic-issue-Item - Launcher C-5
Figure C.2b Components of Basic-Issue-item - Launcher C-6
Figure C.2c Components of Basic-Issue-item - Launcher C-7
Figure C.2d Basic-Issue-Item - Launcher C-8
Figure C.2e Components of Basic-Issue-item - Launcher C-9
Figure C.3 Components of Test and Measurement Diagnostic Equipment C-10
Figure F.1 MK 155 Launcher, Mine Clearing (82A5052A0000) MOD 0 and (82A5052D000) MOD 3 ..... F-10
Figure F.2 Contents, Container F-12
Figure F.3 Lanyard Assembly F-15
Figure F.4 Launcher, Rail Assembly F-16
Figure F.5 Port and Starboard Telescoping Tube Assembly F-22
Figure F.6 Hydraulics Assembly: MODS 0 ..... F-26
Figure F.7 Hydraulics Assembly MOD 2/3 ..... F-28
Figure F.8 Hydraulics Assembly: Pressure Gage F-36
Figure F.9 Hydraulics Assembly: Directional Control Linear Valve F-38
Figure F.10 Linear Actuating Cylinder Assembly F-40
Figure F.11 Linear Actuating Cylinder F-42
Figure F.12 Pumping Unit, Hydraulic Hand Pump F-44
Figure F.13 Cable Assembly - Switch, Electrical F-48
Figure F.14 Selector Switch Assembly (MOD 2/3) F-50
Figure F.15 Armament System Electrical Control Box Electrical (MOD 2/3) F-52
Figure F.16 W5 Power Cable Assembly F-54
Figure F.17 W3 Power Cable Assembly F-56
Figure F.18 W6 Power Cable Assembly F-57
Figure F.19 Coupler, Drawbar F-58
Figure G.1 Hydraulics Pump Unit Repair Tools G-2
Figure G.2 Launcher Rail Alignment Tool G-4
Figure G.3 Launcher Rail and Hydraulic and Electrical Systems Protective G-6

LIST OF ILLUSTRATIONS (Cont)

PAGE

Figure G.4 Linear Actuating Cylinder Repair Tools....G-10
Figure G.5 Shipping Frame Skid for Mine Clearing Line Charge Launcher....G-11
Figure G.6 C-Channel used for Mounting the Mine Clearing Line Charge Launcher on the Armored Vehicle Launched Bridge....G-15
Figure G.7 I-Beam used for Mounting the Mine Clearing Line Charge Launcher on the Armored Vehicle Launched Bridge....G-16
Figure G.8 U-Bolt and Plate used for Mounting the Mine Clearing Line Charge Launcher on the Armored Vehicle Launched Bridge....G-17
Figure H.1 Storage Box on MK 155 MOD 0/1 Mine Clearing Line Charge Launcher....H-1
Figure H.2 Storage Boxes on MK 155 MOD 2/3 Mine Clearing Line Charge Launcher....H-3
Figure J.1 Installing Fabricated Hardware onto AVLB....J-3
Figure J.2 I-Beam....J-4
Figure J.3 Lifting I-Beam....J-4
Figure J.4 Mounting I-Beam....J-5
Figure J.5 Mounting Launchers to I-Beam....J-6
Figure J.6 Attach Lifting Sling to Handling/Lifting Equipment....J-7
Figure J.7 Secure the Center Crossmember of Launcher to Bridge Seat....J-7
Figure J.8 Secure Rear of Launcher....J-8
Figure J.9 Positioning Linear Charge Onto Launcher....J-10
Figure J.10 Removal of Linear Demolition Charge Container and Reload Procedures....J-12

LIST OF TABLES

PAGE

Table 1.1 Detailed Data for MICLIC Sub-Systems....1-24
Table 2.1 Hydraulic System....2-2
Table 2.2 Electrical System Components....2-5
Table 2.3 M34 Blasting Machine and M51 Blasting Cap Test Set....2-7
Table 2.4 Launcher Rail, Supports, and Launcher Frame Weldment Assembly....2-8
Table 2.5 Operator Preventive Checks and Services....2-12
Table 2.6 Proper Test Pressure at High Ambient Temperatures....2-28
Table 2.7 inspection of M58A3/A4 Linear Demolition Charge Container....2-42
Table 2.8 Inspection of M68A2 Inert Linear Demolition Charge Container....2-43
Table 2.9 Inspection of Components of M58A3/A4 Linear Demolition Charge Container....2-45
Table 2.10 Inspection of M68A2 Inert Linear Demolition Charge Container Interior....2-47
Table 2.11 MK 22 MOD 3 Rocket Motor Inspection....2-64
Table 2.12 MK 22 MOD 4 Rocket Motor Inspection....2-66
Table 3.1 Lubrication Requirements for MICLIC Launcher....3-1
Table 3.2 Required Man-Hour Requirements for Lubrication....3-1
Table 3.3 Information About Lubricants for MICLIC....3-3
Table 3.4 Lubrication Requirements for Remote Trailer Disconnect....3-4

LIST OF TABLES (Cont)

PAGE

Table 3.5 MOD 0/1 Continuity Test Troubleshooting 3-9
Table 3.6 MOD 2/3 Continuity Test Troubleshooting 3-11
Table 3.7 Inspection of a Used (Deployed)(Launched) M68 Inert Linear Demolition Charge 3-15
Table 4.1 Troubleshooting Procedures for the Hydraulic Assemblies 4-8
Table 4.2 Safety Switch Assembly Wiring Continuity Check with Launcher Rail in DOWN Position 4-14
Table 4.3 Safety Switch Assembly Wiring Continuity Check with Launcher Rail Raised 4-14
Table 4.4 Selector Switch Box Continuity Check 4-17
Table 4.5 P3/P4 Leads Continuity Check 4-19
Table 4.6 A1P2 Receptacle Continuity Check 4-19
Table 4.7 A1J1 Receptacle Continuity Check 4-19
Table 4.8 A1J1 Receptacle Continuity Check 4-20
Table 4.9 Electrical Cable No 3 Continuity Check 4-21
Table 4.10 Cable Assembly W6 Continuity Check 4-22
Table 4.11 Cable Assembly W5 Continuity Check 4-25
Table 4.12 Cable Assembly W3 Continuity Check 4-26
Table 5.1 Accumulator Pressurization (Pounds Per Square Inch) 5-45
Table 6.1 Ammunition Information 6-1
Table 6.2 Operator/Unit Maintenance M58A3/A4 Linear Demolition Charge Inspection Criteria 6-2
Table 6.3 DS/GS/ASP M58A3/A4 Linear Demolition Charge Inspection Criteria 6-4
Table 6.4 Operator/Unit Maintenance M68A2 Inert Linear Demolition Charge Inspection Criteria 6-5
Table 6.5 DS/GS/ASP M68A2 Inert Linear Demolition Charge Inspection Criteria 6-6
Table 6.6 Operator/Unit Maintenance MK 22 MOD 3 Rocket Motor Inspection Criteria 6-7
Table 6.7 Operator/Unit Maintenance MK 22 MOD 4 Rocket Motor Inspection Criteria 6-8
Table 6.8 DS/GS/ASP MK 22 MOD 3 Rocket Motor Inspection Criteria 6-9
Table 6.9 DS/GS/ASP MK 22 MOD 4 Rocket Motor Inspection Criteria 6-10
Table B.1 Maintenance Allocation Chart B-5
Table B.2 Tools and Test Equipment B-7
Table B.3 Remarks B-8
Table C.1 Components of End-Item C-4
Table C.2 Basic-Issue-Item - Launcher C-5
Table C.3 Test Measurement and Diagnostic Equipment C-10
Table E.1 Expendable/Durable Supplies and Materials List E-2
Table F.1 Line Charge, Launcher Kit, Trailer; MK 155; DWG 82A5052"X"0000 ..... F-11
Table F.2 Contents, Container; DWG 82A5052D0035 ..... F-13
Table F.3 Lanyard Assembly; DWG 82A5052A0025 ..... F-15
Table F.4 Launcher Rail Assembly; DWG 82A5052B0225 ..... F-17
Table F.5 Starboard and Port Telescoping tube Assembly; DWG 82A5052B0304 and 82A5052B0305 ..... F-23
Table F.6 Hydraulics Assembly, MOD 0; DWG 82A5052A0500 ..... F-27

LIST OF TABLES (Cont)

PAGE

Table F.7 Hydraulic Assembly, Mod 3; DWG 82A5052D0564 ..... F-29
Table F.8 Hydraulics Assembly; Pressure Gage; DWG 82A5052A0500 and 82A5052D0564 ..... F-37
Table F.9 Hydraulics Assembly: Directional Control Linear Valve; DWG 82A5052A0500 and 82A5052D0564 ..... F-39
Table F.10 Linear Actuating Cylinder Assembly; DWG 82A5052A0569 ..... F-41
Table F.11 Linear Actuating Cylinder; DWG 82A5052A0503 ..... F-43
Table F.12 Pumping Unit, Hydraulic Hand Pump; 82A5052A0502 ..... F-45
Table F.13 Cable Assembly-Switch, Electrical; DWG 82A5052A0800 ..... F-49
Table F.14 Selector Switch Assembly; DWG 82A5052A2100 ..... F-51
Table F.15 Armament System, Electrical Control Box; 82A5052A2112 ..... F-53
Table F.16 W5 Power Cable Assembly; 82A5052A2103 ..... F-55
Table F.17 W3 Power Cable Assembly; 82A5052A2102 ..... F-56
Table F.18 W6 Power Cable Assembly; 82A5052A2104 ..... F-57
Table F.19 Coupler, Drawbar; 82A5052A2000 ..... F-59
Table F.20 Bulk Item List F-62
Table F.21 Special Tools List F-63
Table F.22 National Stock Number Index F-63
Table F.23 Part Number Index F-67
Table F.24 Figure and Item Number Index F-78
Table G.1 Material Required for Launcher Rail Alignment Tool G-3
Table G.2 Personnel and Man Hours Required for Launcher Rail Alignment Tool G-3
Table G.3 Material Required for Launcher Rail Hydraulic and Electrical Systems Protective Cover G-6
Table G.4 Personnel and Man Hours Required for Launcher Rail Hydraulic and Electrical Systems Protective Cover G-6
Table G.5 Materials Required for Shipping Frame for MICLIC G-12
Table G.6 Material Required for Mounting Hardware for Mounting the Mine Clearing Line Charge Launcher on the Armored Vehicle Launched Bridge G-14
Table H.1 Accessories, Tools and Equipment in Storage Container at Towing End of Launcher Frame H-2
Table H.2 Accessories, Tools and Equipment Stored in the Charge Container H-2
Table H.3 Accessories Stored in the Spare Parts Kit H-2
Table H.4 Equipment in Storage Case at Rear of Launcher Frame Next to Hydraulic Controls H-3
Table K.1 Respiratory Protection Equipment Requirements K-6

LIST OF CHARTS

PAGE

Chart I.1 MK 2 MOD O Mine Clearance System I-1
Chart I.2 Load/Unload Launcher I-3
Chart I.3 Load/Unload Linear Demolition Charge I-5
Chart I.4 To Manual Raise Launch Rail I-6
Chart I.5 To Lower Launch Rail I-8
Chart I.6 Securing Launcher I-11
Chart I.7 Launch Rail Down Continuity Checks I-12
Chart I.8 Launch Rail Raised to 45-47 Degrees Continuity Checks I-14
Chart I.9 Arresting Cable Inspection and Fuze Connection I-16
Chart I.10 Rocket Motor Installation I-20
Chart I.11 Remote Raise Rail I-23
Chart I.12 Vehicle Speeds and Deployment I-24
Chart I.13 Deployment of Charge I-25

HOW TO USE THIS MANUAL

This Technical Manual (TM) provides information for use in operating and maintaining the Mine Clearing Charge (MICLIC) at the Unit Direct Support and maintenance levels. This manual has been prepared using engineering drawings, specifications, military standards, and recommendations from support engineering. Users of this manual must first familiarize themselves with the manual by browsing through the pages. The following information will provide a description of the entire manual and detailed information on how to use it.

A. CONTENT OF MANUAL

1. This manual consists of the following:

    a. Cover

    b. Promulgation Letter

    c. List of Effective Pages

    d. Record of Changes

    e. Safety Summary

    f. Table of Contents

    g. How to Use This Manual

    h. Chapters 1 through 6

    i. Appendices A through K

    j. Index

2. This manual is divided as follows:

    a. **Chapter 1, Introduction.** Contains general information, equipment description, and technical principles of operation.

    b. **Chapter 2, Operating Instructions.** Contains a functional description of the controls and indicators. There are detailed procedures for preforming Preventive Maintenance Checks and Services (PMCS), and operating under usual and unusual conditions.

    c. **Chapter 3, Operator Maintenance.** Explains the operator's responsibilities for maintaining the MICLIC.

    d. **Chapter 4, Unit Maintenance.** Contains maintenance instructions that are the responsibility of the unit maintenance technician, as authorized by the Maintenance Allocation Chart (MAC).

e. **Chapter 5, Direct Support and General Support Maintenance.** Contains maintenance instructions that are the responsibility of DS maintenance technicians as authorized by the MAC.

f. **Chapter 6, Ammunition Maintenance.** Contains maintenance instructions that are the responsibility of the ammunition maintenance technicians as authorized by the MAC.

g. **Appendix A, References.** Contains a list of all publications used or mentioned in this manual.

h. **Appendix B, Maintenance Allocation Chart (MAC).** Contains a list of maintenance functions and identifies the level of maintenance authorized to perform them. There are tables for finding tool and test equipment requirements and also a remarks column table.

i. **Appendix C, Components of End-item and Basic Issue Items Lists.** Contains a list of Components of End Items and their respective illustrations for each item. Includes a list of Basic Issue Items with illustrations to assist the user. The explanation of columns is an intricate part of the components of end item and explains the columns found in the tables.

j. **Appendix D, Additional Authorization List (AAL).** Contains listing of tools authorized to the user that are not included in the Modified Table of Equipment (MTOE). It is not applicable in this manual.

k. **Appendix E, Expendable/Durable Supplies and Maintenance List.** Contains a list of expendable/durable supplies and materials used to support the MICLIC.

l. **Appendix F, Operator's, Unit, Direct Support and General Support Maintenance Manual Including Repair Parts and Special Tools List.** Contains an illustrated list of Repair Parts, Special Tools, and other special support equipment required for the performance of Unit Direct Support and maintenance of the MICLIC.

m. **Appendix G, Illustrated List of Manufactured Items.**

n. **Appendix H, Stowage and Sign Guide.**

o. **Appendix I, Operating Instruction Charts.**

p. **Appendix J, Instructions for Converting the AVLB to the AVLM.**

q. **Appendix K, Polyurethane Chemical Agent Resistant Coating.**

B. HOW TO ACCESS INFORMATION QUICKLY

Pages are numbered consecutively within each chapter. Each page number is prefixed with the chapter number. For example, page 5 of Chapter 2 is numbered 2-5. Each chapter is divided into sections.

C. HOW TO USE PROCEDURES

When procedures require special supporting illustrations, the illustrations are on the page before, same page, or page after the text. When text refers the user to an illustration by figure number, the reference is made by a key number and then the item referred to in the illustration is called out by that key number. Additionally, the item may be briefly described in the legend. For example:

Remove ball-lock pins (1) (see Figure 2.23) from launcher rail supports (2) and leave ball-lock pins (1) hanging for this operation.

Legend:

(1) Ball-Lock Pins
(2) Launcher Rail Support
(3) Pump Valve Lever
(4) Hydraulic Control Valve Lever
(5) Pump Handle
(6) Detents

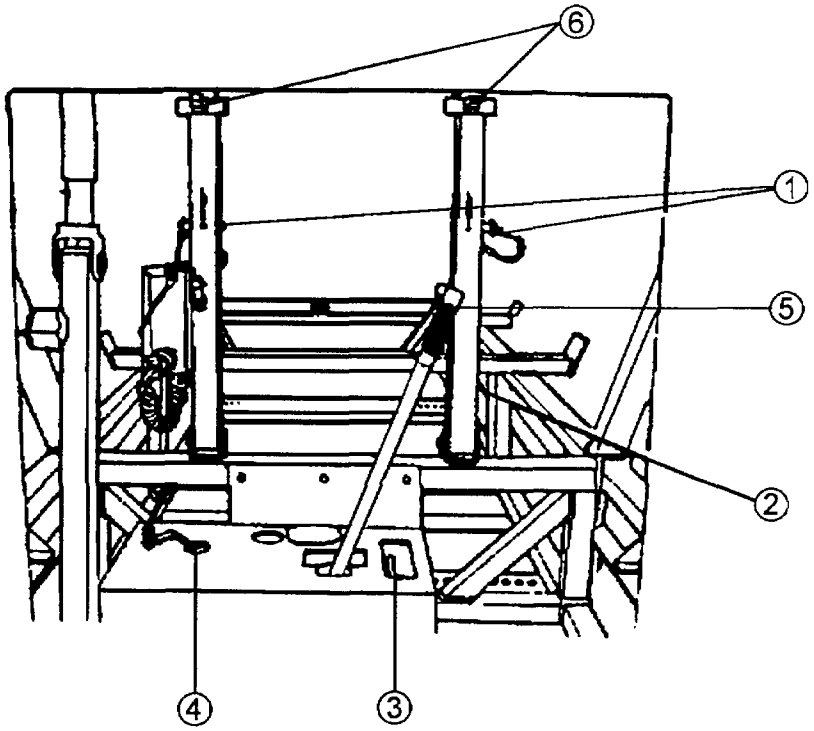

Figure 2.23. Raising Launcher Rail

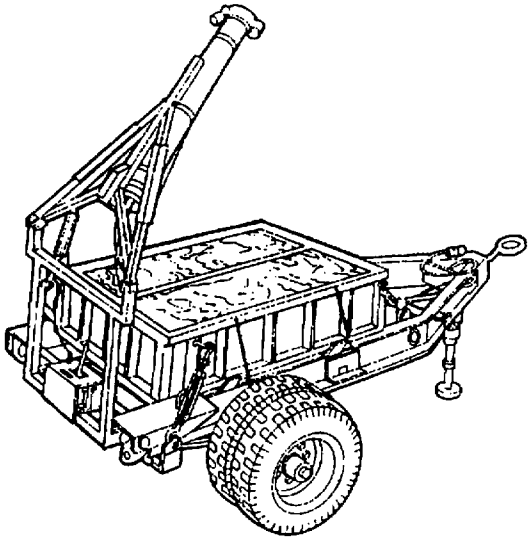

MICLIC System Mounted on Modified M200A1 Wheeled Trailer

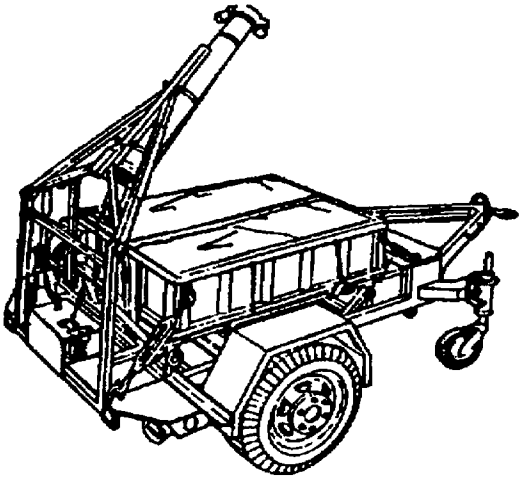

MK 2 Mine Clearance System Mounted on M353 Trailer

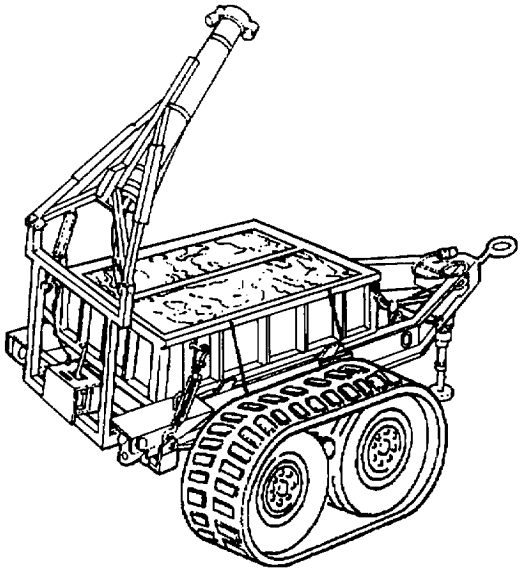

MICLIC System Mounted on Modified M200A1 Tracked Trailer

Figure 1.1. Full External View of Equipment

CHAPTER 1
INTRODUCTION

Section I. GENERAL INFORMATION

1.1 SCOPE OF MANUAL. This manual contains instructions for Operator, Unit, and Direct Support (DS) maintenance of the Mine Clearance Line Charge (MICLIC). MICLIC is the Army's acronym for their mine clearing system. The Marine Corps' single-shot, mine clearing system is designated as the MK 2 MOD 0 Mine Clearing System. In this Joint Army/Marine Corps manual the term MICLIC will be used to refer to both the MICLIC or the MK 2 MOD 0 system unless otherwise stated. The primary purpose of MICLIC is to clear a safe, continuous path for vehicles through minefields composed of pressure fuzed, single impulse, non-blast hardened mines. It can be deployed against both hasty and deliberate minefields.

1.2 MAINTENANCE FORMS, RECORDS, AND REPORTS.

a. Department of the Army forms and procedures used for equipment maintenance will be those prescribed by DA PAM 738-750, The Army Maintenance Management System (TAMMS). Accidents involving injury to personnel or damage to materiel will be reported on DA Form 285, U.S. Army Accident Report, IAW AR 385-40, Accident Reporting and Records. Explosives and ammunition malfunctions will be reported IAW AR 75-1, Malfunctions Involving Ammunition and Explosives.

b. Marine Corps personnel shall prepare and submit Malfunction and Deficiency Reports IAW Marine Corps Order 8025.1C. A distribution list is provided in the Order.

1.3 DESTRUCTION OF MATERIEL TO PREVENT ENEMY USE.

1.3.1 DESTRUCTION OF ARMY MATERIEL To prevent enemy use of MICLIC, follow instructions given in TM 43-0002-24, Destruction of Equipment to Prevent Enemy Use. This includes directions for destruction of the trailer, linear demolition charge, launcher, rocket motor and technical documentation.

1.3.2 DESTRUCTION OF MARINE CORPS MATERIEL

a. When capture or abandonment of the line charge or rocket to any enemy is imminent, the responsible unit commander must make the decision to either destroy the equipment or to render it inoperative. Based on this decision, orders are issued which cover the desired extent of destruction.

NOTE

OBSERVE APPROPRIATE SAFETY PRECAUTIONS.

b. Selecting a point of destruction that will cause the greatest obstruction or danger to enemy movement while minimizing the hazard or inconvenience to friendly troops from obstruction, fragmentation or ricocheting which may occur incidental to the destruction.

c. Damage the demolition charge or rocket so that they cannot be restored to usable condition in the combat zone either by repair or by cannibalization. Adequate destruction requires that parts essential to the operation of the charge or rocket, including essential components, equipment and accessories be destroyed or damaged beyond repair.

WARNING

WHEN DESTROYING THE ROCKET BY BURNING, REMOVE THE RETAINING SCREW (MOD 3) OR QUICK RELEASE PIN (MOD 4) TO PREVENT ROCKET FLIGHT WHEN THE PROPELLANT GRAINS IGNITE.

d. Destruction of essential parts, followed by burning, will usually be sufficient to render the demolition charge or rocket useless.

e. When lack of time or personnel prevents destruction of the total line charge or rocket, priority must be given to those parts most difficult to replace. Equally important, when more than one line charge or rocket requires destruction, the identical essential parts must be destroyed on each line charge or rocket so that the enemy cannot reconstruct one complete unit from several damaged ones.

f. Use an incendiary grenade when resorting to the burning method.

1.4 PREPARATION FOR STORAGE OR SHIPMENT. See Chapter 5 for administrative storage of the launcher and trailer . See Chapter 6 for packaging the MK 22 MOD3/4 rocket motor and M58A3/4 High Explosive (HE), linear demolition charge. They will be stored at an Ammunition Supply Point (ASP) when not being retained as basic load. The inert M68A2 charge may be kept at the unit level or stored at the ASP, as convenient. Only authorized ammunition personnel will be allowed to store and ship the linear demolition charge and rocket motor. The MICLIC has been approved for External Air Transport (EAT) in certain configurations IAW FM 55-450-3, Multiservice Helicopter External Air Transport: Basic Operations and Equipment.

1.5 REPORTING EQUIPMENT IMPROVEMENT RECOMMENDATIONS (EIR). If the MICLIC has deficiencies in materiel, design, or nonconforming conditions which limit or prohibit the item from fulfilling its intended purpose, submit a Product Quality Deficiency Report (PQDR) SF 368 in accordance with MCO 4855.10_, Product Quality Deficiency Report, and TM 4700-15/1_, Equipment Records procedures. Mail it to the appropriate Army or Marine Corps address below. Send information copy to MARCORSYSCOM.

a. Army personnel submit form to:
Commander
U.S. Army Armament Research, Development and Engineering Center
ATTN: AMSTA-AR-QAW-A (R) /Customer Feedback Center
Rock Island, IL 61299- 7300
Fax: Commercial: 309-782-6653/DSN: 793-6653
E-Mail: qawqdrs@ria-emh2.army.mil

b. Marine Corps personnel submit form to:

(1) Commander
Code 808-1
Marine Corps Logistics Bases
814 Radford Blvd
Albany, GA 31704-1128
Fax: Commercial: 912-439-5631/DSN: 567-5631
E-Mail: mbp@ala.usmc.mil or via Naval Message

(2) Commander
Code CSLE
MARCORSYSCOM
2033 Barnett Ave Suite 315
Quantico, VA 22134-5010
Fax: Commercial: 703-784-3292/DSN: 278-2242
E-mail: quantico.usmc.mil

1.6 SAFETY, CARE AND HANDLING. Observe the following precautions when handling the rocket motor and linear demolition charge. Review warnings at the front of this technical manual before every firing.

a. If the retainer screw (MOD 3) or quick release pin (MOD 4) is not installed into the rocket motor prior to firing, the rocket motor will initiate and burn on the launch rail. The burning rocket motor may catch the linear demolition charge on fire. The linear demolition charge can detonate when exposed to fire or extreme heat.

b. When a burning linear demolition charge is encountered, whether deployed (laying on the ground) or undeployed (in the container), evacuate the area until the linear demolition charge burns completely or detonates.

c. Be careful when unpackaging and installing the rocket motor on the launch rail so the electrical lead at the rear of the rocket motor is not pulled loose, cut, frayed or in anyway damaged. Damage to the electrical lead will cause the rocket motor to misfire.

d. The linear demolition charge is susceptible to a buildup and release of static electricity during deployment. This can cause the linear demolition charge to detonate prematurely (in the air). A misfired linear demolition charge (deployed but undetonated) is also susceptible to static electricity.

e. A white powdery residue may be present on or around the fuze holder located in the rear corner of the linear demolition charge container. This residue is Cadmium powder, a hazardous substance. Handle it as follows:

(1) Do not let the residue come in contact with the skin or eyes. Do not ingest the residue.

(2) Use gloves, clean the residue from the fuze holder and container with a damp rag.

(3) Dispose of the gloves and rag as hazardous waste.

(4) Wash hands thoroughly after procedure is complete.

f. DA PAM 385-64 contains additional precautions on the proper safety, care and handling of ammunition.

1.7 CORROSION PREVENTION AND CONTROL.

a. Corrosion Prevention and Control (CPC) of Army materiel is a continuing concern. Report any corrosion problems with MICLIC so that the problem can be corrected and improvements can be made to prevent the problem in future items.

b. While corrosion is typically associated with rusting of metals, corrosion can also include deterioration of other materials, such as rubber and plastic. Unusual cracking, softening, swelling, or breaking of these materials may be a corrosion problem.

c. If a corrosion problem is identified, report it on Standard Form 368, Product Quality Deficiency Report. Use keywords such as "corrosion," "rust," "deterioration," or "cracking" to ensure that the information is identified as a CPC problem.

(1) Army personnel submit form to:
Commander
U.S. Army Armament Research, Development and Engineering Center
ATTN: AMSTA-AR-QAW-A (R)/Customer Feedback Center
Rock Island, IL 61299-7300
Fax: Commercial: 309-782-6653/DSN: 793-6653
E-Mail: qawqdrs@ria-emh2.army.mil

(2) Marine Corps personnel submit form to:
Commander (Code 4082)
NAVSURFWARCENDIV
300 Highway 361
Crane IN 47522-5001
Fax: Commercial: 812-854-5081/DSN: 482-5081
E-Mail: WSJ56@smtp.nwscc.sea06.navy.mil

Section II. EQUIPMENT DESCRIPTION AND DATA

1.8 EQUIPMENT CHARACTERISTICS, CAPABILITIES, AND FEATURES

a. The MICLIC is a single shot, mine clearance system capable of clearing a path up to 14 meters wide (7 meters on left and right of linear charge) and 100 meters long through a minefield. MICLIC is effective against single-impulse, pressure-type, nonblast hardened antitank mines and mechanically actuated antipersonnel mines. The MICLIC creates an over-pressure which causes pressure-type fuzes to function. Mines not detonated by the overpressure of the linear demolition charge will usually be uncovered or blown from the ground. The major components of the MICLIC are the linear demolition charge, the rocket motor, the launcher, and the trailer.

b. The MICLIC can be:

(1) Towed over rough terrain and deployed in various climates and weather conditions.

(2) Can be remotely initiated either from inside the towing vehicle (if armored) or from a covered position of at least 75 feet (23 meters) away from the MICLIC.

(3) Can be reused and reloaded with a new rocket motor and linear demolition charge in 30 minutes.

(4) Can be remotely disconnected from the towing vehicle using the trailer remote disconnect device (MOD 2/3).

1.9 LOCATION AND DESCRIPTION OF MAJOR COMPONENTS

1.9.1 LINEAR DEMOLITION CHARGES

1.9.1.1 M58A3/A4 Linear Demolition Charge. The linear demolition charge (1) is packed in a steel container (2) which serves as both a storage and transportation container (see Figure 1.2). At the rear, exterior of the container is an electrical receptacle junction box (3). The junction box is used to connect the launcher safety switch, linear demolition charge electrical lead, and rocket motor electrical connector. At the rear, interior corner of the container is the fuze holder (4). The fuze (5), and bungee straps (6), which are used to hold the hard cover (7) in place, are packed in the center of the charge. The spare parts kit (8), which consists of a shorting plug(s) used to perform electrical system continuity checks, is taped to the rear interior wall of the container.

Legend:

(1) Linear Demolition Charge
(2) Container
(3) Junction Box
(4) Fuze Holder
(5) Fuze
(6) Bungee Straps
(7) Cover
(8) Spare Parts Kit

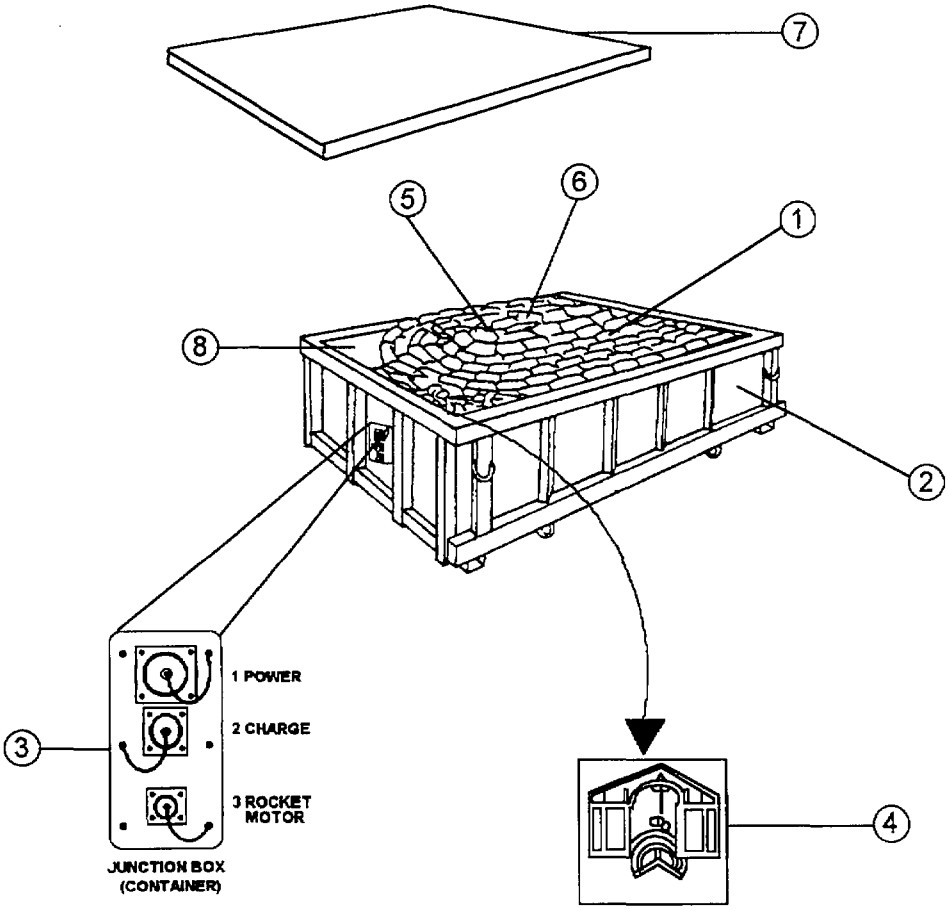

Figure 1.2. Linear Demolition Charge, Packed

1.9.1.2 Linear Demolition Charge. Total length of the linear demolition charge is 555 feet (see Figure 1.3). It consists of three sections:

- Explosive Linear Charge (1)
- Fuze (2)
- Arresting Cable (3).

Legend:

(1) Explosive Linear Charge
(2) M1134 Fuze
(3) Arresting Cable

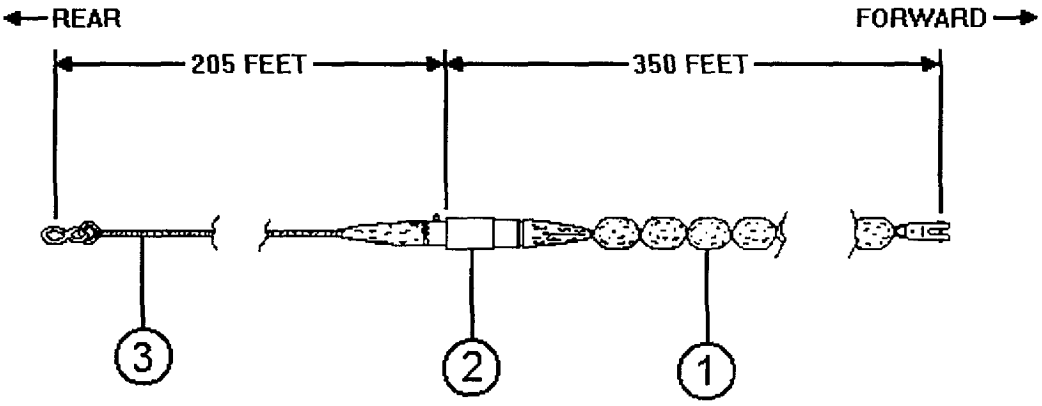

Figure 1.3. Linear Demolition Charge, Deployed

a. Explosive Linear Charge Section (see Figure 1.4). Consists of a 350 foot length of 3/4-inch nylon rope (1) with two (M58A4) or three (M58A3) strands of detonating cord (2) running along side, to which blocks of Composition (C-4) (3) are attached.

Legend:

(1) Nylon Rope
(2) Detonating Cord
(3) Composition 4 (C4)

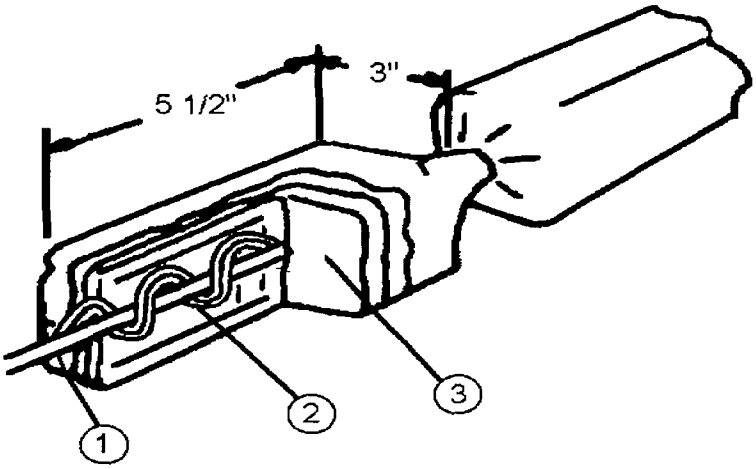

Figure 1.4. Assembly of Explosive Linear Charge Section

(1) The explosive linear charge section is assembled in three 100 foot sections and one 50 foot section. The sections are connected by stop links (1) (see Figure 1.5). At each stop link the ends of the detonating cord (2) are crimped into relay cups (3) to prevent moisture contamination and to ensure continuous propagation. Exposing the relay cups to fire can cause detonation.

Legend:

(1) Stop Link
(2) Detonating Cord
(3) Relay Cup

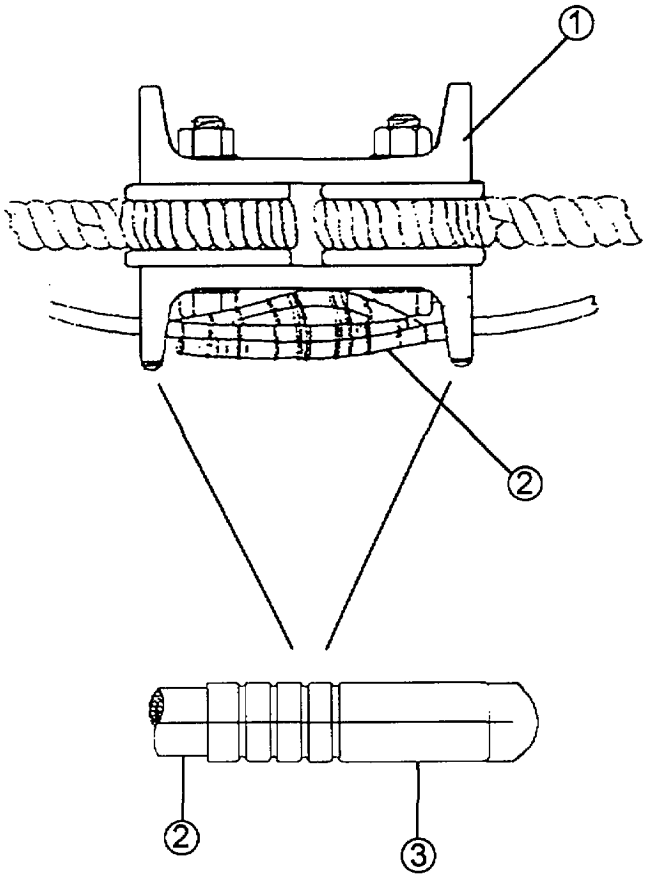

Figure 1.5. Stop Link

(2) At the forward end of the explosive linear charge section is the rocket harness connector (1) (see Figure 1.6). This connector attaches the linear demolition charge to the rocket motor so the rocket motor can pull the charge from the container.

(3) At the rear end of the explosive linear charge section is the linear demolition charge fuze connector (2). The fuze connector contains the ends of the detonating cord. When the fuze connector is assembled to the fuze the detonating cord will line up with the fuze detonators.

Legend:

(1) Rocket Harness Connector
(2) Fuze Connector

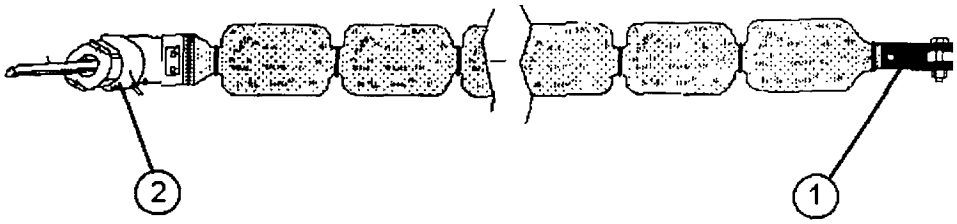

Figure 1.6. Explosive Linear Charge Section

b. M1134 Series Fuze (1)(see Figure 1.7) is cylindrically shaped and contains mating receptacles (2) on one end and a shaft alignment hole (3) at the opposite end and safe/arm window (4). The fuze is mechanically armed when the arming wire is pulled taut during deployment of the linear demolition charge and electrically initiated by current generated from a M34 Blasting Machine.

c. Arresting Cable Section. A 205 foot length of 3/4-inch, 3-strand, nylon rope with an electrical wire running through the center of each strand of rope. The arresting cable provides an electrical path for initiation of the fuze.

Legend:

(1) M1134 Series Fuze
(2) Mating Receptacles
(3) Shaft Alignment Hole
(4) Safe/Arm Window

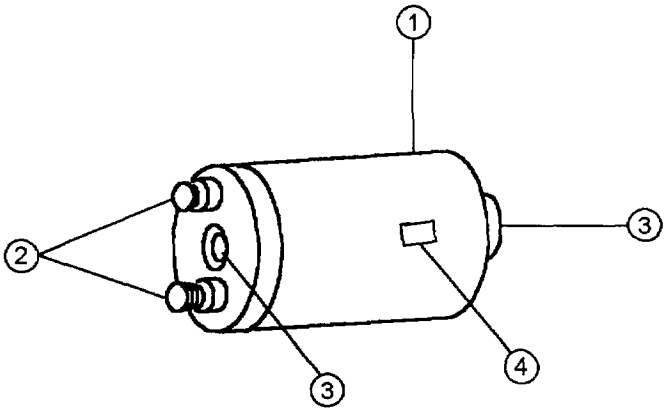

Figure 1.7. M1134 Series Fuze

(1) At the rear end of the arresting cable (see Figure 1.8) is the arresting cable snap hook (1) which anchors the arresting cable to the linear demolition charge container. Also at the rear of the arresting cable is a shorting loop (2). The shorting loop prevents electrical current from reaching the fuze when the linear demolition charge is packed in the container. During deployment the shorting loop is broken, allowing current to reach the fuze.

(2) At the forward end of the arresting cable is the arresting cable fuze connector (3) and the nylon sock (4). The nylon sock protects the ends of the electrical wires (5), which run through the arresting cable, and the fuze arming wire (6).

Legend:

(1) Snap Hook
(2) Shorting Loop
(3) Fuze Connector, Rear Half
(4) Nylon Sock
(5) Electrical Wires
(6) Fuze Arming Wire

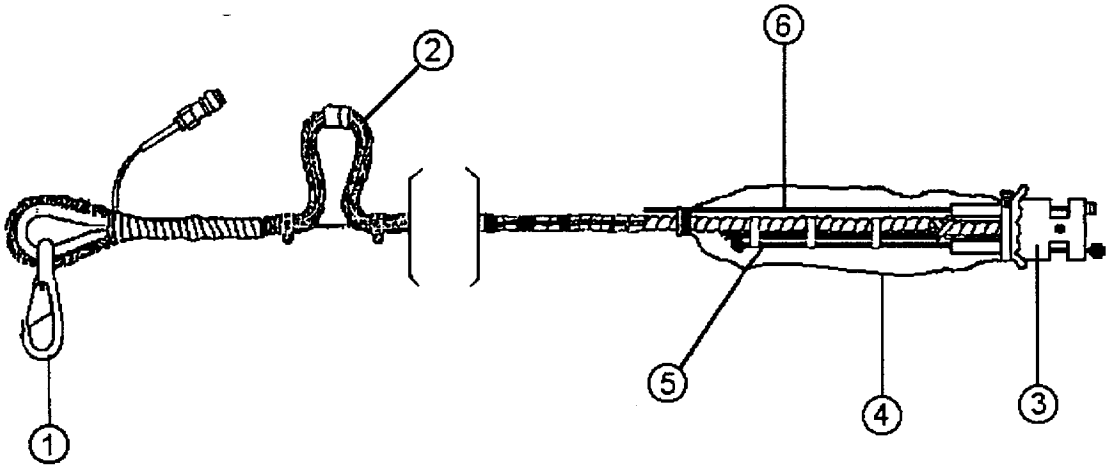

Figure 1.8. Arresting Cable Section

1.9.1.3 M68A2 Inert Linear Demolition Charge. The inert linear demolition charge is an exact replica, i.e., same size, shape and weight, of the M58A3/A4 charge except that the explosive linear demolition charge section is composed of rubber blocks instead of C4 blocks and a M1147 Inert Fuze is used in place of the M1134 Fuze. The inert linear demolition charge is deployed with the MK 22 MOD 3/4 Rocket Motor. The inert linear demolition charge can be repackaged and reused (redeployed) up to three times.

1.9.2 ROCKET MOTORS.

1.9.2.1 MK 22 MOD 3 Rocket Motor. The MK 22 MOD 3 Rocket Motor was specifically designed to tow the linear demolition charge from the container across the breaching point (see Figure 1.9). The MOD 3 Rocket Motor has a single nozzle (1) located at the rear end of the rocket motor. Also at the rear end of the rocket motor is the rocket motor electrical lead (2). Two button lug bands (3) located on the rocket motor tube are used to attach the rocket motor to the MK 155 Launcher. At the forward end of the MK 22 MOD 3 Rocket Motor is the thrust neutralization plug (4). The thrust neutralization plug will blow out from the rocket motor if not secured with a retainer screw thus resulting in the rocket burning on the launch rail after ignition. The retainer screw (5) comes packaged in the rocket motor shipping container and is not attached to the rocket motor. The MOD 3 Rocket Motor has a cable assembly (6). The cable assembly runs along the length of the rocket motor starting at the forward-end.

Legend:

(1) Nozzle
(2) Electrical Lead
(3) Button Lug Band
(4) Thrust Neutralization Plug
(5) Retainer Screw
(6) Cable Assembly

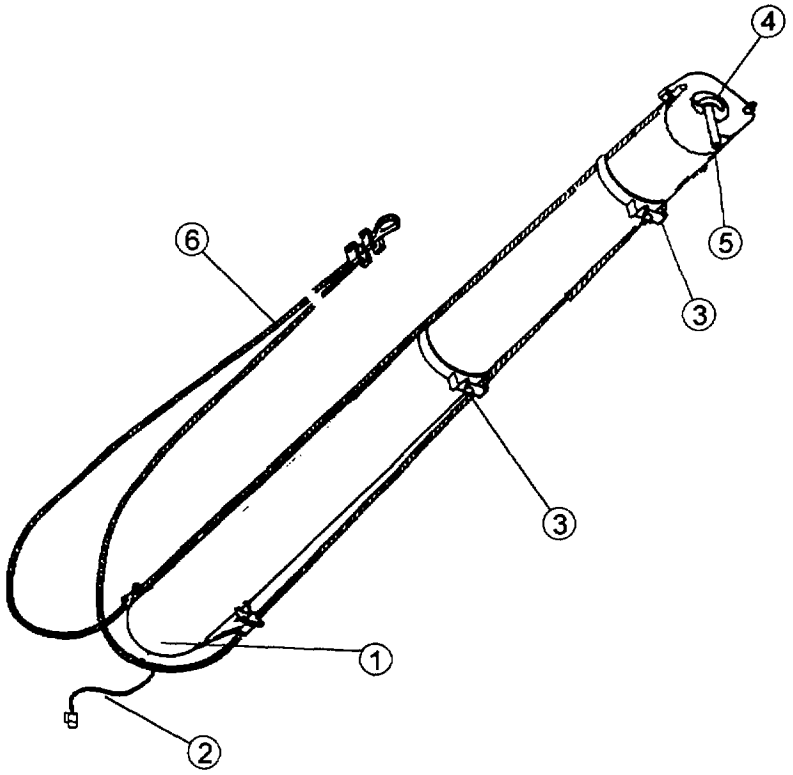

Figure 1.9. MK 22 MOD 3 Rocket Motor

1.9.2.2 MK 22 MOD 4 Rocket Motor. The MK 22 MOD 4 Rocket Motor was specifically designed to tow the linear demolition charge from the container across the breaching point minefield (see Figure. 1.10). The MOD 4 Rocket Motor has forward mounted nozzles (1). Also at the forward end of the MOD 4 Rocket Motor is the thrust neutralization plug (2) and quick release pin (3). The thrust neutralization plug will blow out from the rocket motor if not secured with the quick release pin thus resulting in the rocket burning on the launch rail after ignition. The button lug bands (4) located on the rocket motor tube are used to attach the rocket motor to the MK 155 Launcher. At the rear end of the MK 22 MOD 4 Rocket Motor are the rocket motor electrical lead (5), and the rocket bridle cable (6). The electrical lead connects to the linear demolition charge junction box. The rocket bridle cable connects to the linear demolition charge rocket harness connector.

Legend:

(1) Nozzles
(2) Thrust Plug
(3) Quick Release Pin
(4) Button Lug Bands
(5) Electrical Lead, Rocket Motor
(6) Bridle Cable

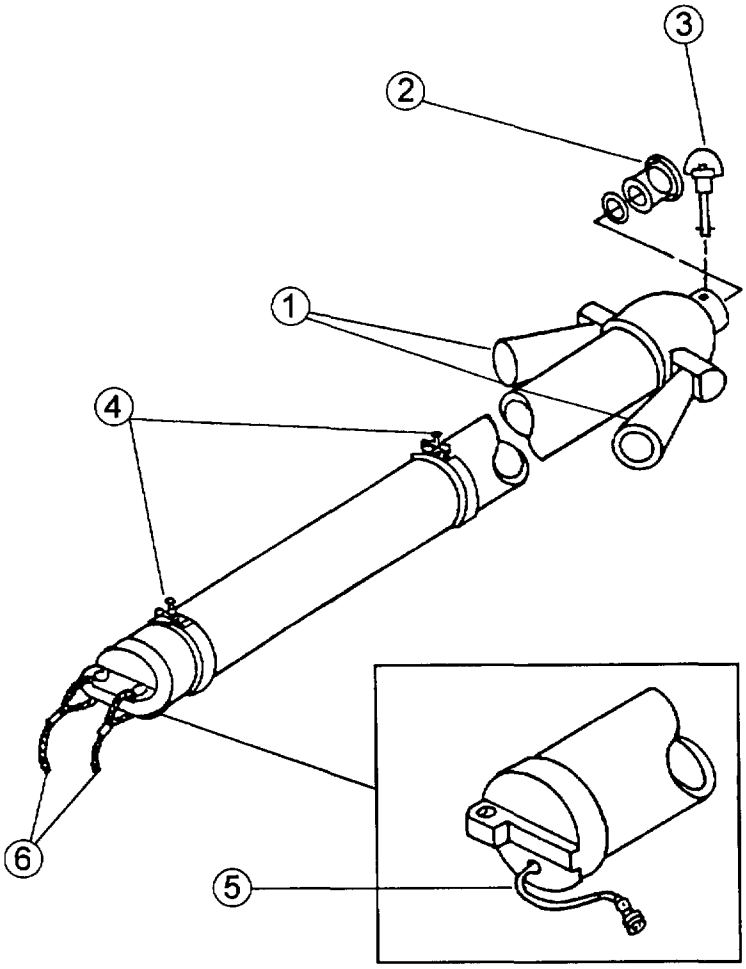

Figure 1.10. MK 22 MOD 4 Rocket Motor

1.9.3 MK 155 LAUNCHER MODS 0/1/2/3. The MK 155 launcher (see Figure 1.11) is a welded framework used to hold the linear demolition charge container in place and provide a platform for a hydraulically driven launch arm to launch a rocket motor. There are four models of the MK 155 launcher: MOD 0/1/2/3. All models of the MK 155 launcher have the following components:

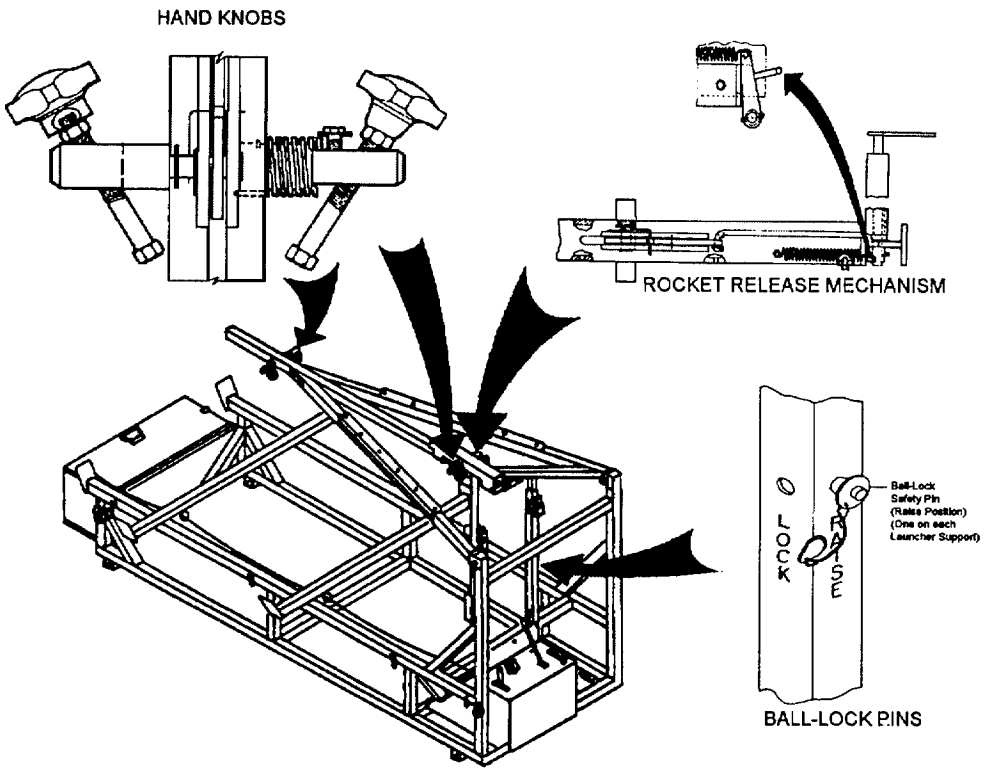

Figure 1.11. MK 155 MOD 0/1/2/3 Mine Clearance Launcher

a. Rail. Rail groove receives rocket motor button lugs. Contains the following assemblies:

- Hand Knobs (see Figure 1.11). Secure rocket motor on rail, prevent side to side movement and reduce swaying during transport.

- Cable Sheaths. Keep rocket bridle cables from becoming entangled on charge container, trailer or launcher during transport and deployment. Always use sheaths when rocket is loaded.

- Rocket Release Mechanism (see Figure 1.11). Secures rocket in place during transport. Prevents back and forth movement.

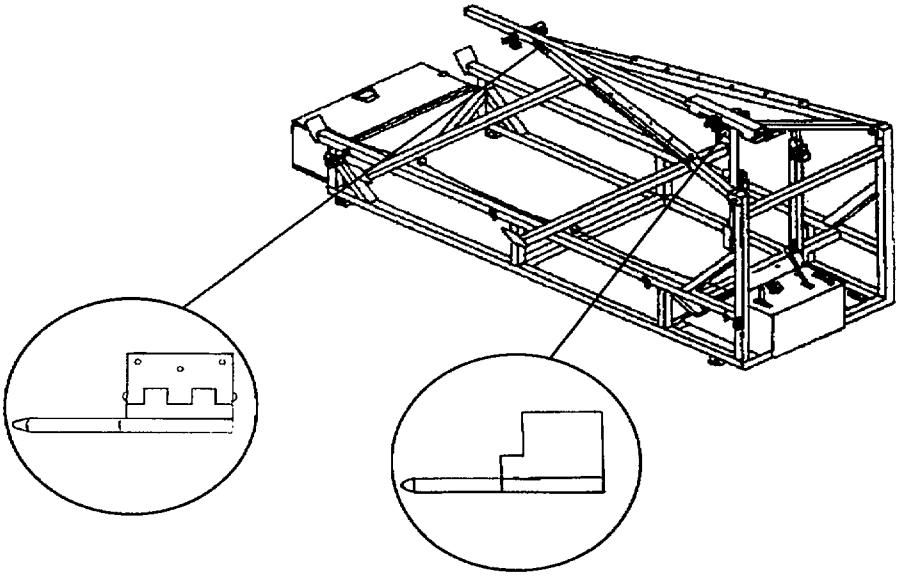

Figure 1.12. Alignment Pins.

- Alignment Pins (see Figure 1.12). Front and rear pins position rocket motor button lug assemblies and support the weight of rocket motor.

- Clinometer (see Figure 1.13). Indicates angle in degrees that launcher rail is raised.

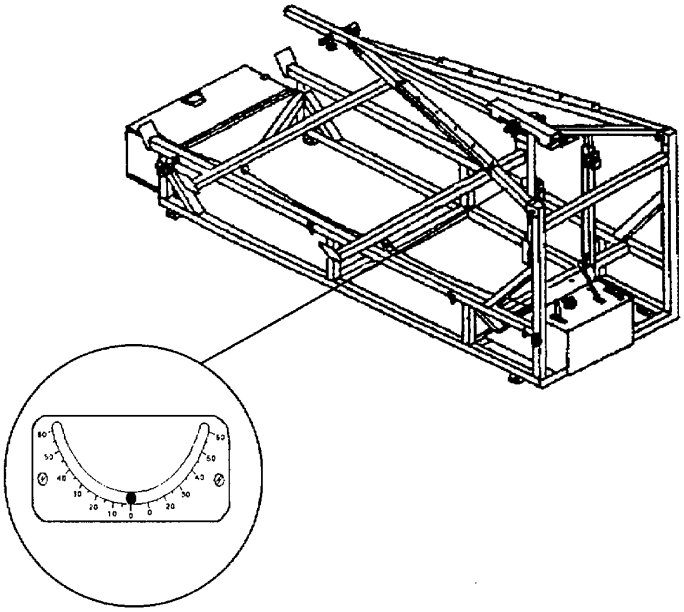

Figure 1.13. Clinometer.

b. Main Frame Weldment. Bolts directly to trailer frame.

c. Telescoping Tube Assemblies (see Figure 1.14). Inner and outer tubes telescope to allow launcher rail to raise and lower. Contains the following assemblies:

- Ball-Lock Pins. Restrict upper and lower limits that tubes can telescope.

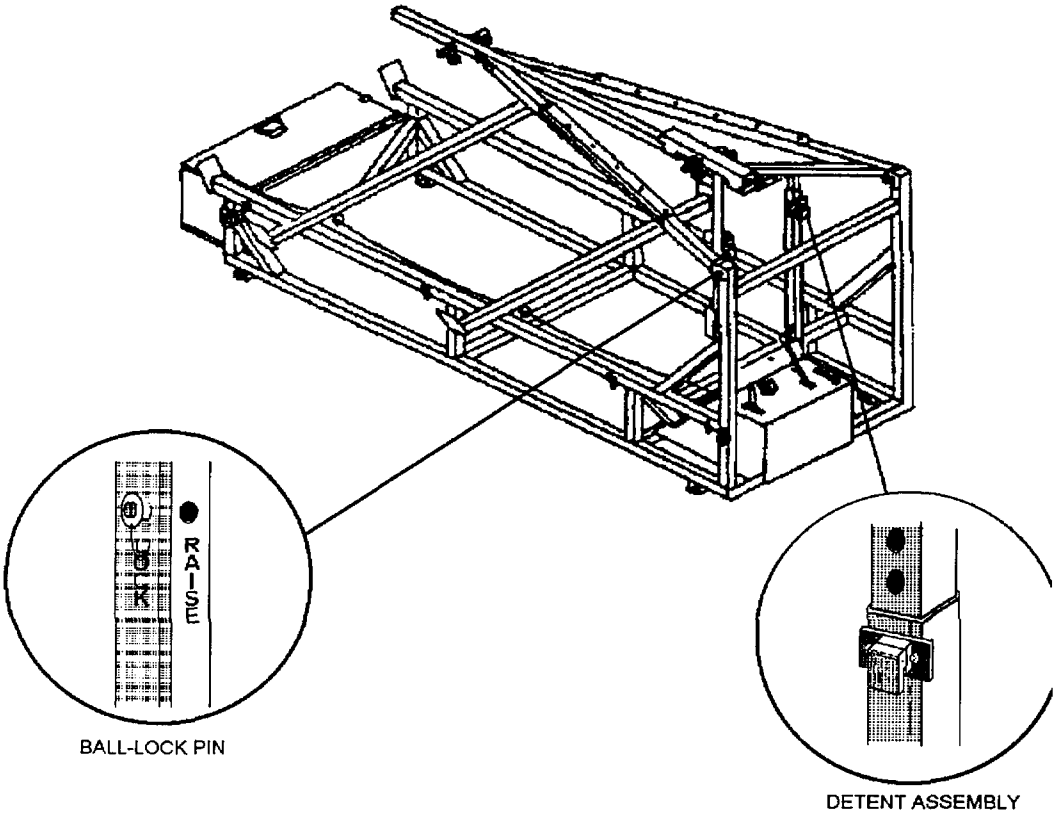

Figure 1.14. Ball-Lock Safety Pins

- Detent Assemblies. Control movement of tubes.

- Safety Switch. On left outer tube prevents accidental firing of rocket motor or linear demolition charge.

d. Storage Container. Mounted on front (towing end) of launcher. Secures components needed to operate MICLIC. See Appendix H for a list of components.

e. Mod 2/3 Storage Container. Mounted on rear of launcher. Secures components needed to operate MICLIC. See Appendix H for a list of components.

1.9.3.1 Electrical System. Provides electrical power from the towing vehicle, the M34 Blasting Machine, and the M51 Blasting Cap Test Set for rocket motor ignition, linear demolition charge detonation, and/or trailer remote quick disconnect. The electrical system for the MOD 0/1 differs from the MOD 2/3 in control boxes, cabling, and the addition of an electrically operated solenoid valve on the MOD 2/3. Components of the electrical system are:

a. Safety Switch Assembly. The safety switch assembly, which is mounted on left launcher rail support leg, prevents the rocket and linear charge from firing until the rocket launcher rail is elevated to the 45-47° firing position. The safety switch connector attaches to Receptacle No. 1, on the charge container.

b. Selector Switch Box (MOD 0/1) (see Figure 1.15). Directs electrical power flow for rocket motor Initiation or linear demolition charge detonation from the M34 Blasting Machine. Cable Assembly No. 2 is permanently connected to the selector switch box. Cable Assembly No. 2 connects to the M34 Blasting Machine.

Legend:

(1) Selector Switch Box
(2) Cable Assembly No. 3
(3) Cable Assembly No. 2

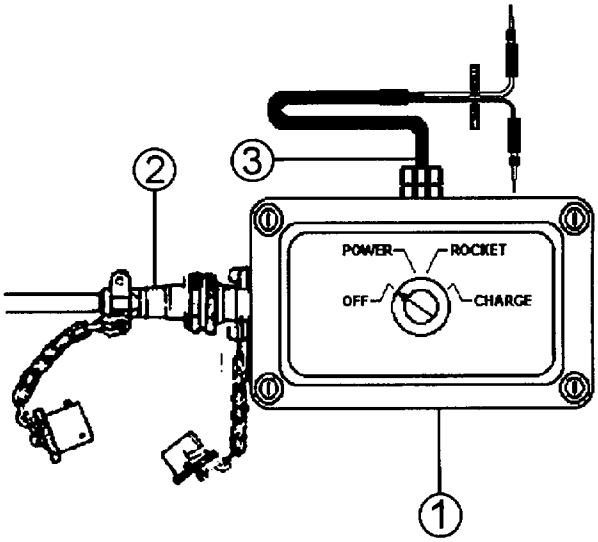

Figure 1.15. Selector Switch Box and Cable Assemblies for MK 155 MOD 0 and MOD 1

c. Selector Switch Assembly (MOD 2/3) (see Figure 1.18). Directs electrical power flow for rocket motor initiation or linear charge detonation from the M34 Blasting Machine. It also directs external vehicle electrical power to operate the launcher rail and to remotely release the trailer disconnect.

d. Solenoid Valve (MOD 2/3) (see Figure 1.20). The solenoid valve provides an alternate way to connect the hydraulic fluid in the accumulator to the actuating cylinder by bypassing the hydraulic control valve electrically. The solenoid valve is used to remotely raise the launcher rail using the selector switch assembly.

Legend:

(1) M34 Blasting Machine Housing
(2) Handle
(3) Test Lamp
(4) Male Shorting Plug
(5) Female Shorting Plug

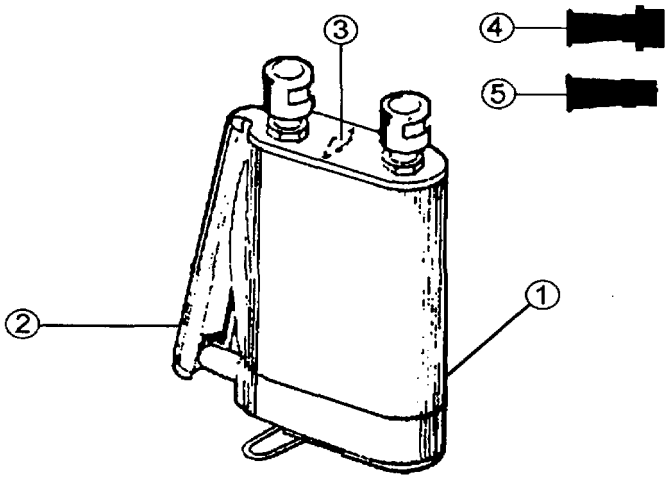

Figure 1.16. M34 Blasting Machine

e. M34 Blasting Machine (see Figure 1.16). Provides 340 volts of electrical power to launch the rocket motor and/or detonate the linear demolition charge.

Legend:

(1) Handle
(2) Terminals
(3) Test Lamp

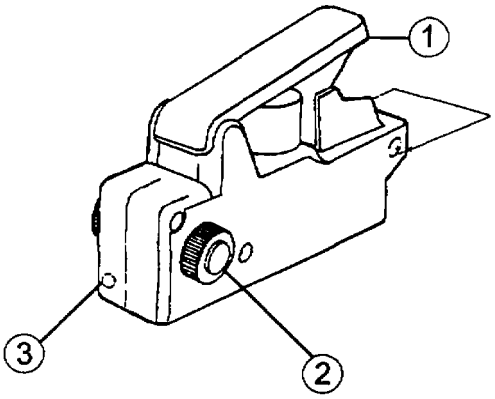

Figure 1.17. M51 Blasting Cap Test Set

f. M51 Blasting Cap Test Set (see Figure 1.17). Provides very low levels of electrical current to test the continuity of the MICLIC's electrical circuits. If the circuit is continuous and has less than 200 ohms resistance, the current can flow through the electrical circuit and actuate the switching circuit, which lights the indicator lamp.

Legend:

(1) Power Cable, W6
(2) Selector Switch Assembly
(3) NATO Connector
(4) Cable, W3
(5) Cable, W5

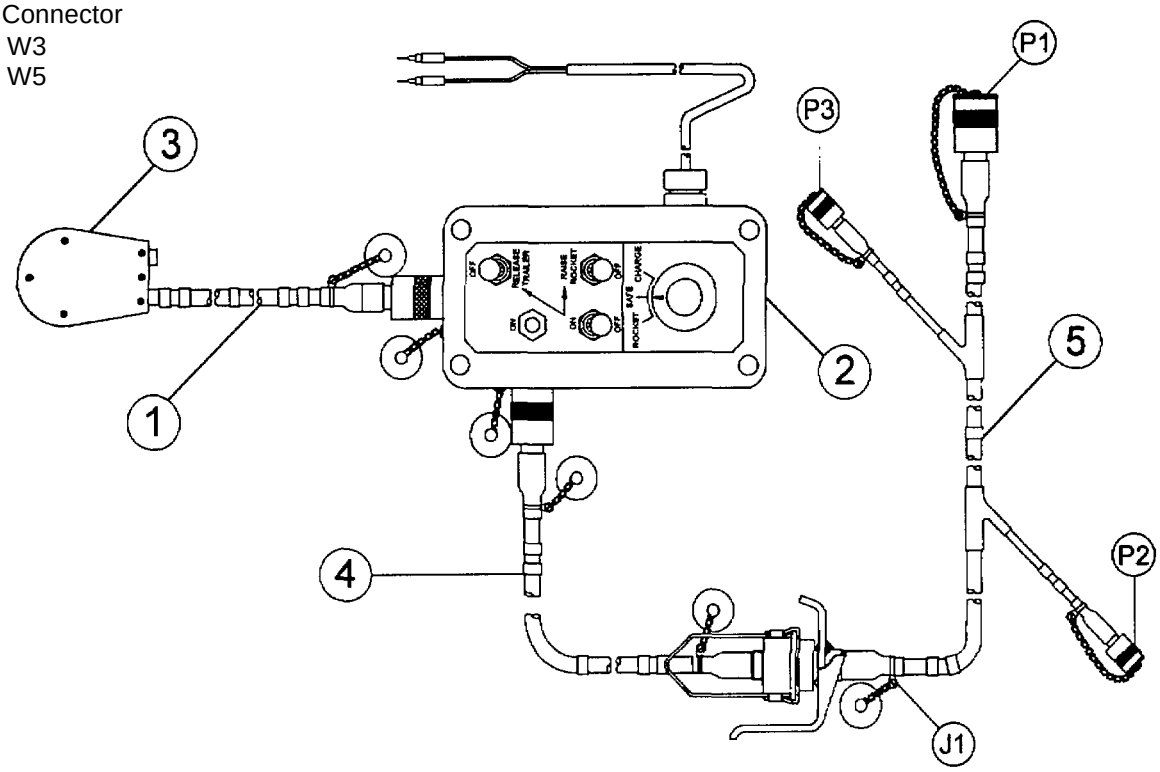

Figure 1.18. Selector Switch Assembly, Receptacle and Cables for MOD 2 and MOD 3

g. Electrical Cables Assembly (MOD 0/1) (see Figure 1.23). The cable assembly provides electrical power to units necessary to operate the MOD 0/1 MK 155 Launchers. Cable assembly No. 3 is a 75 foot cable through which the selector switch box directs electrical power to the safety switch assembly on the left launcher telescoping support assembly.

h. Electrical Cable Assemblies (MOD 2/3) (see Figure 1.24). The vehicle slave-start receptacle on the tow vehicle is used to remote-start the vehicle and to provide vehicle power to the MICLIC system with remote trailer disconnect (MOD 2/3 only). When vehicle power is used, the W6 power cable is connected from vehicle slave-start receptacle to an input connector on the selector switch assembly. The 60-foot W3 special purpose cable is connected from the output receptacle of the selector switch assembly to the W5 multi-purpose cable which is attached to a cable bracket mounted on the trailer disconnect device. The W5 multi-purpose cable is connected to the W3 cable, the trailer disconnect device, the remote raise solenoid valve receptacle mounted on the hydraulic base plate, and the safety switch assembly.

i. Remote Trailer Disconnect Device (1) (MOD 2/3) (see Figure 1.19). An electrically-powered (vehicle powered) mechanism mounted on the trailer lunette which provides a remote method of quickly disconnecting the trailer from the towing vehicle. MOD 0/1 launchers not modified IAW MWO 9-1375-215-30-1 will not have the remote trailer disconnect device and associated hardware. MOD 2/3 launchers/trailers modified IAW MWO 9-1375-215-30-1 have the remote trailer disconnect device. The W5 multipurpose electrical cable (2) supplies power to the device.

Legend:

(1) W3P1 Connector
(2) W5J1 Connector
(3) Disconnect Device

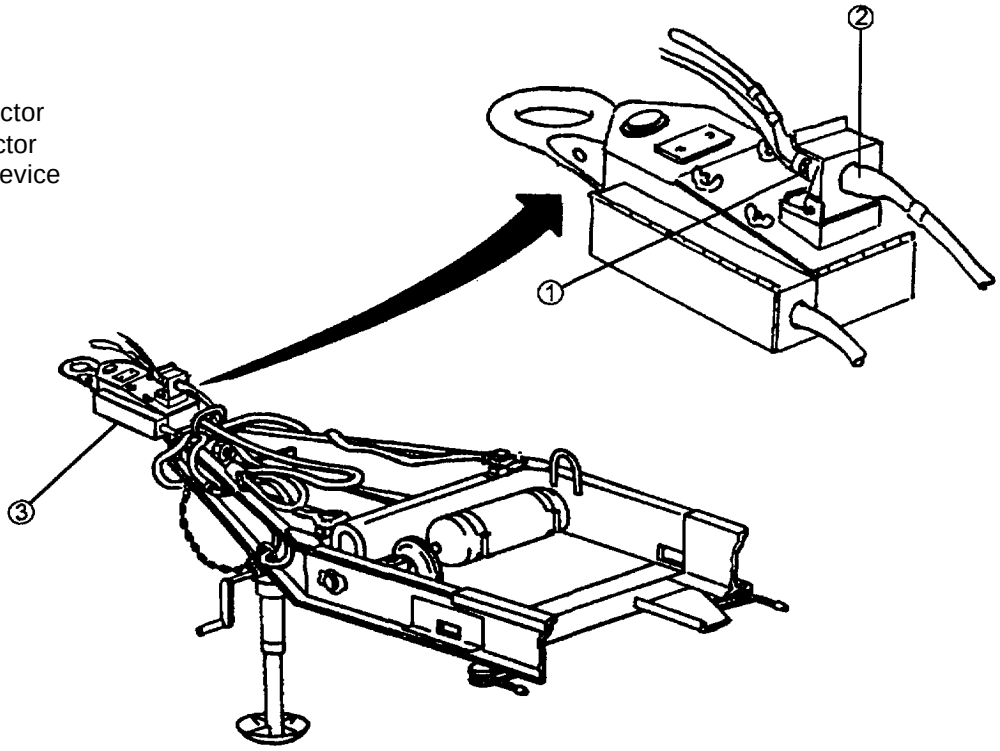

Figure 1.19. Remote Trailer Disconnect Device for MOD 213

1.9.3.2 Hydraulic System. Located at the rear of the launcher (see Figure 1.26), is used to raise or lower the launch rail and to pressurize the accumulate for remote raising of the launch rail. The hydraulic system control panel (see Figure 1.20) the subsystems shown below.

a. Hydraulic Hand Pump (1). Pumps hydraulic fluid to extend the hydraulic actuating cylinder or to pressurize the accumulator. The hand pump has a two position valve (2). The HOLD position allows the hand pump to build up and hold pressure in the system. The RELEASE position releases hydraulic pressure from the system, when the hydraulic control valve is in the manual raise/lower position. If the hand pump is operated with the pump valve in the RELEASE position, the fluid is bypassed internally and no hydraulic pressure is applied to the system.

Legend:

(1) Hydraulic Hand Pump
(2) Hydraulic Control Valve
(3) Accumulator
(4) Hydraulic Actuating Cylinder
(5) Hydraulic Pressure Gage
(6) Solenoid Valve

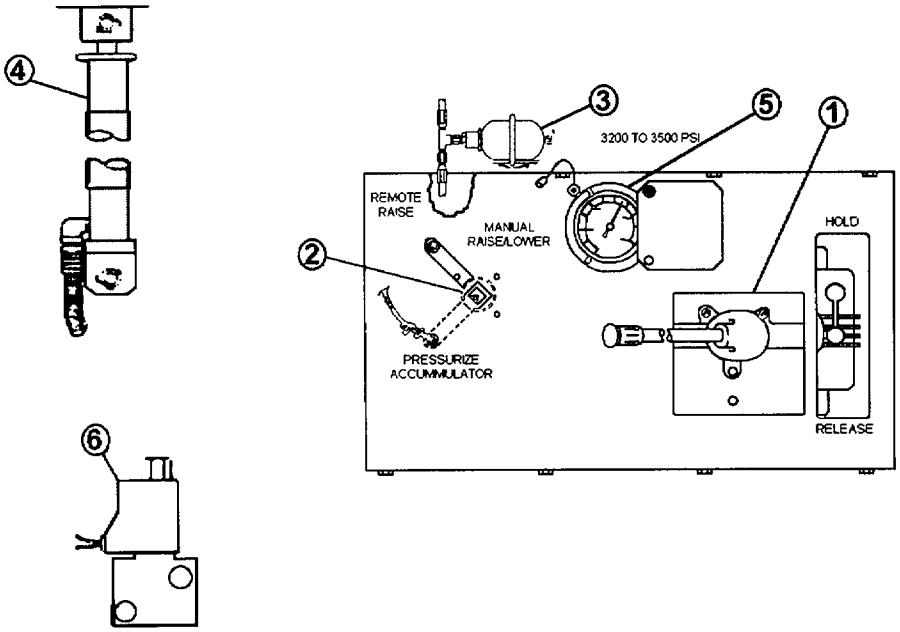

Figure 1.20. Hydraulic System Control Panel

b. Hydraulic Control Valve (2). Has three positions:

(1) MANUAL RAISE/LOWER POSITION. If the pump valve is operated with the pump valve in the HOLD position, hydraulic pressure is applied to extend the hydraulic actuating cylinder and raise the launch rail. If the pump valve is moved to the RELEASE position, then hydraulic fluid from the actuating cylinder returns to the hand pump reservoir which allows the launch rail to lower.

(2) PRESSURIZE ACCUMULATOR POSITION. If the hydraulic hand pump is operated with the hand pump lever in the HOLD position, hydraulic pressure is applied to charge the accumulator. This pressure is indicated on the hydraulic pressure gage. If the pump valve is moved to the RELEASE position, the hydraulic pressure in the accumulator is not released.

(3) REMOTE RAISE POSITION. The hydraulic control valve can be moved from the PRESSURIZE ACCUMULATOR position to the REMOTE RAISE position by pulling the lanyard from inside the host vehicle or by hand at the valve. When this is done, hydraulic fluid under pressure in the accumulator is connected through the hydraulic control valve to the actuating cylinder. Hydraulic pressure from the accumulator extends the actuating cylinder, which raises the launch rail.

c. Accumulator (3). Stores hydraulic fluid under pressure. This pressure is used to extend the hydraulic actuating cylinder and raise the launch rail when the hydraulic control valve is moved to the REMOTE RAISE position.

d. Hydraulic Actuating Cylinder (4). Raises the launch rail. It is connected to the hydraulic control valve by a flexible hose. When the hydraulic control valve is positioned to apply hydraulic pressure to the actuating cylinder, the cylinder extends to raise the launch rail. When hydraulic pressure to the actuating cylinder is released, the weight of the launch rail compresses the actuating cylinder as it returns to the down position.

e. Hydraulic Pressure Gage (5). Indicates the hydraulic pressure being applied to the accumulator gage and the hydraulic pressure stored in the accumulator after it has been charged. The face of some pressure gages have a green arc indicating the recommended pressure range between 3,200-3,500 psi. The indicator pointer must be within this pressure range before the accumulator can be assumed to be fully charged.

f. Solenoid Valve (MOD 2/3 Launchers) (6). Provides an alternate way to connect the hydraulic fluid in the accumulator to the actuating cylinder by bypassing the hydraulic control valve. The solenoid valve is used to remotely raise the launcher rail using the selector switch assembly. Electrical power to operate the solenoid valve is supplied by the towing vehicle through the W6 power cable to the selector switch assembly. Electrical power is then distributed through the W3 special purpose cable to the W5 multi-purpose cable to the solenoid valve connector.

1.9.4 TRAILER CHASSIS. The MICLIC uses two trailer chassis, the M200 and the M353. The trailer holds the launcher and line charge container in place during loading, transport and firing at the targeted minefield.

a. M200A1 Trailer. The M200A1 trailer is a modified 2-1/2 ton trailer with dual wheels (side by side) on each side of the trailer. TB 9-2330-323-30 specifically modifies the M200A1 trailer to accept the MICLIC system. The M200A1 trailer has air-over-hydraulic brakes and a mechanical hand brake. It also has a narrower inside dimension than the M353 trailer and can only carry MK 155 MOD 1/3 launchers which are narrower than the MOD 0/2.

b. M200A1 Trailer. Some of the Army's M200A1 trailers have been further modified with tracked undercarriage kits which replace the dual wheels (see Figure 1.21). The kits feature a steel reinforced rubber track which can be installed by support maintenance units in the field in 3 hours. The track lowers the surface ground pressure from 28.5 psi to 6.2 psi.

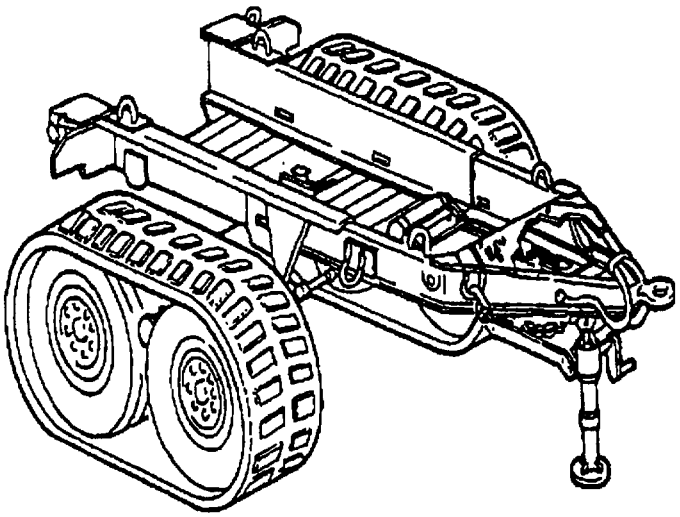

Figure 1.21. M200A1 Tracked Trailer

c. M353 Trailer. Is a general purpose, 3-1/2 ton capacity, two wheel trailer. The M353 trailer has air-over-hydraulic brakes and a mechanical hand brake. All four of the modifications, MOD 0/1/2/3 of the MK 155 launcher, can be installed on the M353 trailer; however, a modification kit must be used with the MOD 1/3 launchers to adapt them to the M353 trailer.

1.10 DIFFERENCES BETWEEN LAUNCHER MODELS. There are four models of the MK 155 launcher (see Figure 1.22).

a. MOD 0 -Designed for the M353 trailer.

b. MOD 1 -Designed to fit the M200A1 tracked or wheeled trailer. The M200A1 is six inches narrower than the M353 trailer.

c. MOD 2 -When the MOD 0 launcher is modified by applying MWO 9-1375-215-30-1, Installation of Electromechanical Trailer Release Assembly, the launcher becomes a MOD 2.

d. MOD 3 -When the MOD 1 launcher is modified by applying MWO 9-1375-275-30-1, the launcher becomes MOD 3.

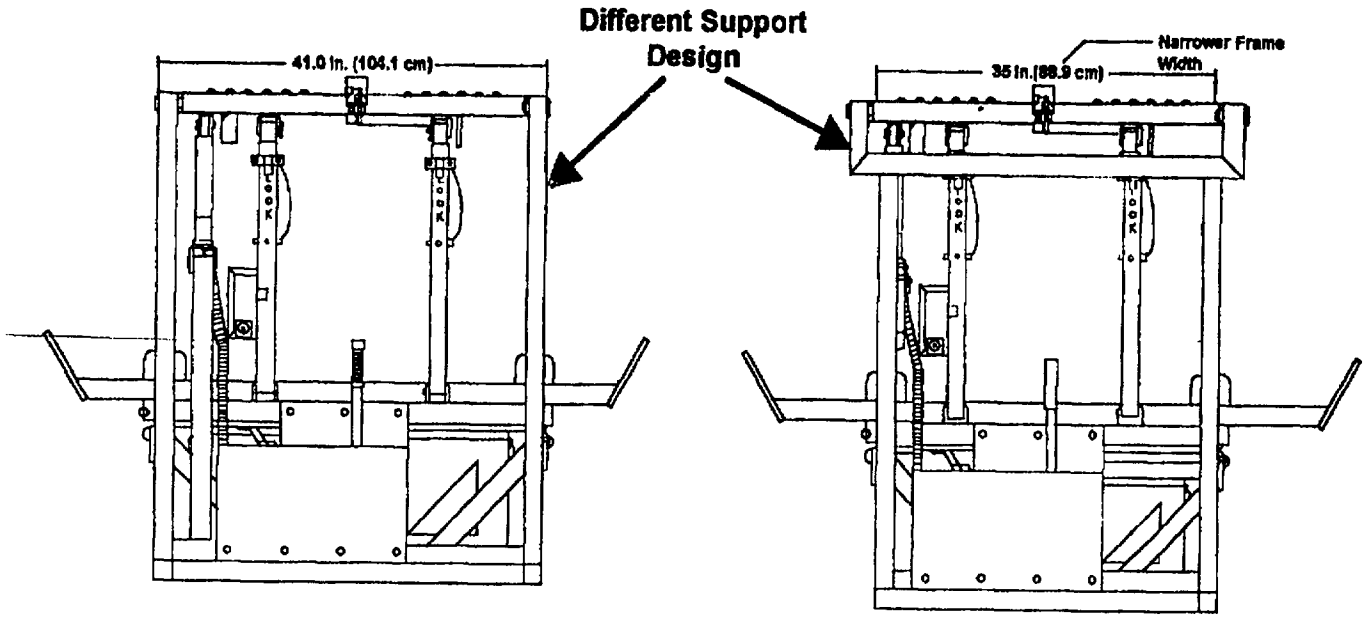

MOD 0 Launcher

MOD 1 Launcher

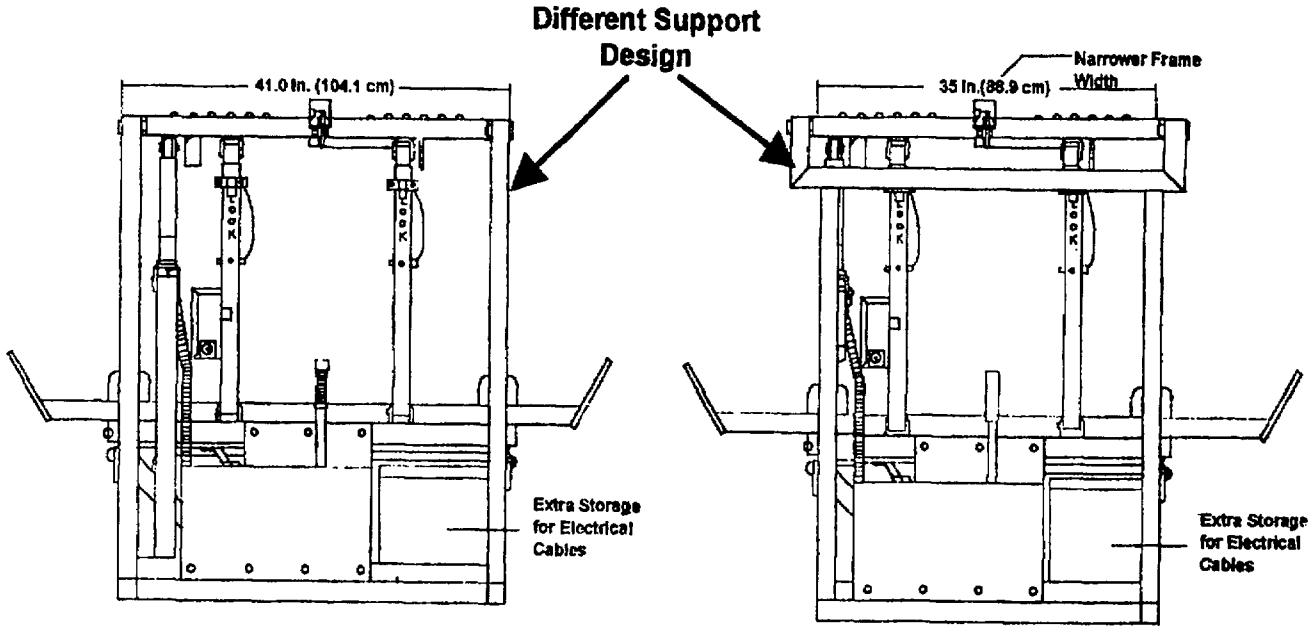

MOD 2 Launcher

MOD 3 Launcher

Figure 1.22. Differences Between Launcher Models

e. MOD 0/2 Launcher is normally mounted on the M353 trailer, but if the M353 trailer is not available, Appendix G of TM 9-2330-389-14&P, Tracked Trailer, Cargo, M200A1, tells how to manufacture brackets to mount the MOD 0/2 on the M200A1 Trailer.

f. MOD 1/3 Launcher can be mounted on the M353 M200A1 Trailer. Two shackles are provided for mounting the MOD 1/3 onto the M200A1 Trailer. Store support equipment in the launcher's storage container.

1.11 EQUIPMENT DATA.

Table 1.1. Detailed Data for MICLIC Sub-Systems

a. Launcher.

	MOD 0		MOD 1	
Height	49.0 in.	(124.5 cm)	49.0 in.	(124.5 cm)
	launcher rail at 0 degrees		launcher rail at 0 degrees	
Width	64.5 in.	(163.8 cm)	58.5 in.	(148.6 cm)
Length	112.0 in.	(284.5 cm)	112.0 in.	(284.5 cm)
Weight	940 lb	(426.0 kg)	880 lb	(440 kg)

b. Launcher.

	MOD 2		MOD 3	
Height	49.0 in.	(124.4 cm)	49.0 in.	(124.5 cm)
	launcher rail at 0 degrees		launcher rail at 0 degrees	
Width	64.5 in.	(163.8 cm)	58.5 in.	(148.6 cm)
Length	120.0 in.	(284.5 cm)	120.0 in.	(284.5 cm)
Weight	1015 lb	(461.4 kg)	955 lb	(434.1 kg)

c. **Launcher Hydraulic Assembly.**

Pump:

Height	6.5 in. (16.5)
Width	
without handle	6 in. (15.2 cm)
with handle	26.95 in. (68.5 cm)
Weight	30 lb
Max working pressure	5000 psi (34,475 kPa)
Total piston stroke	1.5 in (3.8cm)
Relief valve setting	5300 psi (36,543.5 kPa)
Reservoir capacity	(2.5) qt (2.4 L)

Solenoid Valve:

Minimum Voltage	21.6 VDC
Maximum Voltage	26.4 VDC

Table 1.1. Detailed Data for MICLIC Sub-Systems (Cont)

Accumulator:	
Type	3,200 psi (20,685 kPa)(standard bladder)
Diameter	3.46 in. (8.8 cm)
Oil capacity	1 pt (0.47 L)
Bladder material	BUNA-N Rubber
Max pressure	5000 psi (34,475 kPa)
Gage:	
Graduation interval	50 psi (344.8 kPa)
Accuracy	1.5%
Maximum reading	5000 psi (34,475 kPa)
Cylinder:	
Bore diameter	1.25 in. (3.2 cm)
Oil capacity	7.2 cu in. (118 cc)
Working pressure	3,200 psi (20,685 kPa)

d. **Trailer.**

	M353	**M200A1** WHEELED	**M200A1** TRACKED
Height	48.0 in. (121.9 cm)	42.0 in. (107.0 cm)	43.5 in. (110.2 cm)
Width	96.0 (243.8 cm)	93.0 in. (236.0)	96.0 in. (243.8 cm)
Length	186.5 in. (473.7 cm)	161.9 in. (412.0 cm)	165.5 in. (419.3 cm)
Weight:			
Chassis	2780 lb (1261 kg)	2410 lb (1096 kg)	3450 lb (1564 kg)
Max (payload)	7000 lb (3178 kg)	7000 lb (3178 kg)	8450 lb (3833 kg)
Towing Speed:			
Cross-country	25 mph (40.2 kph)(or less, depending on terrain)	30 mph (48 kph)	15 mph (24 kph)
Highway	50 mph (80.5 kph)	55 mph (88 kph)	50 mph (80 kph)
Brakes:			
Hand	Mechanical	Mechanical	Mechanical
Service	Air-over-hydraulic	Air-over-hydraulic	Air-over-hydraulic

Table 1.1. Detailed Data for MICLIC Sub-Systems (Cont)

e. **Linear Demolition Charge Container:**

Height	24.0 in. (61.0 cm)
Width	53.75 in. (137 cm)
Length	83.25 in. (211 cm)
Weight:	
Loaded container	2850 lb (1295 kg)
Unloaded container	384 lb (174 kg)
Hard cover	145 lb (66 kg)

f. **Linear Demolition Charge.**

Length	350 ft (106.8 m)
Number of pellets	1400
Weight (explosive)	1750 lb (794.0 kg)
Weight per pellet	1.25 lb (0.6 kg)
Explosive	Composition C4
Detonation cord	PETN
Fuze (M 1134 Series)	Leads
Diameter	(3.5 in.) (8-9 cm)
Length	6.5 in. (16.5 cm)
Arresting cable	205 ft. (63 m)

g. **Rocket Motor.**

	Old Box MK 697 MOD O	New Box MK 757 MOD O
Height	21.25 in. (53 cm)	16.0 in. (40.6 cm)
Width	14 in. (36 cm)	14.0 in. (35.6 cm)
Length	92.5 in. (235 cm)	88.63 in. (225 cm)
Weight	262.50 lb (119.3 kg)	238.4 lb (108.1 kg.)
Storage temp limits	-60°F to + 160°F	-60°F to + 160° OF
Cube	15.9 cu ft	11.4 cu ft
Unpacked:		
Length	76.81 in. (195.1 cm)	
Diameter	5 in. (12.7 cm)	
Weight	128 lb (58.1 kg)	
Firing temp limits	-40° F to + 125°F	
Weight (explosive)	46 lb (20.9 kg)	

h. **Trailer Disconnect Device.**

Weight	60 pounds (27.2 kg)
Power requirement	24 +/- 2.4 VDC

Section III. PRINCIPLES OF OPERATION

1.12 SYSTEM OVERVIEW. The MICLIC is an electrically Initiated demolition system. The M34 Blasting Machine creates energy necessary to detonate the explosive linear charge. A series of cables and wires connect this energy to the MK 22 Rocket Motor and to the M58 Linear Demolition Charge. Safety features throughout the electrical system prevent the accidental launch of the rocket motor and/or detonation of the linear demolition charge.

1.13 ELECTRICAL SYSTEM.

1.13.1 MOD 0/1 ELECTRICAL SYSTEM. The general layout of electrical components is depicted in Figure 1.23: the M34 Blasting Machine (1) is connected to Cable No. 2, which is connected to Selector Switch Box (2). The Selector Switch Box (2) is connected to Cable No. 3 (3). Cable No. 3 (4) is connected to the Launcher Safety Switch (5). The Safety Switch (5) is connected to the linear demolition charge junction box (6). The rocket motor electrical lead (7) and linear demolition charge electrical lead (8) are also connected to the linear demolition charge junction box (6).

Legend:

(1) M34 Blasting Machine
(2) Selector Switch Box
(3) Cable No. 2
(4) Cable No. 3
(5) Launcher Safety Switch
(6) Linear Charge Junction Box
(7) Rocket Motor Electrical Lead
(8) Linear Charge Electrical Lead

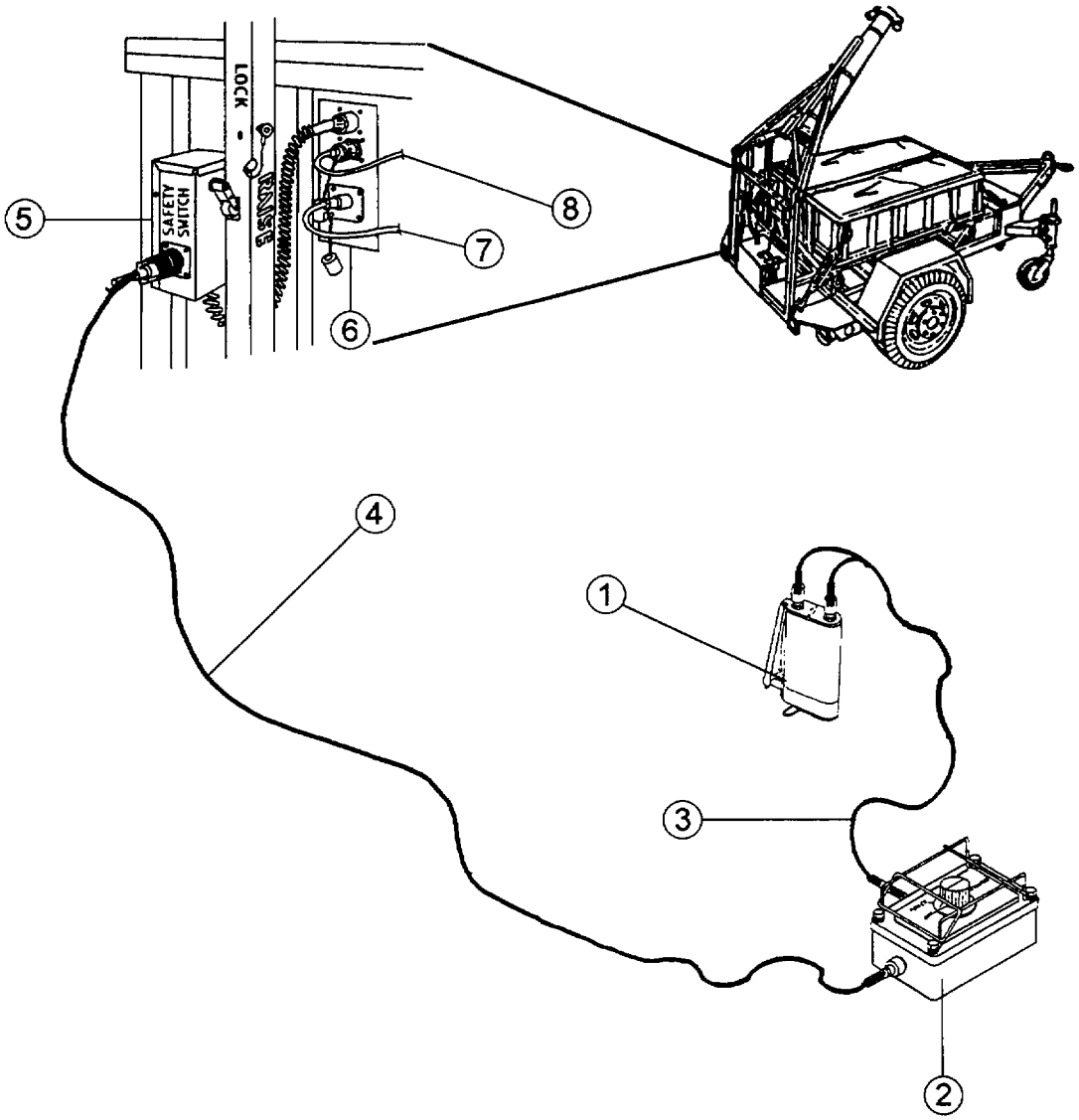

Figure 1.23. MOD 0/1 Electrical System

a. When the Selector Switch Box is in the OFF position, an open circuit is created and electrical current cannot reach the safety switch.

b. When the launch rail is down (0°), the safety switch creates an open circuit and electrical current cannot reach the linear demolition charge junction box

c. To fire the MK22 Rocket Motor, raise the launch rail to firing position (45-47°), the safety switch closes creating an electrical path to the junction box. Turning the control box knob to ROCKET closes the circuit and creates an electrical path to the safety switch. Operate the M34 Blasting Machine. Current will travel from M34, through the cable assembly No. 2, the selector switch box and cable No. 3, through safety switch, through rocket motor electrical lead, to initiate the rocket motor.

d. Upon ignition, the rocket motor leaves the launch rail, tows the linear demolition charge from the container, and positions it over the minefield. When the rocket motor reaches its apex, the forward thrust of the rocket pulls the arresting cable taut, this breaks the shorting loop at the container end of the arresting cable and pulls the arming wire at the fuze end of the arresting cable. When the linear demolition charge comes to rest on the ground, the fuze is armed and a complete circuit exists to the fuze.

e. To detonate the M58 Linear Demolition Charge, with the rail still in the raised position, turn the selector switch knob to CHARGE and operate the M34 Blasting Machine. Current will travel from the M34 Blasting Machine, through the cable assembly No. 2, through the selector switch box, through cable No. 3, through the safety switch, through arresting cable electrical lead, to initiate the fuze.

1.13.2 MOD 2/3 ELECTRICAL SYSTEM. The difference between the MOD 0/1 and the MOD 2/3 is that the selector switch assembly allows vehicle power to be used to raise the launch rail and to operate the remote trailer disconnect device. The M34 Blasting Machine (1)(see Figure 1.24) is connected to a selector switch assembly (2). The selector switch assembly (2) is connected to the W6 cable (3), which plugs into the towing vehicle NATO receptacle (4), and the W3 cable (5). The W3 cable (5) connects through the remote trailer disconnect device to the W5 cable (6). The W5 cable (6) connects to the remote trailer disconnect device (7) on one end and the launcher safety switch (8) and solenoid connector (9) at the opposite end. The safety switch (8) is plugged into the linear demolition charge junction box (10). The rocket motor electrical lead (11) and linear demolition charge electrical lead (12) are also plugged into the linear demolition charge junction box (10).

a. When the selector switch box is in the OFF position an open circuit is created and electrical current cannot reach the safety switch.

b. When the launch rail is down (0°) the safety switch creates an open circuit and electrical current cannot reach the linear demolition charge junction box.

c. To fire MK 22 Rocket Motor, raise launch rail to firing position (45-47°). The safety switch closes creating an electrical path to the junction box. Turning the selector switch knob to ROCKET closes the circuit and creates an electrical path to the safety switch. Operate the M34 Blasting Machine. Current will travel from M34, through the selector switch, W3 cable, W5 cable, safety switch and rocket motor electrical lead to initiate the rocket motor.

d. Upon ignition, the rocket motor leaves the launch rail, tows the linear demolition charge from the container, and positions it over the minefield. When the rocket motor reaches its apex, the forward thrust of the rocket pulls the arresting cable taut, this breaks the shorting loop at the container end of the arresting cable and pulls the arming wire at the fuze end of the arresting cable. When the linear demolition charge comes to rest on the ground, the fuze is armed and a complete circuit exists to the fuze.

e. To detonate the M58 Linear Demolition Charge, with the rail still in the raised position, turn the selector switch knob to CHARGE and operate the M34 Blasting Machine. Current will travel from the M34, through the selector switch, W3 cable, W5 cable, safety switch and through the arresting cable electrical lead, to initiate the fuze.

Legend:

(1) M34 Blasting Machine
(2) Selector Switch Assembly
(3) Cable W6
(4) NATO Receptacle
(5) Cable W3
(6) Cable W5
(7) Remote Disconnect Device
(8) Safety Switch
(9) Solenoid Connector
(10) Junction Box
(11) Rocket Motor Electrical Lead
(12) Linear Demolition Charge Electrical Lead

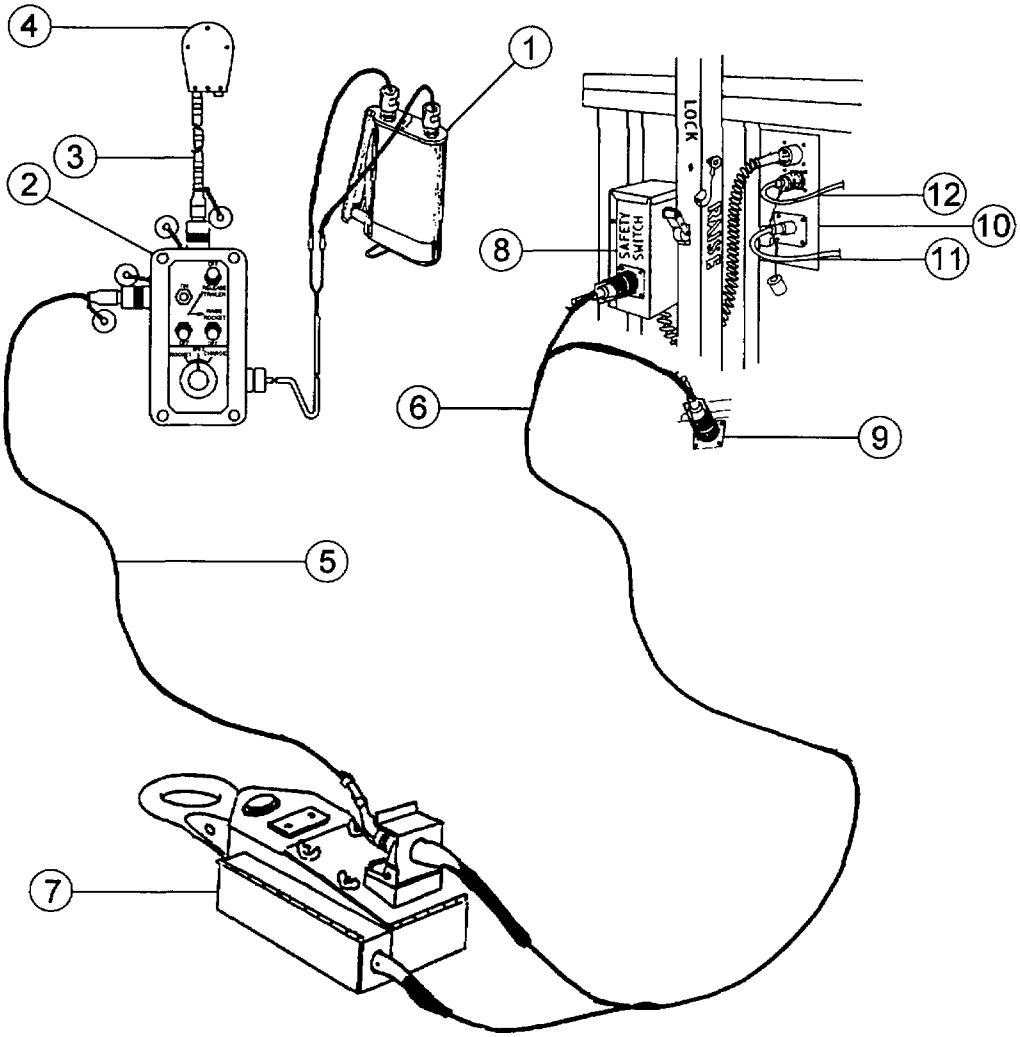

Figure 1.24. MOD 2/3 Electrical System

1.14 LINEAR DEMOLITION CHARGE M1134 SERIES FUZE. The fuze firing train consists of a rotor (1) (see Figure 1.25) with two Composition A5 booster leads (2), and two T20E1 Electric detonators (3) in the housing. An arming pin (4) is inserted in the rotor (1) and prevents the A5 leads (2) from aligning with the detonators (3) until the fuze is armed. A shear pin (5) inserted in the arming pin prevents accidental arming of the fuze. The fuze is mechanically armed during deployment of the linear demolition charge when the rocket motor applies a 400 lb force to the arming pin at the end of flight. This force breaks the shear pin (5) and pulls the arming pin (4) out of the rotor (1). Once the arming pin (4) has been pulled from the rotor, spring action rotates the rotor (1) so the A5 leads are aligned with the detonators (3).

Legend:

(1) Rotor
(2) A5 Booster Leads
(3) T20E1 Electric Detonators
(4) Arming Pin
(5) Shear Pin

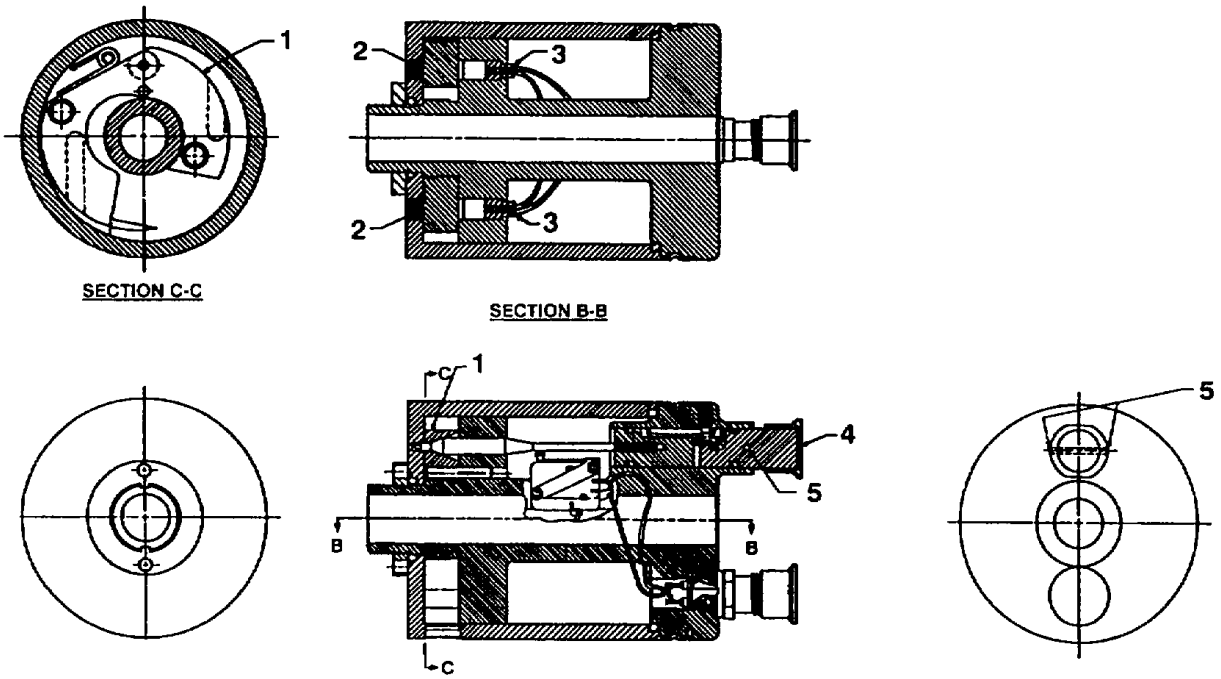

Figure 1.25. M1134 Fuze

1.15 HYDRAULIC SYSTEM.

1.15.1 MOD 0/1 HYDRAULIC SYSTEM. The hydraulic system (see Figure 1.26) allows the operator to raise or lower the launcher rail ether manually or remotely. A hydraulic actuating cylinder (1} is used to raise the launcher rail (2). It is connected to a hydraulic control valve (3). The hydraulic control valve directs the flow of fluid. When in the PRESSURIZE ACCUMULATOR position, the control valve allows hydraulic fluid to flow from the pump (4) reservoir to the accumulator (5), where it is pressurized by means of a hand pump (4) to 3,200-3,500 psi. When hydraulic fluid under pressure is applied to the actuating cylinder (1), the cylinder extends to raise the launch rail. When hydraulic pressure is released, the weight of the launch rail compresses the actuating cylinder (1) as it returns to the down position. Smooth operation of the rail is ensured by the pin hole in the fluid dampener which controls the rate of fluid flow.

Legend:

(1) Hydraulic Actuating Cylinder
(2) Launcher Rail
(3) Hydraulic Control Valve
(4) Hand Pump
(5) Accumulator

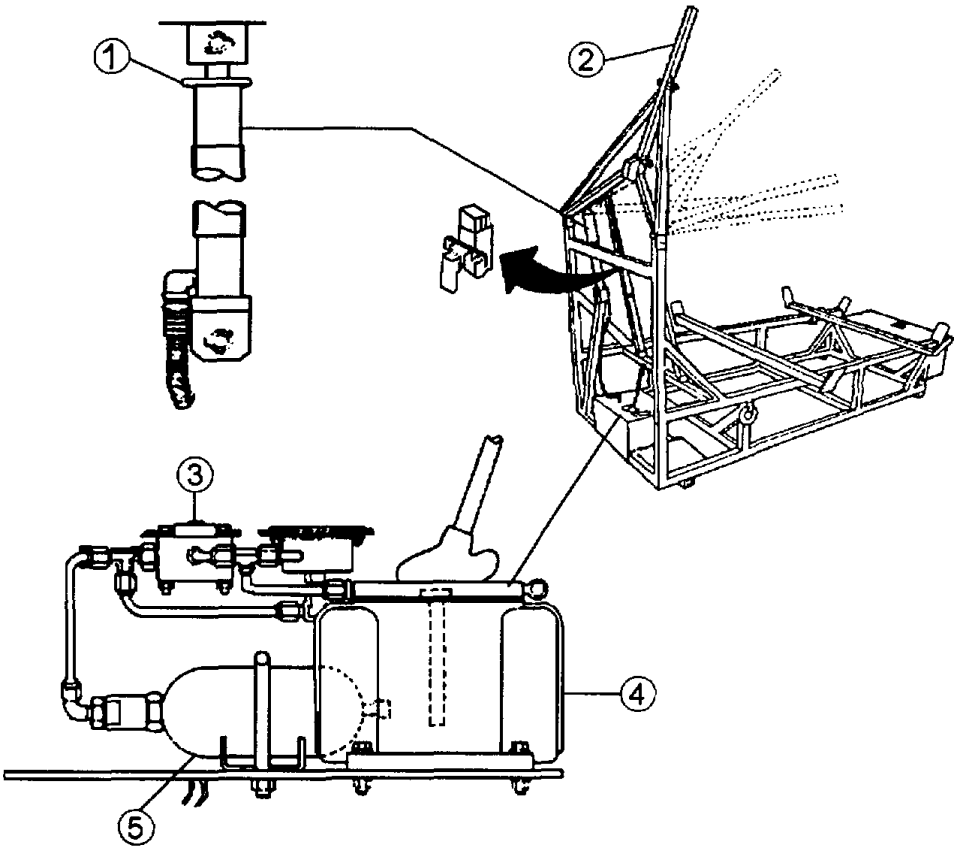

Figure 1.26. MOD 0/1 Hydraulic System

a. Manual Operation. Move the control valve to MANUAL RAISE/LOWER position (1) (see Figure 1.27). Move hand pump lever (2) to HOLD position Operate the hand pump (3). Hydraulic fluid under pressure will flow to the hydraulic actuating cylinder and the launcher rail will raise. When the hand pump lever (1) (see Figure 1.28) is moved to the RELEASE position, hydraulic fluid in the actuating cylinder will return to the hand pump reservoir and the launcher rail will lower.

Legend:

(1) MANUAL RAISE/LOWER
(2) Hand Pump Lever
(3) Hand Pump

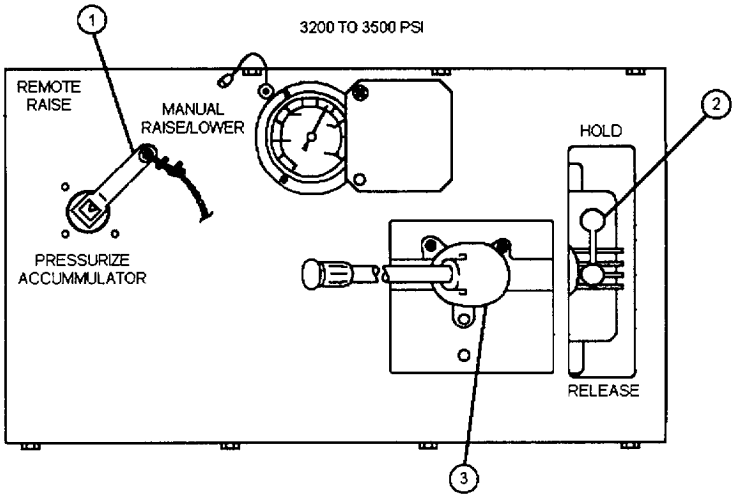

Figure 1.27. Manual Raise Launcher Rail

Legend:

(1) Hand Pump Lever

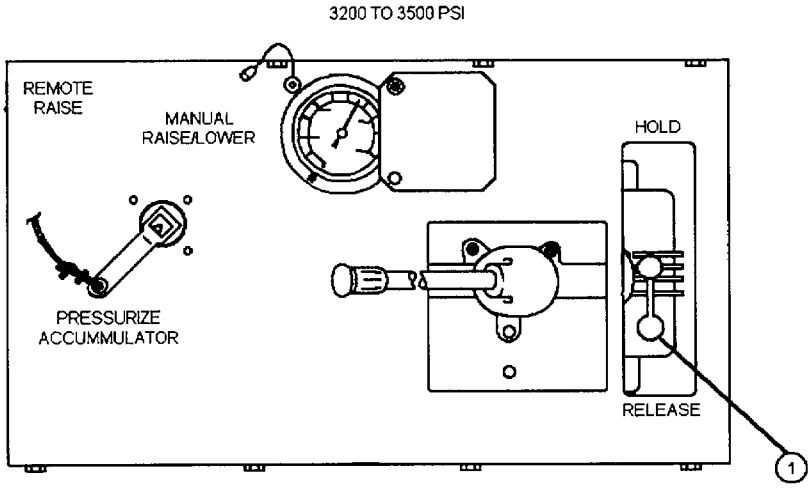

Figure 1.28. Manual Lower Launcher Rail

b. Remote Operation. Pressurize accumulator (1) (see Figure 1.29) in advance. The operator then pulls the lanyard (2) attached to the hydraulic control valve (3). This moves the valve to the REMOTE RAISE position (4) allowing pressurized fluid to flow from the accumulator to the hydraulic actuating cylinder and causes the rail to raise.

Legend:

(1) Accumulator
(2) Lanyard
(3) Hydraulic Control Valve
(4) REMOTE RAISE position

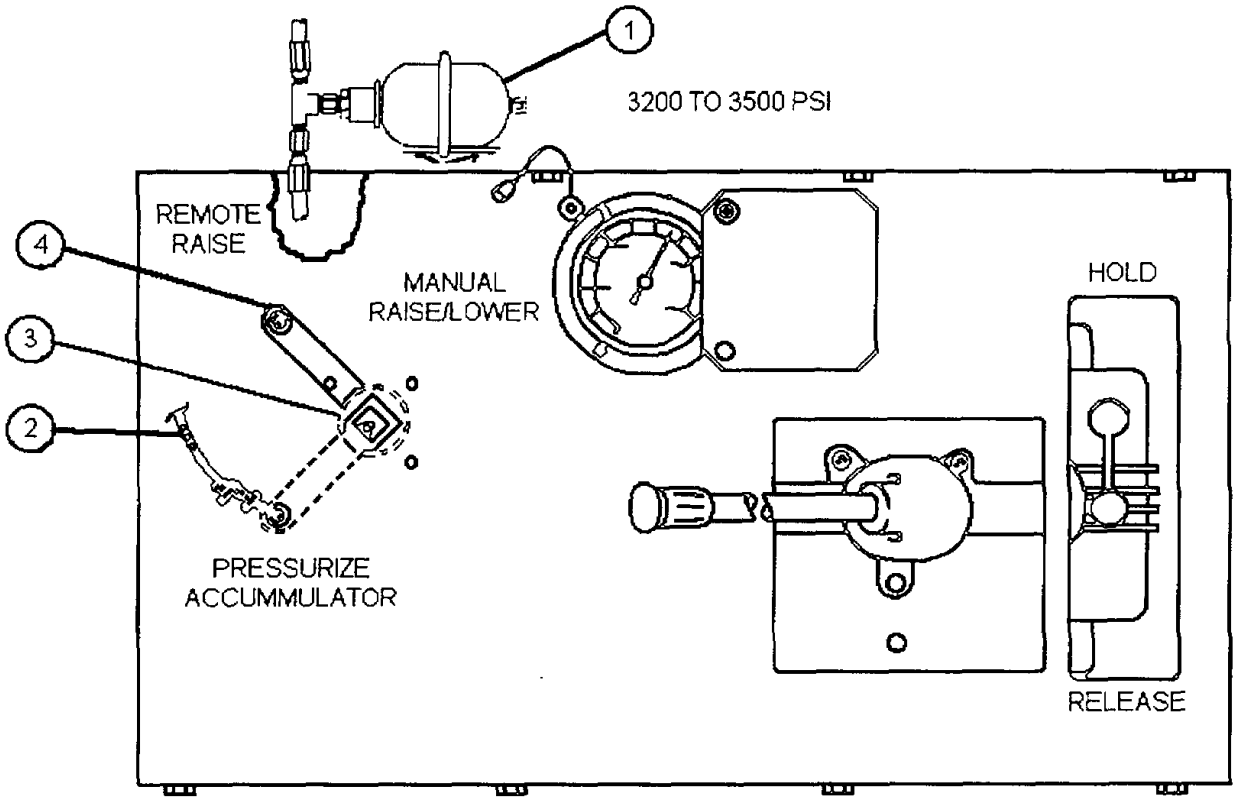

Figure 1.29. Remote Raise Launcher Rail

1.15.2 MOD 2/3 HYDRAULIC SYSTEM. The hydraulic system allows the operator to raise or lower the launcher rail either manually or remotely (see Figure 1.30). A hydraulic actuating cylinder (1) is used to raise the launcher rail. It is connected to a hydraulic control valve (2). The hydraulic control valve (2) directs the flow of fluid. When in the PRESSURIZE ACCUMULATOR position, the control valve (2) allows hydraulic fluid to flow from the pump reservoir (3) to the accumulator (4), where it is pressurized by means of a hand pump (5) to 3,200-3,500 psi. When hydraulic fluid under pressure is applied to the actuating cylinder (1), the cylinder extends to raise the launch rail. When hydraulic pressure is released, the weight of the launch rail compresses the actuating cylinder (1) as it returns to the down position. Smooth operation of the rail is ensured by the pin hole in the fluid dampener which controls the rate of fluid flow.

Legend:

(1) Hydraulic Actuating Cylinder
(2) Hydraulic Control Valve
(3) Pump Reservoir
(4) Accumulator
(5) Hand Pump
(6) Electric Solenoid Valve

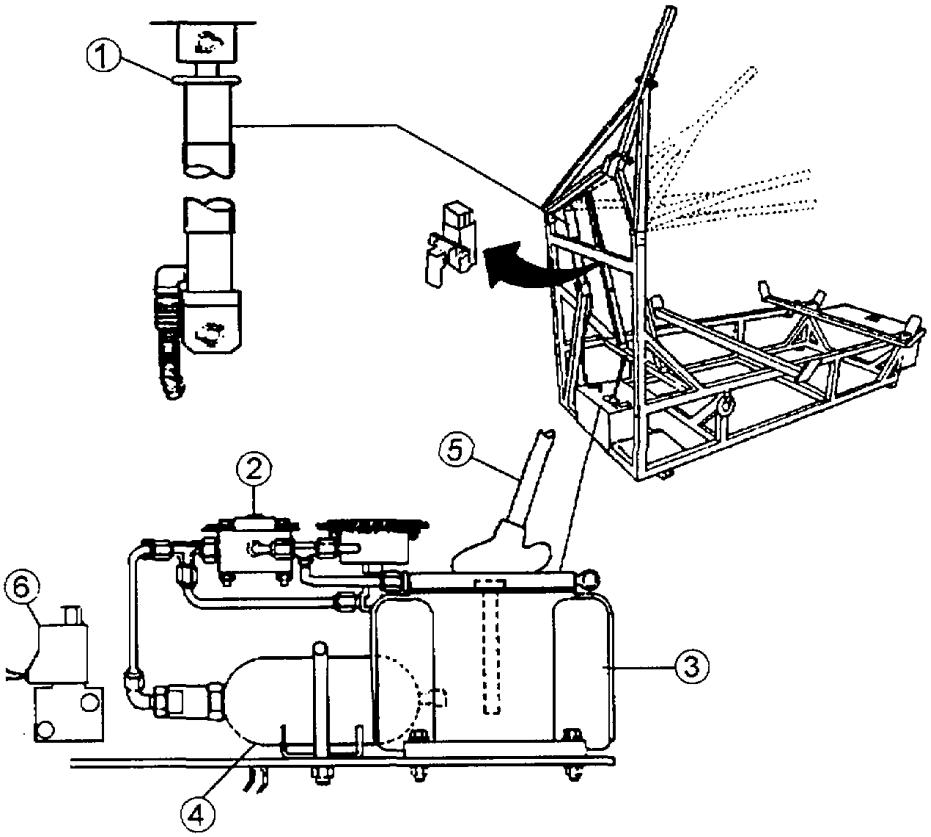

Figure 1.30. MOD 2/3 Hydraulic System

a. Manual Operation. Move the control valve to MANUAL RAISE/LOWER position (1) {see Figure 1.31). Move hand pump lever (2) to HOLD position. Operate the hand pump (3). Hydraulic fluid under pressure will flow to the hydraulic actuating cylinder and the launch rail will raise. When the hand pump lever is moved to the RELEASE position (1) (see Figure 1.32), hydraulic fluid in the actuating cylinder will return to the hand pump reservoir and the launch rail will lower.

Legend:

(1) MANUAL RAISE/LOWER position
(2) Hand Pump Lever
(3) Hand Pump

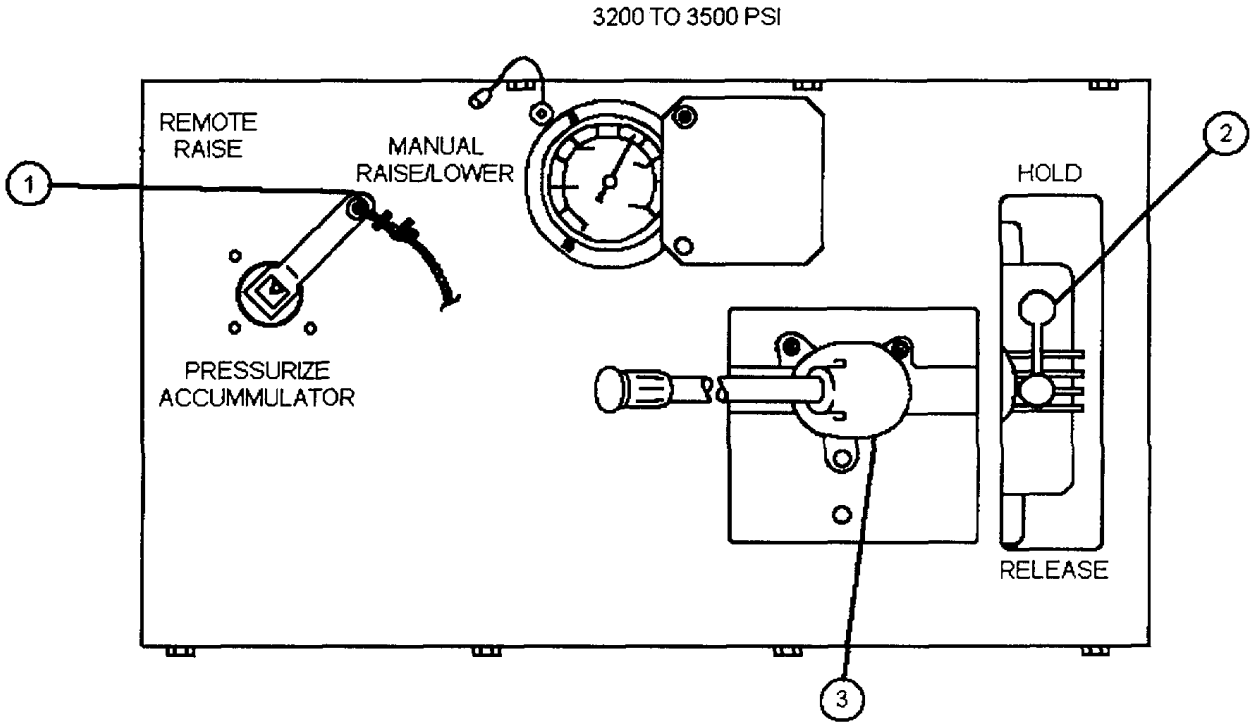

Figure 1.31. Manual Raise Operation

Legend:

(1) RELEASE position

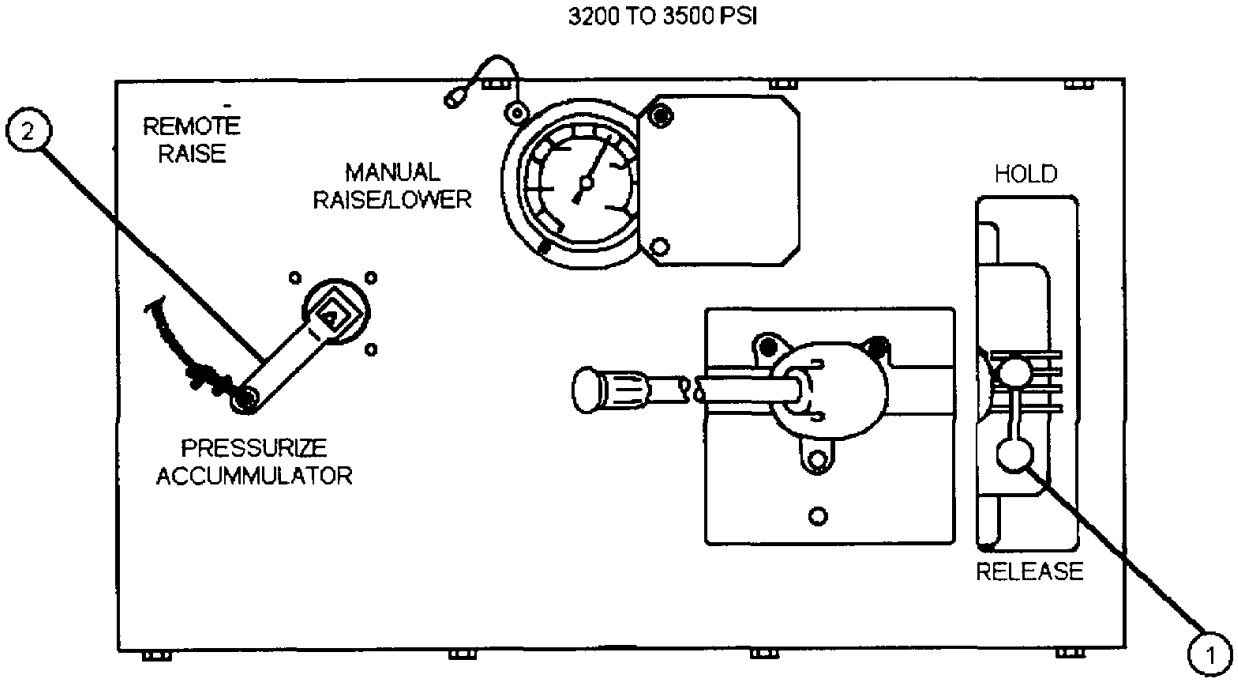

Figure 1.32. Manual Lower Operation

b. Remote Operation. Pressurize accumulator in advance using the hand pump (1)(see Figure 1.33). Using the selector switch assembly (2), move VEHICLE POWER (3) and RAISE ROCKET (4) toggle switches simultaneously to the ON position and hold until rail is raised. The electric solenoid valve will bypass the hydraulic control valve in the remote raise operation. Hydraulic fluid under pressure in the accumulator will flow through the solenoid valve to the actuating cylinder and the launch rail will raise.

Legend:

(1) Hand Pump
(2) Selector Switch Assembly
(3) Vehicle Power Switch
(4) RAISE ROCKET Switch

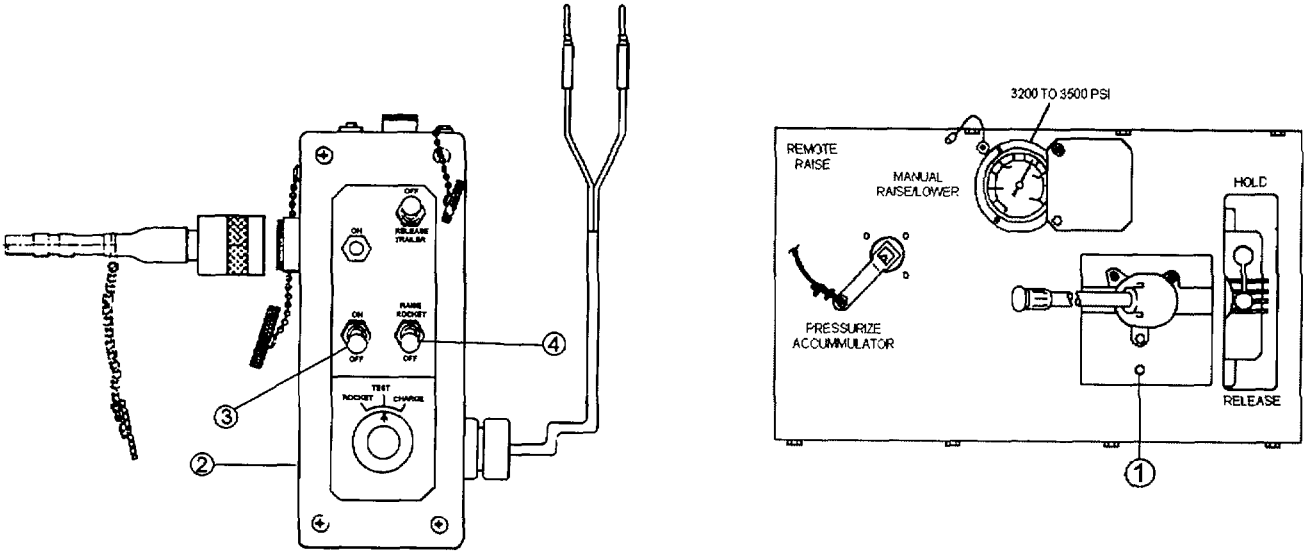

Figure 1.33. Remote Raise Launch Rail

THIS PAGE INTENTIONALLY LEFT BLANK

CHAPTER 2
OPERATING INSTRUCTIONS

Section I. DESCRIPTION AND USE OF OPERATOR'S CONTROLS AND INDICATORS

2.1 INTRODUCTION TO USE OF MICLIC. Tables 2.1 through 2.4 provide functional description of the MICLIC components and controls.

Legend:

(1) Hydraulic Control Valve Lever
(2) Pump Valve Lever
(3) Hydraulic Hand Pump Handle
(4) Hydraulic Pressure Gauge
(5) Gauge Cover
(6) Ball-Lock Pin
(7) Fill Plug and Dipstick
(8) Lanyard

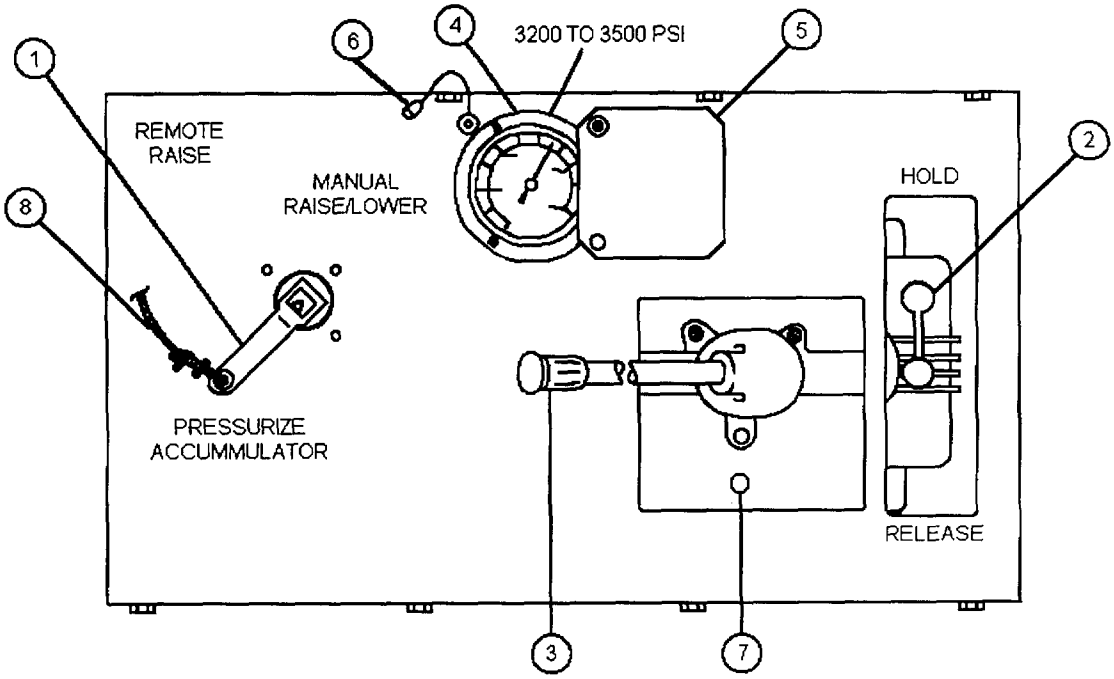

Figure 2.1. Hydraulic System Control Panel

Table 2.1. Hydraulic System

Key	Control or Indicator	Function
	Hydraulic System	Located at the rear of the launcher. Raises and lowers the launcher rail.
1	Hydraulic Control Valve Lever	Directs flow of hydraulic fluid.
	MANUAL RAISE/LOWER Position	Fluid flow is from pump to cylinder or. vise/versa
	PRESSURE ACCUMULATOR Position	Fluid flow is from pump to accumulator.
	REMOTE RAISE Position	Fluid flow is from accumulator to cylinder.
	Remote Control Lanyard	Allows the operator to control the valve from a remote position.
NA	Solenoid Valve (Mod 2/3)	When activated, allows fluid to bypass the hydraulic control valve and redirects flow of fluid from the accumulator to hydraulic cylinder. Allows the operator to control the valve with the selector switch assembly from a remote position.
2	Pump Valve Lever	Has two positions.
	HOLD (Closed) Position	Allows hand pump to deliver hydraulic pressure.
	RELEASE (Open) Position	Allows hydraulic fluid to flow back into the pump which releases pressure in system.
3	Hand Pump	Used to pressurize accumulator or for pumping hydraulic fluid to activate the cylinder and raise the rail.
4	Pressure Gage	Indicates the system's pressure.

Legend:

(1) M34 Blasting Machine
(2) Selector Switch Box
(3) Cable No. 2
(4) Cable No. 3
(5) Launcher Safety Switch
(6) Linear Charge Junction Box
(7) Rocket Motor Electrical Lead
(8) Linear Charge Electrical Lead

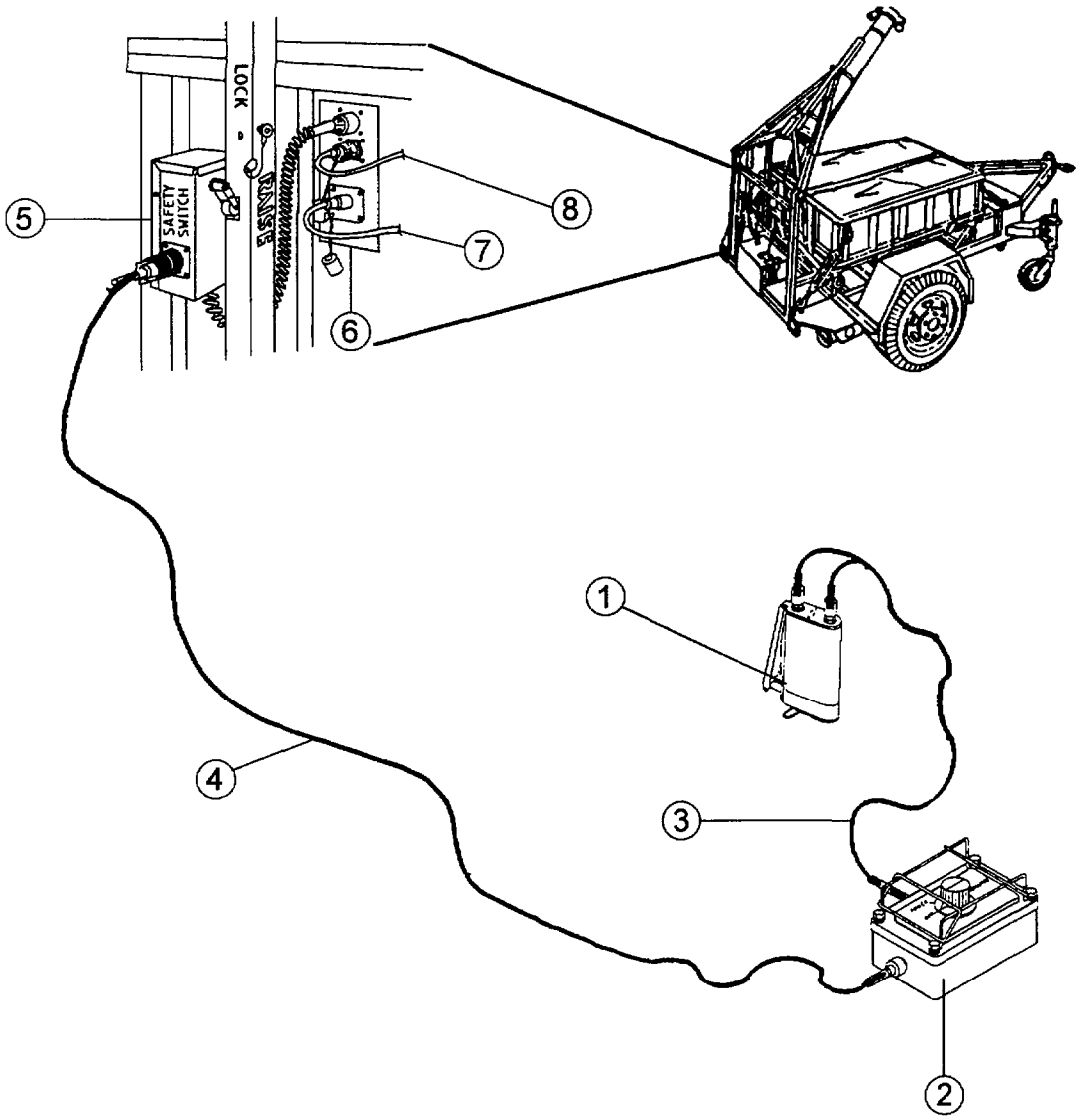

Figure 2.2. MOD 0/1 Electrical System

Legend:

(1) M34 Blasting Machine
(2) Selector Switch Assembly
(3) Cable W6
(4) NATO Receptacle
(5) Cable W3
(6) Cable W5
(7) Remote Trailer Release
(8) Safety Switch
(9) Junction Box
(10) Rocket Motor Electrical Lead
(11) Linear Demolition Charge Electrical Lead
(12) Solenoid Connector

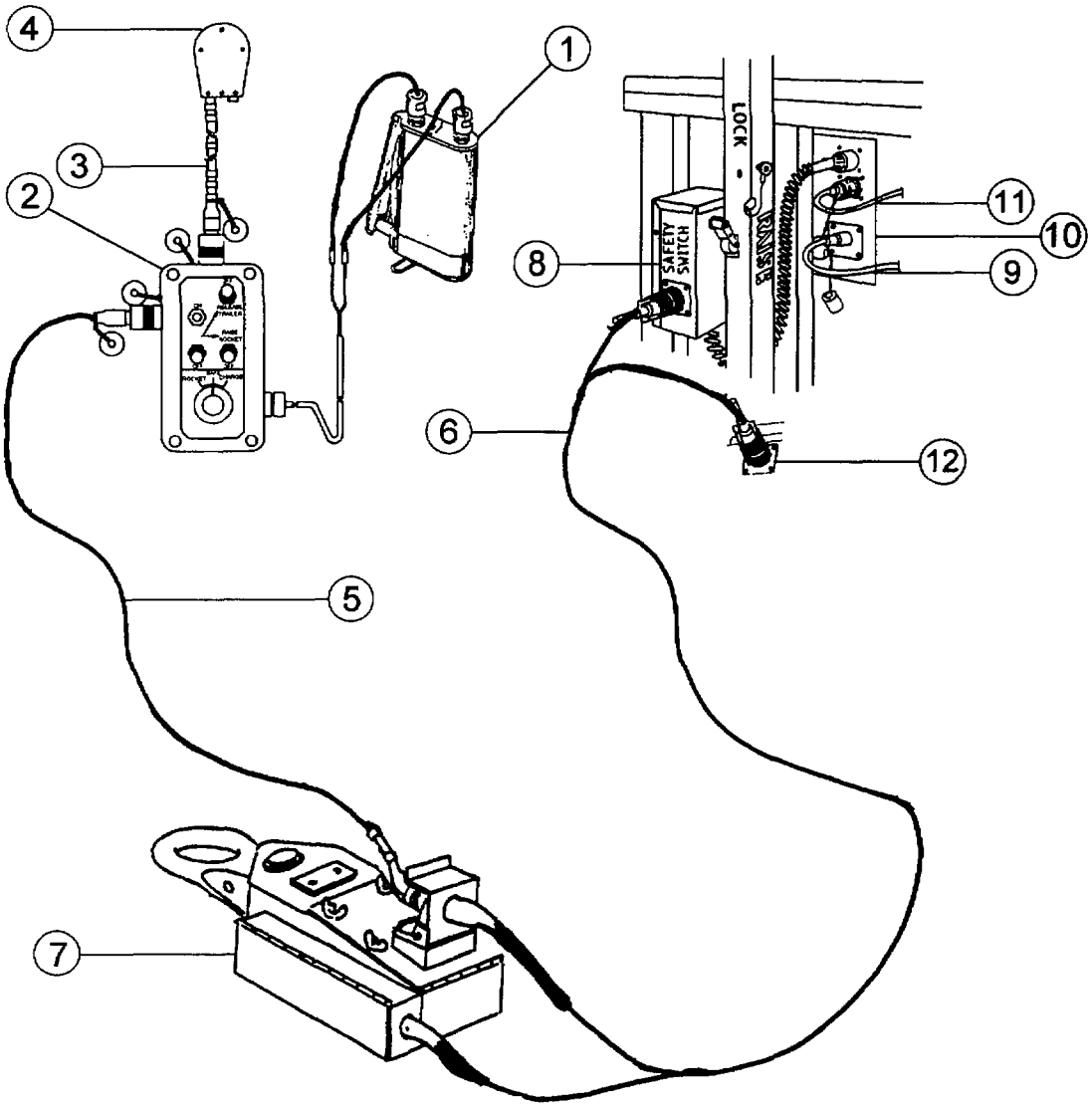

Figure 2.3. MOD 2/3 Electrical System

Table 2.2. Electrical System Components

Key	Control or Indicator	Function
	Electrical System	Provides electrical power from the towing vehicle, the M34 Blasting Machine or the M51 Test Set for rocket ignition, linear demolition charge detonation or trailer quick disconnect (Mods 2/3).
2	Selector Switch Box MOD 0/1 (see Figure 2.2)	Consists of two electrical cables and a selector switch box with a four-position, pull-up rotary switch.
	OFF Position	Does not allow system operator to conduct electrical continuity checks, to fire the rocket motor or to detonate the linear demolition charge.
	POWER Position	Allows system operator to test continuity of cable assembly No. 2 with the M51 Blasting Cap Test Set.
	ROCKET Position	Allows electric current to flow from M34 Blasting Machine or M51 Blasting Cap Test Set, via cable No. 2 through the selector switch box, to the electrical circuit for the rocket.
	CHARGE Position	Allows electric current to flow from M34 Blasting Machine or M51 Blasting Cap Test Set, via cable No. 2 through the selector switch box, to the electrical circuit for the linear demolition charge.
2	Selector Switch Assembly MOD 2/3 (see Figure 2.3)	Enables system operator to direct vehicle electrical power to either trailer disconnect device or launcher rail solenoid valve. Also directs electrical power from M34 Blasting Machine and M51 Blasting Cap Test Set to rocket motor or fuze on linear demolition charge through receptacles on rear of linear demolition charge container.
	a. Vehicle Power Toggle Switch	ON position. Permits electrical power to operate trailer disconnect device or to raise launcher rail.

Table 2.2. Electrical System Components (Cont)

Key	Control or Indicator	Function
	c. RAISE ROCKET Toggle Switch	Raises rocket launcher rail when toggled simultaneously with vehicle power toggle switch .
	d. RESET Button	Resets the circuit breaker (in switch assembly housing).
	e. TRAILER RELEASE Toggle Switch	Remotely disconnects trailer from tow vehicle when toggled simultaneously with the vehicle power toggle switch.
	f. Selector Switch Selector Knob	A pull-up rotary switch with three positions:
	(1) ROCKET Position	Allows electric current to flow from M34 Blasting Machine or M51 Blasting Cap Test Set, via cable No. 2 through selector switch assembly, to electrical circuit for rocket motor.
	(2) TEST/SAFE Position.	Neutral Position.
	(3) CHARGE Position.	Allows electric current to flow from M34 Blasting Machine or M51 Blasting Cap Test Set, via cable No. 2 through selector switch assembly, to electrical circuit for linear demolition charge.
5	Safety Switch Assembly (Figure 2.2)	Prevents the rocket motor or linear demolition charge from firing until launch rail is elevated to firing position.
8	Safety Switch Assembly (Figure 2.3)	
	Roller-Lever Switch	Completes circuit to receptacle No. 1 as launcher rail approaches 45-47° elevation, which in turn completes circuits to linear demolition charge and rocket motor.
NA	a. Male Shorting Plug	Used for continuity check in container charge receptacle.
	b. Female Shorting Plug	Used for continuity check in container rocket motor receptacle.

Figure 2.4. M34 Blasting Machine and M51 Blasting Cap Test Set

Table 2.3. M34 Blasting Machine and M51 Blasting Cap Test Set

Key	Control or Indicator	Function
1	M34 Blasting Machine Internal Test Light	Indicates sufficient voltage is present to launch the rocket motor/detonate the line charge.
2	M51 Blasting Cap Test Set	
	a. Indicator Lamp With Shunting Wire	Lamp should light.
	b. Indicator Lamp Without Shunting Wire	Lamp should not light.

Legend:

(1) Clinometer
(2) Front and Rear Hand Knobs
(3) Alignment Pins
(4) Rocket Release Mechanism
(5) Detent Assemblies
(6) Ball-Lock Pins
(7) Launch Position Indicator

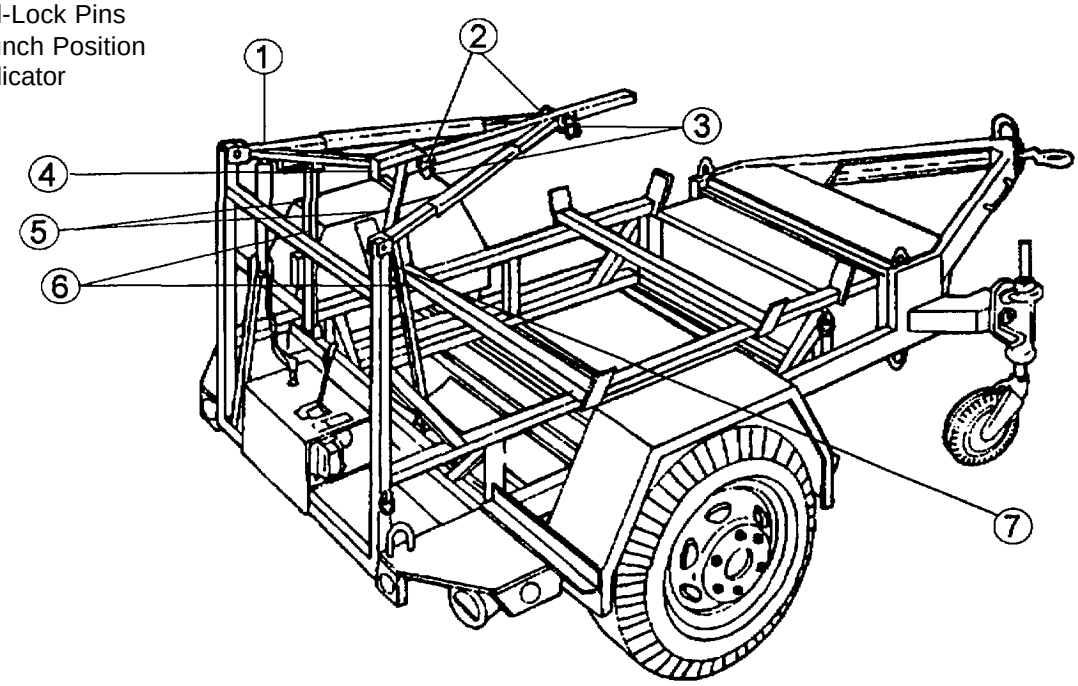

Figure 2.5. Launcher Rail, Supports, and Launcher Frame Weldment Assembly.

Table 2.4. Launcher Rail, Supports, and Launcher Frame Weldment Assembly

Key	Control or Indicator	Function
1	Clinometer	Indicates the angle in degrees that the launcher rail is raised.
2	Front and Rear Hand Knobs	Exert Pressure on rocket bands to hold rocket motor in place and prevent side-to-side movement.
3	Alignment Pins	Align rocket motor on launcher rail.
4	Rocket Release Mechanism	Locks rocket motor on launcher rail during transportation.

Table 2.4. Launcher Rail, Supports, and Launcher Frame Weldment Assembly (Cont)

Key	Control or Indicator	Function
5	Detent Assembles	To engage, pull down on detent levers. Once engaged, prevents launcher rail from lowering, after launcher angle has been achieved. To disengage, push up on detent levers. When disengaged, allows launcher rail to lower.
6	Ball-Lock Pins	LOCK position. Pins lock launcher rails at different elevations. When launcher is in stowed condition, insert ball-lock pins in LOCK position.
		RAISE position. Prevent launcher rail from raising above 45-47°.
7	Launch Position Indicator (**ARMY ONLY**)	White painted marks on inner launcher rail supports indicate to crew that launcher rail is at desired launch angle. If vertical white mark appears below the horizontal white mark (T-stripe), launcher rail is too high for proper deployment of rocket motor.

Section II. OPERATOR PREVENTIVE MAINTENANCE CHECKS AND SERVICES

2.2 PREVENTIVE MAINTENANCE CHECKS AND SERVICES (PMCS). Perform PMCS on the MK 155 Launcher regularly to make sure that it is fully operational and reliable. Failure to perform PMCS may put the Launcher in a Not Mission Capable Status. Perform the following operations with trailer or launcher positioned on level ground. TM 9-2330-247-14&P contains PMCS for the M353 Trailer and TM 9-2330-205-14&P contains PMCS for the M200A1 Trailer.

2.3 PMCS DEFINITIONS. The following definitions are included to help you determine the severity of leaks and corrosion.

a. Leaks. Leaks are identified as Class I, Class II, or Class III. Unless otherwise noted, the level of acceptance for fluid loss shall be Class I.

(1) Class I. Seepage of fluids (as indicated by wetness or discoloration) not great enough to form drops.

(2) Class II. Leakage of fluid great enough to form drops but not enough to cause drops to drip from item being checked/inspected.

(3) Class III. Leakage of fluid great enough to form drops that fall from the item being checked/inspected.

b. Corrosion. Corrosion damage is divided into four stages. Stages 1 and 2 corrosion shall be properly treated per standard practices prior to being painted. Corrosion not affecting form, fit or function shall be properly treated and painted without parts replacement. If stage 3 and 4 corrosion is present on critical areas, evacuate item inspected to organizational or Direct Support for repair or disposition.

(1) Stage 1. Red, black and white corrosion deposits on surface, etching and pitting. Base metal is sound.

(2) Stage 2. Powdered, granular or scaled condition. Base metal is sound.

(3) Stage 3. Surface condition and corrosion deposits are similar to Stage 2, except that metal in corroded area is unsound and small pin holes may be present.

(4) Stage 4. No metal remains at point of severest corrosion. Corrosion holes in the area or base metal is completely missing.

2.4 PMCS PROCEDURES. PMCS Table 2.5 is a four column table. The columns are defined as follows:

a. Item No. Column **ARMY ONLY**. When recording results of PMCS, use these numbers in the "TM Number column on DA Form 2404, Equipment Inspection and Maintenance Worksheet.

b. Interval Column. Indicates when to do a certain check or service. The subcolumns headed "B," "D,' "A," and "Q/S" contain dots opposite the required checks.

(1) "B" Column. Indicates checks to be performed before operating the equipment.

(2) "D" Column. Indicates checks to be performed during equipment operation (between line charge deployment.

(3) "A" Column. Indicates checks to be performed after operating the equipment.

(4) "Q/S" Column. Indicates checks to be performed every quarter for Army but semi-annual for Marine Corps. IF PMCS were not performed in the previous quarter/semi-annual. Then perform PMCS in conjunction with the next quarter's/semi-annual's requirements.

c. Item to be Inspected/Procedure Column. Indicates how to do the required checks and services. Carefully follow these instructions.

(1) Items listed in this column are identified by their common names. If tools are not available or if additional procedures are required, then have Unit Maintenance perform the work.

(2) **ARMY ONLY**. If equipment does not perform as required, troubleshoot with proper equipment. Report any malfunctions or failures on DA Form 2404, IAW DA Pam 738-750, The Army Maintenance Management System (TAMMS).

d. Not Fully Mission Capable If Column. Tells you when and why equipment cannot be used. Contains criteria that will cause equipment to be classified not Fully Mission Capable because of launcher's inability to perform its primary mission.

NOTE

THE TERM MISSION CAPABLE MEANS EQUIPMENT IS ON HAND AND IS ABLE TO PERFORM ITS COMBAT MISSIONS (SEE DA PAM 738-750).

NOTE

ALWAYS KEEP IN MIND THE CAUTIONS AND WARNINGS WHEN ERFORMING PMCS.

Table 2.5. Operator Preventive Checks and Services

B-Before Operation **D-During Operation** **A-After Operation** **Q-Quarterly**
S-Semi-annually

Item No.	Interval				Item to be Inspected Procedure	Not Fully Mission Capable If:
	B	D	A	Q/S		
1	•	•	•	•	**LAUNCHER RAIL**	
	•	•		•	a. Check alignment pins (1)(see Figure 2.6), hand knobs (2), crosspieces (3), and bridle cable sheaths (4) for damaged or missing parts.	Parts missing or damaged. Hand knob assembles are seized or do not move freely.
					NOTE **LOCALLY THE MANUFACTURED LAUNCHER RAIL ALIGNMENT TOOL CAN BE USED IF REQUIRED. (SEE PARAGRAPH G-4).**	
	•	•		•	b. Visually check launch rail groove for obstructions, damage, and distortions.	Rail groove is obstructed or distorted.
			•	•	c. Lubricate alignment pins (1), hand knobs (2), and crosspieces (3) IAW paragraph 3.1.	
			•	•	d. Lubricate launcher rail groove (5) IAW paragraph 3.1.	

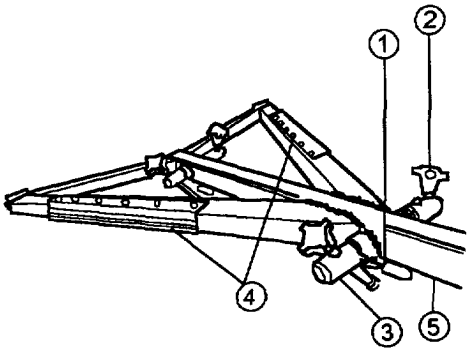

Figure 2.6. Launcher Rail

Table 2.5. Operator Preventive Checks and Services (Cont)

B-Before Operation **D-During Operation** **A-After Operation** **Q-Quarterly**
S-Semi-annually

Item No.	Interval B	Interval D	Interval A	Interval Q/S	Item to be Inspected Procedure	Not Fully Mission Capable If:
2	•	•	•	•	**LAUNCHER RAIL SUPPORTS**	
	•	•		•	a. Check rail supports (1)(see Figure 2.7, and detent assemblies (2) for damaged or missing parts. Launcher rail must be raised to check inner rail supports. Check detent assemblies (2) for locking rail at 45°. Raise launcher until detent assembly engages, slowly release hydraulic pressure, detents should hold launcher at 45°. Visually check to ensure that pin and its weldment (3) on right launcher rail support are not damaged or bent. **ARMY ONLY**, check to ensure that white T-stripe is visible on front (side facing towing vehicle) of inner rail support (1).	Parts missing or damaged. White T-stripe is not visible on front of inner rail support.
			•	•	b. Lubricate rail supports (1) and detent assemblies (2) IAW paragraph 3.1.	
					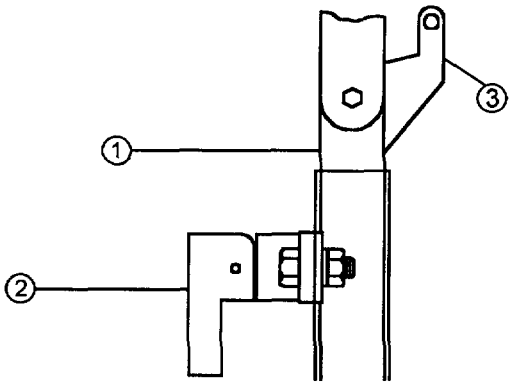 *Figure 2.7. Launcher Rail Supports*	

Table 2.5. Operator Preventive Checks and Services (Cont)

B-Before Operation **D-During Operation** **A-After Operation** **Q-Quarterly**
S-Semi-annually

Item No.	Interval B	Interval D	Interval A	Interval Q/S	Item to be Inspected Procedure	Not Fully Mission Capable If:
3	•	•	•	•	**BALL-LOCK PINS**. Check ball-lock pins (1) (see Figure 2.8) for damaged or missing parts. Ensure ball-lock pins are attached to launcher rail supports.	Ball-lock pin is missing or unserviceable.
					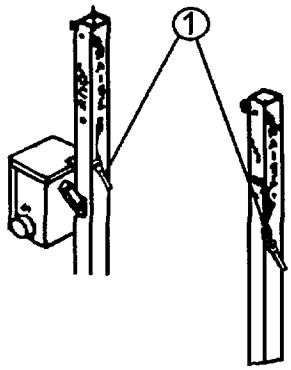 *Figure 2.8. Ball Lock Pins*	
4	•		•	•	**SAFETY SWITCH**.	
	•		•	•	a. Check safety switch for damaged or missing parts. When launcher rail is raised, ensure roller (1)(see Figure 2.9) moves freely.	Parts missing or damaged or roller on safety switch does not move freely.
			•	•	b. Lubricate roller IAW paragraph 3.1.	
					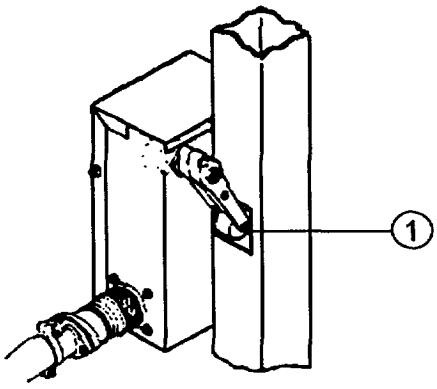 *Figure 2.9. Safety Switch*	

Table 2.5. Operator Preventive Checks and Services (Cont)

B-Before Operation **D-During Operation** **A-After Operation** **Q-Quarterly**
S-Semi-annually

Item No.	Interval				Item to be Inspected Procedure	Not Fully Mission Capable If:
	B	D	A	Q/S		
5	•			•	**FRAME AND ATTACHING HARDWARE**. Check for damaged or missing parts see (Figure 2.10). Using socket wrench, check tightness of U-bolt mounting hardware.	Parts missing or damaged.
6	•		•	•	**SUPPORT EQUIPMENT STOWED IN STORAGE CONTAINER**. Check for missing or damaged support equipment stowed in storage container (Figure 2.10).	Cables, selector switch assembly and selector switch box are missing or unserviceable.
7			•	•	**LAUNCHER JOINTS**. Lubricate all joints lAW paragraph 3.1.	Joints are damaged or do not move freely.
					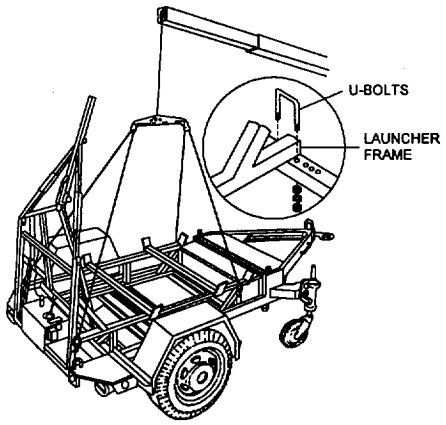 LENGTH OF CABLE NOT TO SCALE *Figure 2.10. Frame and Attaching Hardware*	

Table 2.5. Operator Preventive Checks and Services (Cont)

B-Before Operation **D-During Operation** **A-After Operation** **Q-Quarterly**
S-Semi-annually

Item No.	Interval				Item to be Inspected Procedure	Not Fully Mission Capable If:
	B	D	A	Q/S		
8	•		•	•	**ROCKET RELEASE MECHANISM**.	Release mechanism is damaged or fails to operate.
					NOTE **THIS OPERATION MUST BE PERFORMED BY RAISING RAIL TO 45-47° AND LOWERING RAIL.**	
	•			•	a. Check release mechanism (1) (see Figure 2.11) for damage and ease of operation. Ensure that cam (2) moves forward when handle (3) is pulled.	
	•			•	b. Ensure cotter pin (4) is not missing or damaged. Ensure that cam (2) is forward and under pin weldment (5) or right launcher rail support.	
			•	•	c. Remove cover (6) and lubricate all moving parts AW paragraph 3.1.	
					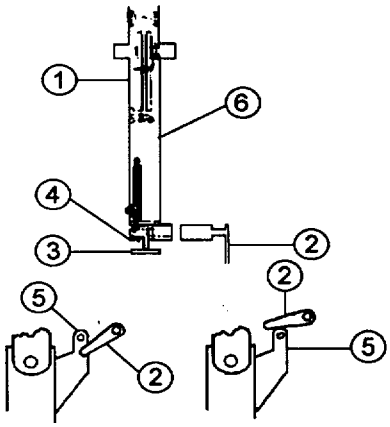 RIGHT WRONG *Figure 2.11. Rocket Release Mechanism*	

Table 2.5. Operator Preventive Checks and Services (Cont)

B-Before Operation **D-During Operation** **A-After Operation** **Q-Quarterly**
S-Semi-annually

Item No.	Interval B	Interval D	Interval A	Interval Q/S	Item to be Inspected Procedure	Not Fully Mission Capable If:
9	•		•	•	**COUPLER (TRAILER DISCONNECT DEVICE)(ARMY ONLY).**	
	•				a. Ensure the jaw lock bolt assembly (1) (see Figure 2.12) is removed and properly stored.	
	•			•	b. Check disconnect device for damage and ease of operation (connected to vehicle power).	
			•	•	c. Check for buildup of debris and water in disconnect housing (2) and actuator housing (3).	
			•		d. Ensure linear actuator (3) is reset after operation and jaws are closed.	
			•		e. Ensure the jaw lock bolt assembly (1) is installed in locked jaw position (5).	
					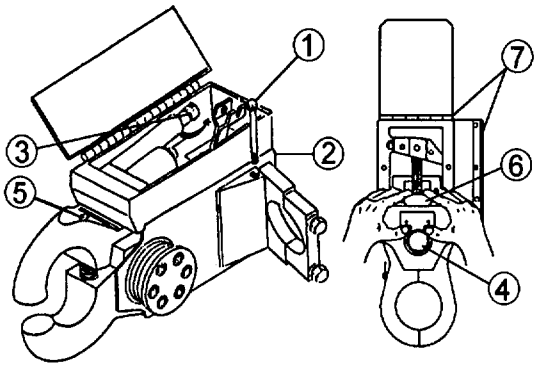 *Figure 2.12. Coupler (Trailer Disconnect Device (Army Only)*	
			•	•	f. Lubricate jaw pivot (4), roller carriage (6), and housing cover hinges (7) with lubricating oil IAW para 3.1.	
			•	•	g. Lubricate seven cover thumbscrew holes in the coupler LAW paragraph 3.1.	

Table 2.5. Operator Preventive Checks and Services (Cont)

B-Before Operation **D-During Operation** **A-After Operation** **Q-Quarterly**
S-Semi-annually

Item No.	Interval				Item to be Inspected Procedure	Not Fully Mission Capable If:
	B	D	A	Q/S		
10	•	•	•	•	**HYDRAULIC ASSEMBLY**. Check for leaks from cracked hoses (1) see (Figure 2.13), cracked lines (2), and loose fittings (3), and check solenoid valve (MOD 2/3) for leaks and/or damage. (Service IAW paragraph 3.1)	There are class III leaks or pans are missing.
					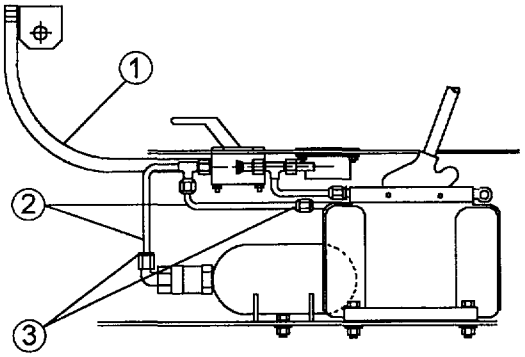 *Figure 2.13. Hydraulic Assembly*	
11	•		•	•	**HYDRAULIC CYLINDER**. Check for leaks (1)(see Figure 2.14) and missing or broken parts.	
					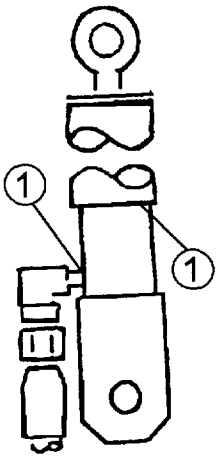 *Figure 2.14. Hydraulic Cylinder*	

Table 2.5. Operator Preventive Checks and Services (Cont)

B-Before Operation **D-During Operation** **A-After Operation** **Q-Quarterly**
S-Semi-annually

Item No.	Interval				Item to be Inspected Procedure	Not Fully Mission Capable If:
	B	D	A	Q/S		
					NOTE PUMP RESERVOIR (SEE Figure 2.16) HOLDS ONLY 2 1/2 QTS (2.4L) OF HYDRAULIC FLUID (MIL-H-6083). DO NOT OVERFILL. NOTE SOME HAND PUMPS HAVE DIPSTICKS; SOME DO NOT. IF DIPSTICK IS PRESENT, CHECK FLUID LEVEL WITH DIPSTICK UNSCREWED. IF DIPSTICK IS NOT PRESENT, OIL LEVEL SHOULD BE 4 INCHES BELOW THE TOP OF THE FILL PLUG HOLE.	

Table 2.5. Operator Preventive Checks and Services (Cont)

B-Before Operation **D-During Operation** **A-After Operation** **Q-Quarterly**
S-Semi-annually

Item No.	Interval B	Interval D	Interval A	Interval Q/S	Item to be Inspected Procedure	Not Fully Mission Capable If:
12	•		•	•	**HAND PUMP**	
	•		•	•	a. With rail in fully lowered position, check fluid level visually or with dipstick (1)(see Figure 2.15). Fill as needed with hydraulic fluid, NSN 9150-00-935-9807/9808.	There are class III leaks or pump is unserviceable.
					NOTE **IF DRAIN PLUG IS PRESENT, IT IS LOCATED ON THE BOTTOM OF THE PUMP. IF IT IS NECESSARY TO DRAIN HYDRAULIC FLUID, FOLLOW PROCEDURES IN Paragraph 4.20. CHANGE HYDRAULIC FLUID SEMI-ANNUALLY.**	
	•			•	b. Check hydraulic fluid for contamination (milky). Drain and refill hydraulic system following procedures in paragraph 4.20.	
	•			•	c. Check that hand pump handle (2) is not missing or damaged.	Hand pump handle is missing or unserviceable.
					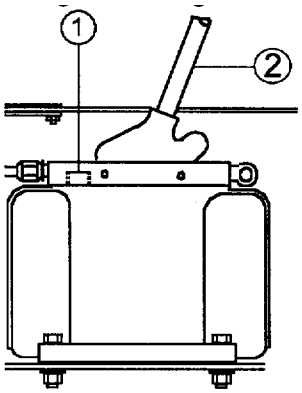 *Figure 2.15. Hand Pump*	
	•			•	d. Check for loose or missing parts	

Table 2.5. Operator Preventive Checks and Services (Cont)

B-Before Operation **D-During Operation** **A-After Operation** **Q-Quarterly**
S-Semi-annually

Item No.	Interval B	Interval D	Interval A	Interval Q/S	Item to be Inspected Procedure	Not Fully Mission Capable If:
13	•			•	**RELEASE VALVE**. Check pump valve lever (1)(see Figure 2.16) for damage and ease of operation.	There are class III leaks or valve does not work.
14	•			•	**HYDRAULIC CONTROL VALVE**.	
					Check hydraulic control valve (2) for damage, leaks, and ease of operation	There are class III leaks or valve does not work.
					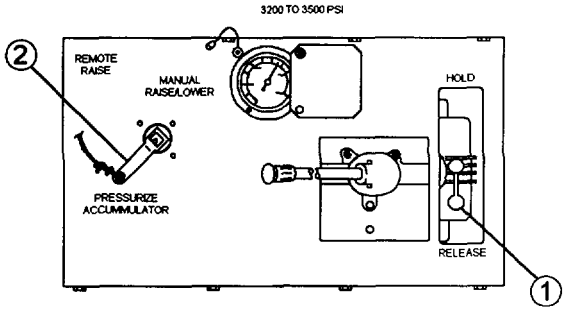 *Figure 2.16. Hydraulic Control Valve*	
					NOTE **THIS ILLUSTRATION APPLIES TO BOTH STEPS 13 AND 14.**	
15					**HYDRAULIC PRESSURE GAGE**.	
	•			•	a. Check gage cover assembly for missing or damaged parts and/or operation of pin and cover.	
	•			•	b. Check for missing or damaged gage.	Gage is missing or does not work.

Table 2.5. Operator Preventive Checks and Services (Cont)

B-Before Operation **D-During Operation** **A-After Operation** **Q-Quarterly**
S-Semi-annually

Item No.	Interval				Item to be Inspected Procedure	Not Fully Mission Capable If:
	B	D	A	Q/S		
16			•	•	**COMPLETE LAUNCHER**.	
					a. Inspect for corrosion, dirt, and debris. Clean IAW operator maintenance procedures in chapter 3. Notify support maintenance to spot paint as necessary	Corrosion inhibits operation of launcher.
					b. Visually inspect welds.	Welds are cracked or broken.
					c. Conduct system electrical continuity check. Refer to para. 2.7.9 for MOD 0/1 and para 2.7.14 for MOD 2/3.	System is inoperative.
					NOTE **WHEN OPERATING THE LAUNCHER RAIL WITHOUT A ROCKET MOUNTED, AN OPERATING PRESSURE OF LESS THAN 3,000 PSI IS RECOMMENDED TO PREVENT DAMAGE TO THE LAUNCHER RAIL, LAUNCHER SUPPORTS AND BALL-LOCK PINS.**	
17	•			•	**HYDRAULIC SYSTEM**. Perform pressure checkout IAW paragraph 2.6.1a. Raise and lower rail.	Launch rail does not raise/lower properly or will not maintain pressure.
18	•		•	•	**M34 BLASTING MACHINE**. Check for proper functioning of blasting machine IAW paragraph 2.7.8b(5) and Para 2.7.14.b(3).	Light does not work.
19	•		•	•	**M51 BLASTING CAP TEST SET**. Check for proper functioning of blasting cap test set IAW paragraph 2.7.8b(3) and para 2.7.14b(2).	Light does not work.

Table 2.5. Operator Preventive Checks and Services (Cont)

B-Before Operation **D-During Operation** **A-After Operation** **Q-Quarterly**
S-Semi-annually

Item No.	Interval				Item to be Inspected Procedure	Not Fully Mission Capable If:
	B	D	A	Q/S		
20	•		•	•	**SELECTOR SWITCH BOX (MOD 0/1) OR SELECTOR SWITCH ASSEMBLY (MOD 2/3).**	
	•		•	•	a. Check for missing/damaged parts.	
	•		•	•	b. MOD 0/1. Rotary switch operates freely.	Switch will not function mechanically.
	•		•	•	c. MOD 2/3. Check that reset button is depressed. Make sure that toggle switches operate properly and the rotary switch can be lifted and turned in its full range.	Reset button will not remain depressed. Rotary switch will not rotate. Toggle switches will not return to original position after release.
21	•		•		**ELECTRICAL CABLES**. Check cables for broken connectors or pins. Check for frayed wiring or worn areas. Make sure that all required cables are present.	Connectors or pins are broken or missing. Cables are frayed or worn to expose wires. Cables are not present.
22	•	•		•	**ELECTRICAL SYSTEM**. Perform continuity checks IAW paragraph 2.7.9 (MOD 0/1) or paragraph 2.7.14 (MOD 2/3).	Electrical system does not pass continuity checks.

Table 2.5. Operator Preventive Checks and Services (Cont)

B-Before Operation **D-During Operation** **A-After Operation** **Q-Quarterly**
S-Semi-annually

Item No.	Interval				Item to be Inspected Procedure	Not Fully Mission Capable If:
	B	D	A	Q/S		
23	•		•	•	**SLING AND TEST**. Check the bridge for cracks. Check cables for damage resulting from kinks, bends, crushed sections or fraying which cause potential weak points and hazards. Replace sling if a cable is kinked, separated from pulled out kinks, crushed or half of the wires are broken in one STRAND of cable. **NOTE** **DO NOT USE THE SLING UNLESS A LOAD TEST HAS BEEN PERFORMED WITHIN THE PAST CALENDAR YEAR. PERFORM THE ANNUAL LOAD TEST BY LIFTING 5,300 POUNDS FOR A MINIMUM OF TWO (2) MINUTES.**	Sling is unserviceable.

Section III. OPERATION UNDER USUAL CONDITIONS

2.5 GENERAL COMMENTS ABOUT USE OF MICLIC.

a. This section contains step-by-step instructions for preparing the MICLIC for operation, deploying it and moving it to new breach locations.

b. Appendix G contains an Operator's Checklist for quick reference. This checklist summarizes the detailed operating instructions in this section. Before using the checklist in Appendix G, become THOROUGHLY familiar with the step-by-step instructions in this section.

WARNING

- **NEVER ATTEMPT TO ATTACH AN ARMED FUZE INTO A LINEAR DEMOLITION CHARGE. PREMATURE DETONATION MAY RESULT.**

- **CONNECTING THE M34 BLASTING MACHINE TO THE SELECTOR SWITCH ASSEMBLY ALLOWS A PATH FOR STRAY VOLTAGE TO REACH THE ROCKET MOTOR. THE M34 SHOULD NOT BE CONNECTED TO THE SELECTOR SWITCH ASSEMBLY UNTIL REACHING THE BREECH POSITION AND THE LAUNCHER RAIL IS RAISED TO THE FIRING POSITION AND YOU ARE READY TO FIRE. THE PRIMARY OPERATOR WILL KEEP THE M34 BLASTING MACHINE UNDER CONTROL AT ALL TIMES.**

- **NEVER ATTEMPT TO BYPASS THE LAUNCHER'S SAFETY SWITCH WHEN ELECTRICALLY CONNECTING ROCKET MOTOR AND LINEAR DEMOLITION CHARGE. THIS ALLOWS AN ELECTRICAL PATH FOR PREMATURE FIRING.**

- **WHEN THE TRAILER IS TOWED BY A VEHICLE NOT EQUIPPED WITH A TRAILER BRAKE INTERCONNECTION, RESTRICT OPERATION TO NON-PUBLIC AREAS (UNDER DOT REGULATIONS) AND VEHICLE TO THE FOLLOWING SPEEDS:**

0-5 MPH----------ROUGH BROKEN TERRAIN
0-10 MPH----------FLAT ROUGH TERRAIN
0-15 MPH----------SMOOTH OFF ROAD
0-25 MPH----------SECONDARY ROADS

- **THE VEHICLE COMMANDER SHOULD CLOSELY MONITOR THE TRAILER AND ITS CONTENTS DURING SUCH TOWING.**

WARNING

- **DO NOT MAKE SHARP TURNS WHEN TOWING THE TRAILER WITH TRACKED VEHICLES. THIS CAN CAUSE THE TRAILER TO OVERTURN AND BE DAMAGED FROM CONTACT WITH THE TOWING VEHICLE'S TRACKS. THE VEHICLE COMMANDER SHOULD KEEP THE TRAILER AND ITS CONTENTS UNDER CLOSE SCRUTINY DURING SUCH TOWING.**

- **WHEN PREPARING TO DEPLOY THE MICLIC USING THE REMOTE TRAILER DISCONNECT DEVICE, DO NOT CONNECT SAFETY CHAINS, AIR HOSES, OR INTER-VEHICLE TRAILER CABLE TO TOWING VEHICLE.**

CAUTION

SAFE OPERATING TEMPERATURE RANGE FOR ROCKET MOTOR IS -40°F TO + 125°F (-4° to 52° C) SAFE STORAGE TEMPERATURE RANGE FOR ROCKET MOTOR IS -60°F TO +160°F. (-51° to 71° C).

NOTE

- **THIS IS THE GENERAL PROCEDURE FOR CHECKING THE HYDRAULIC SYSTEM WHEN IT IS UNDER PRESSURE, WHETHER LAUNCHER IS ATTACHED TO THE TRAILER OR IS ON THE GROUND. LAUNCHER/TRAILER SHOULD BE LEVEL.**

- **IF LAUNCHER FAILS TO FUNCTION THROUGH THE FOLLOWING STEPS, TROUBLESHOOT OR NOTIFY SUPPORT MAINTENANCE TO CHARGE ACCUMULATOR (ORGANIZATIONAL MAINTENANCE FOR THE MARINE CORPS; DIRECT SUPPORT MAINTENANCE FOR THE ARMY).**

- **IF RAIL RAISES IN AN ERRATIC MANNER, SEND LAUNCHER TO ORGANIZATIONAL MAINTENANCE TO BLEED THE AIR FROM HYDRAULIC SYSTEM.**

- **WHEN REMOVING OR INSERTING BALL-LOCK PINS OR DISENGAGING DETENTS (SEE FIGURE 2.18), IT MAY BE NECESSARY TO RAISE OR LOWER THE LAUNCHER RAIL SLIGHTLY. THIS IS ACHIEVED BY USING THE HAND PUMP AND/OR PUMP VALVE LEVER WHILE HYDRAULIC CONTROL VALVE LEVER IS IN MANUAL RAISE/LOWER POSITION.**

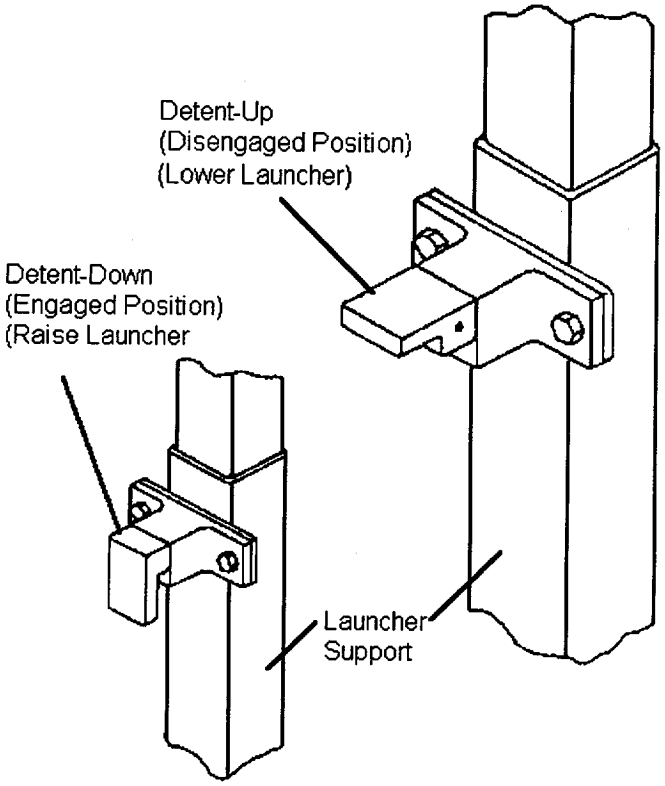

Figure 2.17. Detent Positions on Launcher Supports

2.6 INITIAL ADJUSTMENTS, CHECKS, AND SELF-TESTS

2.6.1 PRESSURE CHECK

a. Check Accumulator Charge

(1) Engage detents (1)(see Figure 2.17 and 2.18) by pulling down on levers.

(2) Ensure pump valve lever (2) is in HOLD position.

(3) Insert ball-lock pins (3) to RAISE (side) position in launcher rail supports (4) .

(4) Move hydraulic control valve lever (5) to PRESSURIZE ACCUMULATOR position.

(5) Operate pump handle (6) until pressure gage (7) indicates 2,250 psi at 79° F or lower ambient temperature. If ambient temperature is 80° F or higher, the proper operating pressure can be lower. Refer to Table 2.6.

Legend:

(1) Detents
(2) Pump Valve Lever
(3) Ball-Lock Pins
(4) Launcher Rail Supports
(5) Hydraulic Control Valve Lever
(6) Pump Handle
(7) Pressure Gage
(8) Clinometer

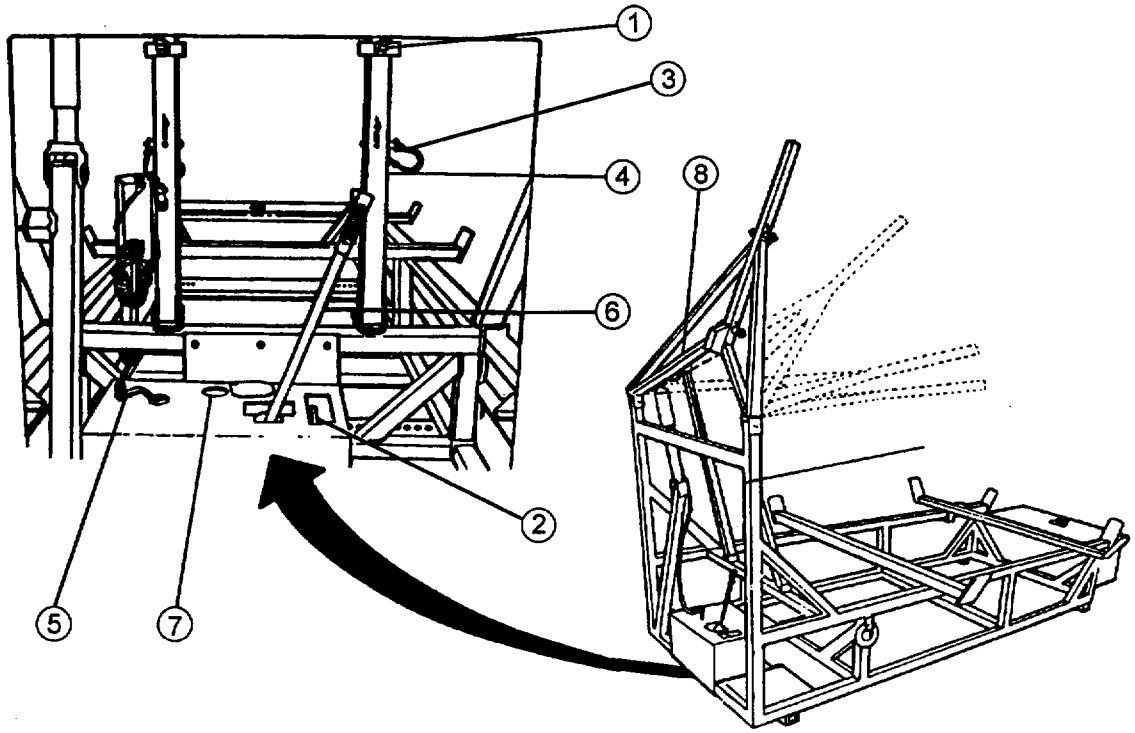

Figure 2.18. Launcher Hydraulic Pressure Checkout

Table 2.6. Proper Test Pressure at High Ambient Temperatures

Operating Location Temperature	Minimum Pressure Reading
80° (27° C)	2,205 psi
100° (37.8° C)	2,115 psi
120° (49° C)	2,045 psi

(6) If proper pressure cannot be obtained, have Direct Support charge the accumulator with nitrogen. Marine Corps should have Organizational Maintenance charge the accumulator.

(7) Move pump valve lever (2) to the RELEASE position.

(8) Toggle hydraulic valve lever (5) between REMOTE RAISE and MANUAL RAISE/LOWER positions until gage (7) reads 0 psi.

b. Detent Check

(1) Return hydraulic control valve lever (3)(See Figure 2.19) to MANUAL RAISE/LOWER position.

(2) Move pump valve lever (2) to HOLD position.

CAUTION

NEVER RAISE LAUNCHER RAIL BEYOND THE POINT WHERE THREADS START TO SHOW ON HYDRAULIC CYLINDER, ABOUT 75° ELEVATION OR THE HYDRAULIC CYLINDER MAY BE DAMAGED.

(3) Operate pump handle (4) until detents (1) engage (first click) and clinometer (6) reads about 40° angle.

(4) Continue operating pump handle slowly until launcher rail reaches a positive stop, approximately 45-47°.

NOTE

WHITE LINES SHOULD APPEAR ON LAUNCHER SUPPORTS INDICATING CORRECT LAUNCH ANGLE (ARMY ONLY).

(5) Release detents (1) by pushing up on levers .

(6) Move pump valve lever (2) slightly toward RELEASE position and slowly lower launcher rail to O°.

c. Remote Raise of Rail Check

WARNING

KEEP PERSONNEL CLEAR OF LAUNCHER RAIL WHEN OPERATING LAUNCHER AND HYDRAULICS. LAUNCHER RAIL SHOULD RAISE WHEN CONTROL VALVE IS MOVED TO THE REMOTE RAISE POSITION.

(1) Move pump valve lever (2) firmly to HOLD position.

(2) Move hydraulic control valve lever (3) to PRESSURIZE ACCUMULATOR position.

(3) Engage detents (1) by pulling down on levers.

NOTE

ALWAYS ALLOW GAGE POINTER TIME (10 TO 15 SECONDS) TO STABILIZE WHEN YOU STOP PUMPING BECAUSE PRESSURE MAY DROP 400 TO 500 PSI. PRESSURE GAGE POINTER MOVING TO A LOWER READING AFTER STABILIZATION MAY INDICATE A PRESSURE LEAK.

Legend:

(1) Detents
(2) Pump Valve Lever
(3) Hydraulic Control Valve Lever
(4) Pump Handle
(5) Pressure Gage
(6) Clinometer
(7) Ball-Lock Pins
(8) Launcher Rail Supports

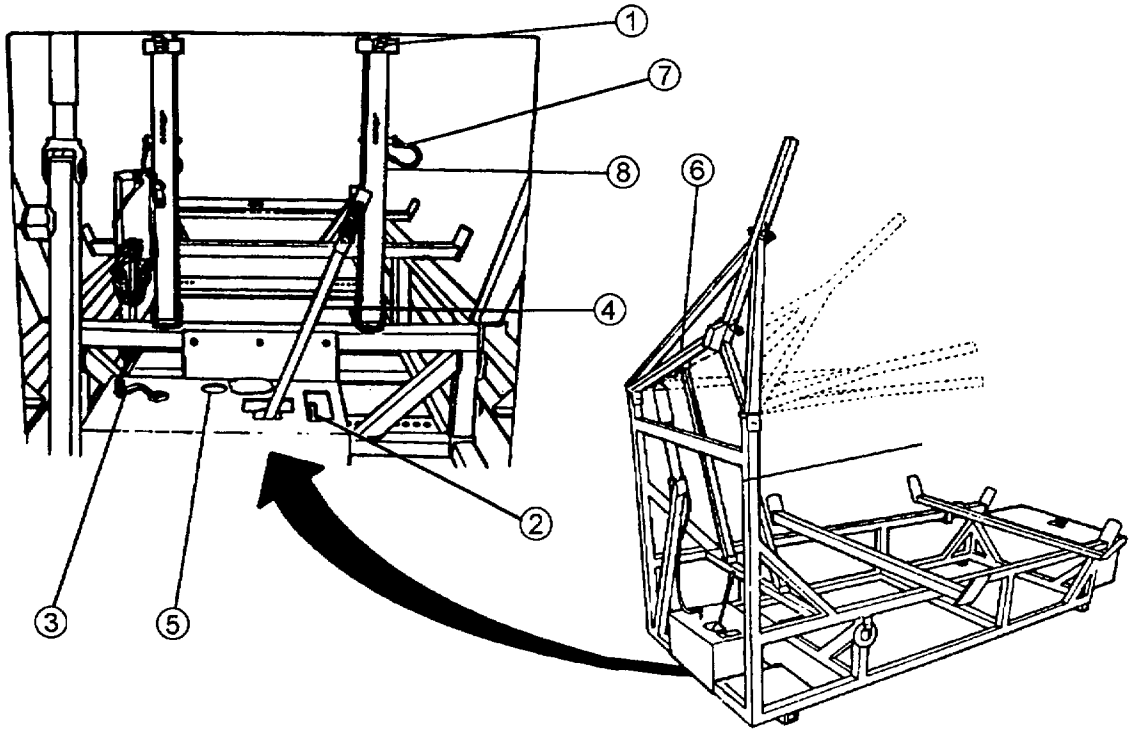

Figure 2.19. Launcher Detent Checkout

(4) Operate pump handle (4) until a reading of 3,200-3,500 psi is indicated on pressure gage (5). If gage needle drops after stabilization, the system may have a leak or pump valve handle is not fully in the HOLD position.

WARNING

KEEP PERSONNEL CLEAR OF LAUNCHER RAIL WHEN OPERATING LAUNCHER AND HYDRAULICS. LAUNCHER RAIL SHOULD RAISE WHEN CONTROL VALVE LEVER IS MOVED TO THE REMOTE RAISE POSITION.

NOTE

WHEN OPERATING THE LAUNCHER RAIL WITHOUT A ROCKET MOUNTED, AN OPERATING PRESSURE OF LESS THAN 3,000 PSI IS RECOMMENDED TO PREVENT DAMAGE TO THE LAUNCHER RAIL, LAUNCHER SUPPORTS AND BALL-LOCK PINS.

(5) Move hydraulic control valve lever (3) slowly to the REMOTE RAISE position. Launcher rail should raise to the firing position, about 45-47°.

(6) Ensure detents (1) engage, clinometer (6) reads, about 45-47° and white position marks (ARMY ONLY) on rail supports are visible from front and rear of launcher.

d. Return Launcher to Stow Configuration

(1) Return hydraulic control valve lever (3) to MANUAL RAISE/LOWER position.

(2) Release detents (1) by pushing up on levers.

(3) Move pump valve lever (2) slowly toward RELEASE position and lower launcher rail to O°.

(4) Move pump valve lever (2) to HOLD position, and pull out ball-lock pins (7) from launcher rail supports (8).

(5) Install ball-lock pins (7) into LOCK (front) position.

(6) Place detents (1) in down position.

(7) Move pump valve lever (2) to RELEASE position.

(8) Toggle hydraulic valve lever (3) between REMOTE RAISE and MANUAL RAISE/LOWER positions until gage (5) reads 0 psi.

2.7 ASSEMBLY AND PREPARATION OF MICLIC FOR USE

2.7.1 INSTALLING LAUNCHER ON TRAILER

a. Initial Setup

· **Tools**

- General Mechanics Tool Kit, Army (NSN 5180-00-177-7033) and Marine Corps (NSN 5180-00-608-3566)
- Forklift/crane capable of lifting at least 2,000 lbs (908 kg)
- Lifting sling (NSN 3940-01-218-2823)
- 15/16-inch deep well socket (NSN 5120-00-935-7452)

· **Materials/Parts**

- Flatwashers (P/N MS16212-15)
- Industrial goggles (NSN 4240-00-052-3776)
- Men's gloves (NSN 8415-00-634-4660)
- Lockwashers (P/N MS35338-145)
- Nuts (P/N MS51971-7)
- U-bolts (NSN 5306-01-226-8720)

· **General Safety Instructions**

- See following Warnings and Cautions.

· **References**

- To install launcher on AVLB, see Appendix J.

CAUTION

· **LAUNCHER SHOULD BE INSTALLED AND SECURELY FASTENED TO THE TRAILER CHASSIS BEFORE CHARGE CONTAINER IS LOADED. DO NOT ATTEMPT TO LIFT CONTAINER AND LAUNCHER TOGETHER ONTO TRAILER. ENSURE TRAILER BRAKES ARE ENGAGED.**

· **NEVER RAISE LAUNCHER RAIL BEYOND THE POINT WHERE THREADS START TO SHOW ON HYDRAULIC CYLINDER, ABOUT 75° ELEVATION OR THE HYDRAULIC CYLINDER MAY BE DAMAGED.**

NOTE

WHEN REMOVING OR INSERTING BALL-LOCK PINS OR DISENGAGING DETENTS, IT MAY BE NECESSARY TO RAISE OR LOWER THE LAUNCHER RAIL SLIGHTLY.

b. Prepare Launcher to Load onto Trailer

(1) Make sure that pump valve lever (2) is in HOLD position (see Figure 2.19) and hydraulic control valve lever (3) is in MANUAL RAISE/LOWER position.

(2) Make sure ball-lock pins (7) are removed from launcher rail supports (8) and detent (1) levers are in UP position. Leave ball-lock pins (7) hanging for this operation.

(3) Operate pump handle (4) until first thread on hydraulic cylinder appears, about 75° elevation.

(4) Replace ball-lock pins (7) in LOCK (front) position.

(5) Remove four u-bolts (1)(see Figure 2.20 and 2.21), washers and nuts from the storage container (2).

NOTE

DO NOT USE THE SLING UNLESS A LOAD TEST HAS BEEN PERFORMED WITHIN THE PAST CALENDAR YEAR. PERFORM THE ANNUAL LOAD TEST BY LIFTING 5,300 POUNDS FOR A MINIMUM OF TWO (2) MINUTES.

(6) Remove lifting sling (3) from storage container (2).

(7) Place lifting sling (3) on launcher (4) with long axis parallel to long axis of launcher.

(8) Place the four snap hooks (5) of lifting sling (3) into four lifting rings (6) on the launcher with the hook's tips facing outward.

WARNING

DO NOT ALLOW LAUNCHER TO SWAY DURING INSTALLATION TO AVOID INJURY TO PERSONNEL MARINE CORPS RECOMMENDS USE OF ROPES TO CONTROL SWAYING.

CAUTION

WHEN USING FORKLIFT, DO NOT ATTEMPT TO LOAD LAUNCHER ONTO TRAILER FROM FRONT OR REAR OF TRAILER.

NOTE

IF FORKLIFT IS USED, ADJUST FORKS TO FIT UNDER LIFTING SLING BEAM INSIDE CABLE ATTACHING POINTS. IF 5-TON WRECKER OR OTHER CRANE IS USED, SECURE WRECKER HOOK THROUGH CENTER HOLE OF LIFTING SLING BEAM.

Legend:

(1) U-Bolts
(2) Storage Container
(3) Lifting Sling
(4) Launcher
(5) Snap Hooks
(6) Lifting Rings
(7) Trailer
(8) Front Crossmember
(9) Front Weldment Feet
(10) Rear Weldment Feet
(11) Rear Crossmember

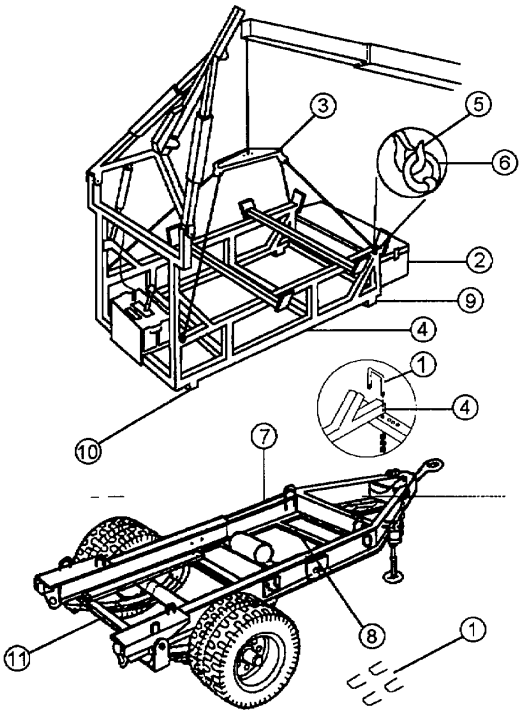

Figure 2.20. Installing Launcher on M200A1 Trailer with Crane

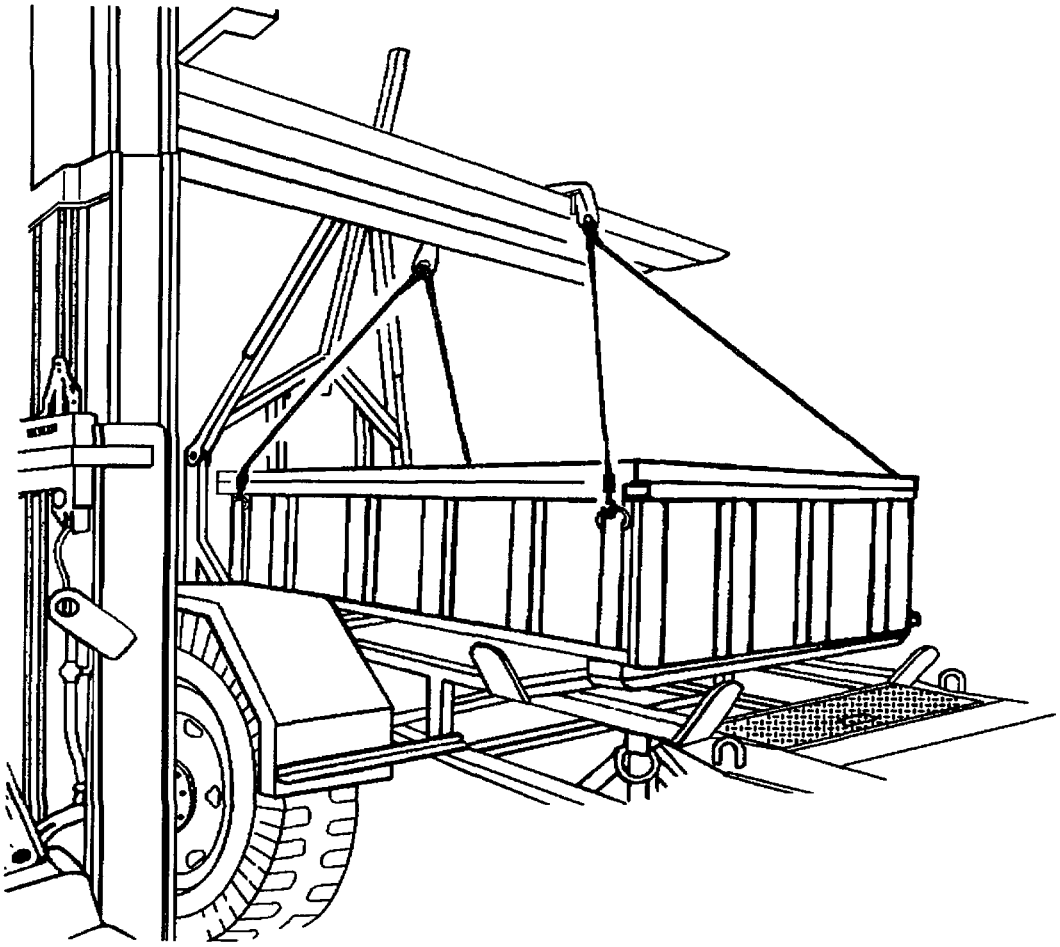

Figure 2.21. Proper Installation of Launcher on M353 Trailer with Forklift

c. Lift Launcher onto Trailer and Secure Launcher to Trailer

(1) Slowly lift launcher (4)(see Figure 2.20) and move into position over trailer (7) with storage container-end of launcher (4) toward front of trailer (7).

(2) Slowly lower launcher (4) onto trailer (7).

(3) Position launcher (4) so two front weldment feet (9) are forward of trailer's front crossmember (8) and two rear weldment feet (10) are to the rear of trailer's rear crossmember (11).

(4) Place two u-bolts (1) (see Figure 2.22) at front and two u-bolts (1) at rear where indicated by markings around bottom launcher frame (2) of launcher and push U-bolts down through holes in crossmembers.

(5) Put one flatwasher, one lockwasher, and one nut on bottom of each leg of u-bolts (1). Using 15/16-in. socket and socket wrench, tighten nuts securely.

(6) Unhook four snap hooks (3) from four lifting rings (4) and remove lifting sling (5). Return lifting sling (5) to storage container (6).

(7) Remove ball-lock pins (7). Release detents by pushing upward.

(8) Move pump valve lever (8) toward RELEASE position and slowly lower launcher rail (9) to O' reading on the clinometer.

(9) Install ball-lock pins (7) into LOCK (front) position.

NOTE

DO NOT USE THE SLING UNLESS A LOAD TEST HAS BEEN PERFORMED WITHIN THE PAST CALENDAR YEAR. PERFORM THE ANNUAL LOAD TEST BY LIFTING 5,300 POUNDS FOR A MINIMUM OF TWO (2) MINUTES.

Legend:

(1) U-bolts
(2) Launcher Frame
(3) Sling Snap Hooks
(4) Lifting Rings
(5) Lifting Sling
(6) Storage Container
(7) Ball-Lock Pins
(8) Pump Valve Lever
(9) Launcher Rail

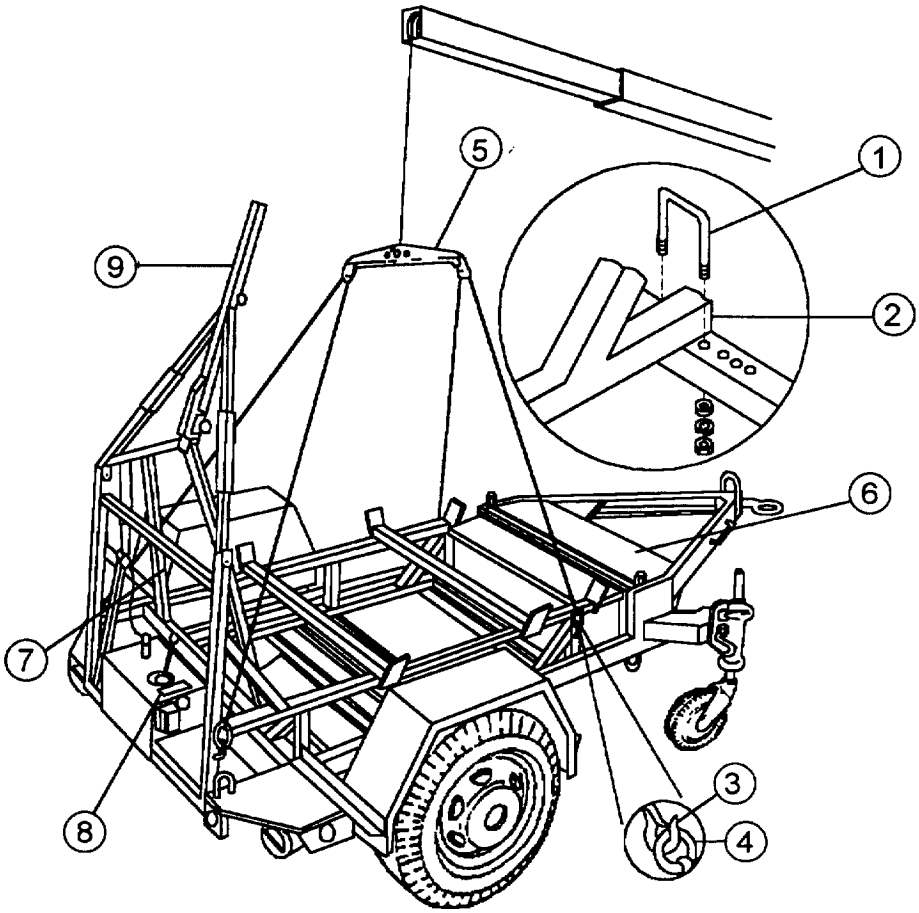

LENGTH OF WIRE NOT TO SCALE

Figure 2.22. Installing Launcher on M353 Trailer with Crane

(10) Move pump valve lever (8) to HOLD position.

(11) Insert ball-lock pins (7) into LOCK position in launcher rail supports and pull detents down.

(12) If necessary, move trailer to designated area for loading linear demolition charge container.

2.7.2. INSTALLING LINEAR DEMOLITION CHARGE CONTAINER ON LAUNCHER

NOTE

DO NOT USE THE SLING UNLESS A LOAD TEST HAS BEEN PERFORMED WITHIN THE PAST CALENDAR YEAR. PERFORM THE ANNUAL LOAD TEST BY LIFTING 5,300 POUNDS FOR A MINIMUM OF TWO (2) MINUTES.

a. Initial Setup.

· · **Tools**

- Adjustable wrenches (NSN 5120-00-423-6728)
- Band Cutter (NSN 5110-00-223-6281)
- Forklift capable of lifting at least 3,000 lbs (1362 kg)
- Shackles (NSN 4030-01-136-4535)
- Turnbuckles
- 2 long (NSN 5340-01-249-05891
- 2 short (NSN 5340-01-248-7962)

· · **Materials/Parts**

- Face Shield/industrial Goggles (Appendix E, Items 28/35)
- Men's gloves (Appendix E, Item 33)

· · **General Safety Instructions**

- See warnings and cautions at front of this manual.

· · **Personnel Required**

- Two persons to lift and remove hard cover of charge container.

WARNING

- **LOADED LINEAR DEMOLITION CHARGE CONTAINER WEIGHS APPROXIMATELY 2,850 LBS (1295 KG). MAKE SURE HANDLING EQUIPMENT IS CAPABLE OF LIFTING THAT WEIGHT TO AVOID INJURY TO PERSONNEL.**
- **DO NOT ALLOW LINEAR DEMOLITION CHARGE CONTAINER TO SWAY DURING INSTALLATION TO AVOID INJURY TO PERSONNEL.**
- **THE M58 LINEAR DEMOLITION CHARGE CONTAINS APPROXIMATELY 1,750 LBS (836.4 KG) OF HIGH EXPLOSIVES.**
- **OBSERVE WARNINGS PLACED IN FRONT OF THIS MANUAL.**
- **PERSONNEL NEAR STEEL BAND CUTTING OPERATIONS WILL WEAR GOGGLES/FACE SHIELDS. OPERATORS HANDLING THE METAL BANDING WILL ALSO WEAR LEATHER OR LEATHER-PALMED GLOVES.**

CAUTION

WHEN USING FORKLIFT, DO NOT ATTEMPT TO LOAD LINEAR DEMOLITION CHARGE CONTAINER ONTO LAUNCHER FROM FRONT OR REAR OF LAUNCHER.

NOTE

WHEN REMOVING OR INSERTING BALL-LOCK PINS OR DISENGAGING DETENTS, IT MAY BE NECESSARY TO RAISE OR LOWER THE LAUNCHER RAIL SLIGHTLY.

b. Prepare Launcher to Load the Linear Demolition Charge

(1) Remove ball-lock pins (1)(see Figure 2.23) from launcher rail supports (2) and leave ball-lock pins (1) hanging for this operation.

Legend:

(1) Ball-Lock Pins
(2) Launcher Rail Support
(3) Pump Valve Lever
(4) Hydraulic Control Valve Lever
(5) Pump Handle
(6) Detents

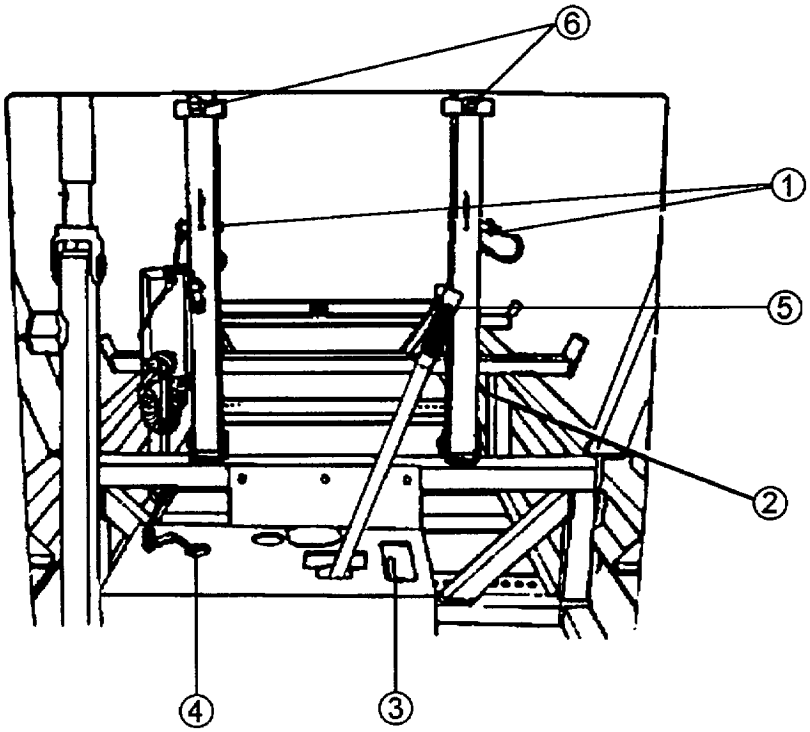

Figure 2.23. Raising Launcher Rail

(2) Move pump valve lever (3) to HOLD position and ensure that hydraulic control valve lever (4) is in MANUAL RAISE/LOWER position.

(3) Disengage detents (6) by pushing up on levers.

CAUTION

NEVER RAISE LAUNCHER RAIL BEYOND THE POINT WHERE THREADS START TO SHOW ON HYDRAULIC CYLINDER, ABOUT 75° ELEVATION OR THE HYDRAULIC CYLINDER MAY BE DAMAGED.

(4) Operate pump handle (5) to elevate rail to maximum position, about 75°.

(5) Replace ball-lock pins (1)(see Figure 2.24) in LOCK (front) position.

Legend:

(1) Ball-Lock Pin

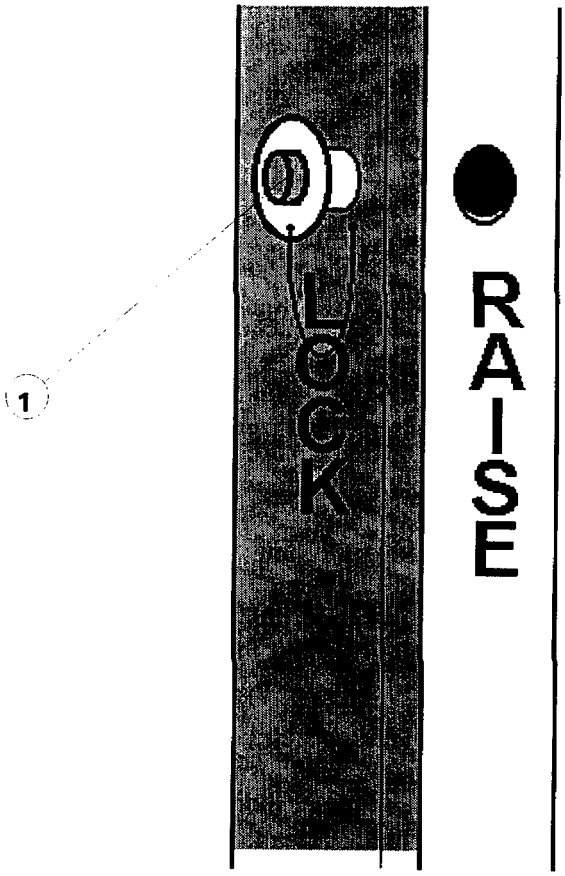

Figure 2.24. Ball-Lock Pin in Locked Position

c. Inspect Linear Demolition Charge.

(1) Inspect linear demolition charge container for obvious damage before use IAW the following Table 2.7 or 2.8. If charge is not fully mission capable, return it to the Ammunition Supply Point (ASP).

Table 2.7. Inspection of M58A3/A4 Linear Demolition Charge Container

Item to be Inspected/Procedure	Not Fully Mission Capable If:
CONTAINER EXTERIOR	
a. Check for evidence of exposure to standing water.	A water/mud line is visible on container.
b. Check for damage to container, i.e., cracks, gouges, dents.	Container is cracked, gouged, or dented to the extent that the linear demolition charge is exposed.
c. Check receptacles (1) on linear demolition charge junction box (2) for damage, corrosion, missing receptacle pins.	Damage is so severe that electrical connectors cannot be screwed on tightly, corrosion cannot be cleaned off, or receptacle pins are missing.
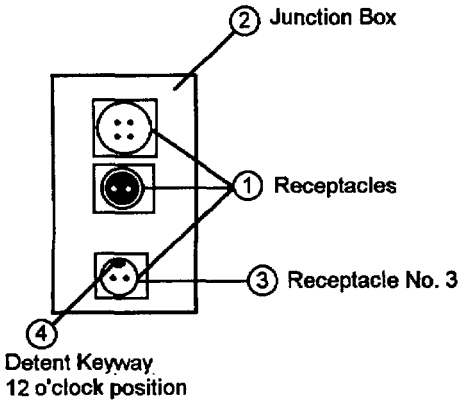	
d. Check receptacle No. 3 (3)(bottom receptacle) for correct position of keyway (4).	Keyway is not in the 12 o'clock position.

Table 2.8. Inspection of M68A2 Inert Linear Demolition Charge Container

Item to be Inspected/Procedure	Not Fully Mission Capable If:
CONTAINER EXTERIOR	
a. Check receptacles (1) on linear demolition charge junction box (2) for damage, corrosion, and missing pins.	Damage is so severe that electrical connectors cannot be screwed on tightly, corrosion cannot be cleaned off, or receptacle pins are missing.
b. Check receptacle No. 3 (3)(bottom receptacle) for correct position of the keyway (4). 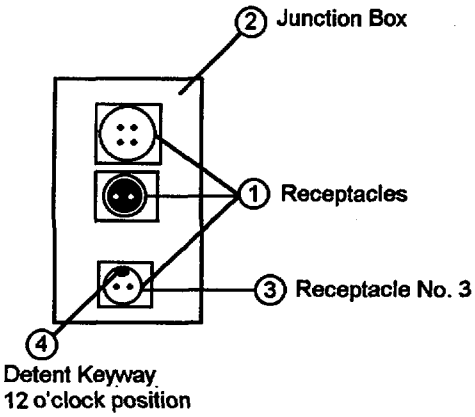	Keyway is not in the 12 o'clock position

WARNING

PERSONNEL NEAR STEEL BAND CUTTING OPERATIONS WILL WEAR GOGGLES/FACE SHIELDS. OPERATORS HANDLING THE METAL BANDING WILL ALSO WEAR LEATHER OR LEATHER-PALMED GLOVES.

(2) Cut, remove and discard steel bands.

NOTE

TWO PERSONS ARE NEEDED TO LIFT AND REMOVE THE LINEAR DEMOLITION CHARGE CONTAINERS HARD COVER.

(3) Lift and remove the linear demolition charge container's hard cover. Retain cover for reuse (M68A2) or dispose of with the empty linear demolition charge container (M58).

(4) Inspect components of linear demolition charge container IAW Table 2.9 or Table 2.10.

Table 2.9. Inspection of Components of M58A3/A4 Linear Demolition Charge Container

Item to be Inspected/Procedure	Not Fully Mission Capable If:
CONTAINER EXTERIOR	
a. Check fuze (1), packaged in center of linear demolition charge, is SAFE (2)(green S showing in Safe/Arm window). 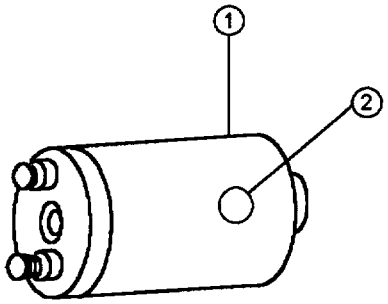	RED or ARMED showing in window. Notify EOD. Place fuze in holding area away from other explosives.
b. Check that fuze shear pin is present.	Shear pin is missing
c. Check that fuze holder is installed in the left rear corner of container as shown. 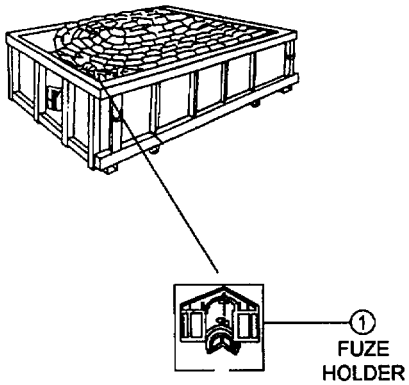	Fuze holder is missing.
d. Check if cadmium powder (white residue) is present on or near fuze holder (1). Clean IAW procedure in para 1.6.e.	

Table 2.9. Inspection of Components of M58A3/A4 Linear Demolition Charge Container (Cont)

Item to be Inspected/Procedure	Not Fully Mission Capable If:
e. Check that the arresting cable snap hook (1) is anchored to the container with the snap gate (2) facing out. Reattach snap hook so that it passes under, then over the bar. 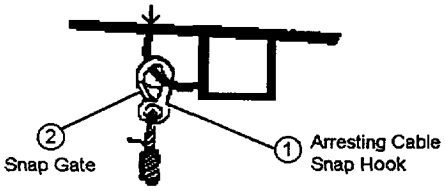 	
f. ARMY ONLY. Check that the fuze arming wire (1) is woven into the arresting cable (2) at the end of the nylon sock (3). 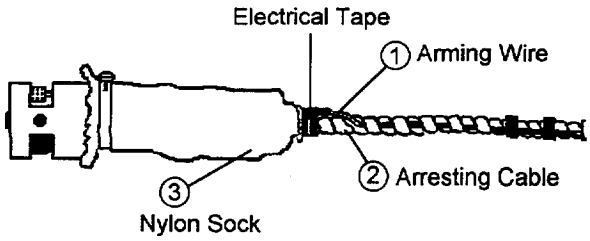 	Arming wire is fastened with a hose clamp to the arresting cable.
g. Check that linear demolition charge is not saturated with water.	Linear demolition charge is saturated with water.
h. Check electrical wires under nylon sock are not secured to arresting cable with a hose clamp.	Electrical wire secured with hose clamp. Remove hose clamp. Tape electrical wires away from arming wire using masking tape. (See Figure 2.28)
i. ARMY ONLY. Check electrical wires under nylon sock are not tangled or taped with the arming wire.	Electrical wires are tangled or taped with arming wire. Retape electrical wire using masking tape. (See Figure 2.28)

Table 2.10. Inspection of M68A2 Inert Linear Demolition Charge Container Interior

Item to be Inspected/Procedure	Not Fully Mission Capable If:
a. Check that fuze holder is installed in rear corner of container.	Fuze holder is missing.
b. Check that Cadmium powder (white residue) is present on or near fuze holder. paragraph 1.6e.	Cadmium powder is present. Clean IAW procedure in
c. Check that the arresting cable snap hook is anchored to the container. Reattach snap hook.	Arresting cable snap hook is not anchored to the container.
d. Check that fuze arming wire connector has been reset (pushed in) connector back into unarmed position.	Fuze is armed. Depress pin on arming wire connector and push
e. Check that electrical wires under nylon sock are not secured to arresting cable with a hose clamp. away from arming wire using masking tape (see Figure 2.28)	Electrical wire secured with hose clamp. Remove hose clamp. Tape electrical wires
f. ARMY ONLY. Check that electrical wires under nylon sock are not tangled or taped with the arming wire.	Electrical wires are tangled or taped with arming wire. Retape arming wire. Retape electrical wire away from arming wire using masking tape. (See Figure 2.28)

d. Prepare Linear Demolition Charge and Lift onto Launcher.

NOTE

DO NOT USE THE SLING UNLESS A LOAD TEST HAS BEEN PERFORMED WITHIN THE PAST CALENDAR YEAR. PERFORM THE ANNUAL LOAD TEST BY LIFTING 5,300 POUNDS FOR A MINIMUM OF TWO (2) MINUTES.

(1) Disconnect inter-vehicle electrical cable while loading and securing linear demolition charge container.

(2) Remove lifting sling (1)(see Figure 2.25) from storage container (2).

(3) Place lifting sling (1) on linear demolition charge container (3) with its long axis parallel to long axis of container.

(4) Hook four snap hooks (4) through four lifting rings (5) with hook's tips pointed outward.

NOTE

IF FORKLIFT IS USED, ADJUST FORKS TO FIT UNDER LIFTING SLING BEAM INSIDE CABLE ATTACHING POINTS. IF A 5-TON WRECKER OR OTHER CRANE IS USED, SECURE CRANE HOOK THROUGH CENTER HOLE OF LIFTING SLING BEAM.

(5) Slowly lift linear demolition charge container (3) with painted arrow on container pointing forward and junction box on linear demolition charge container to the rear of trailer.

Legend:

(1) Lifting Sling
(2) Storage Container
(3) Charge Container
(4) Snap-Hooks
(5) Lifting Rings
(6) Launcher
(7) Container Guide Bars (Feet)
(8) Launcher Crossmembers

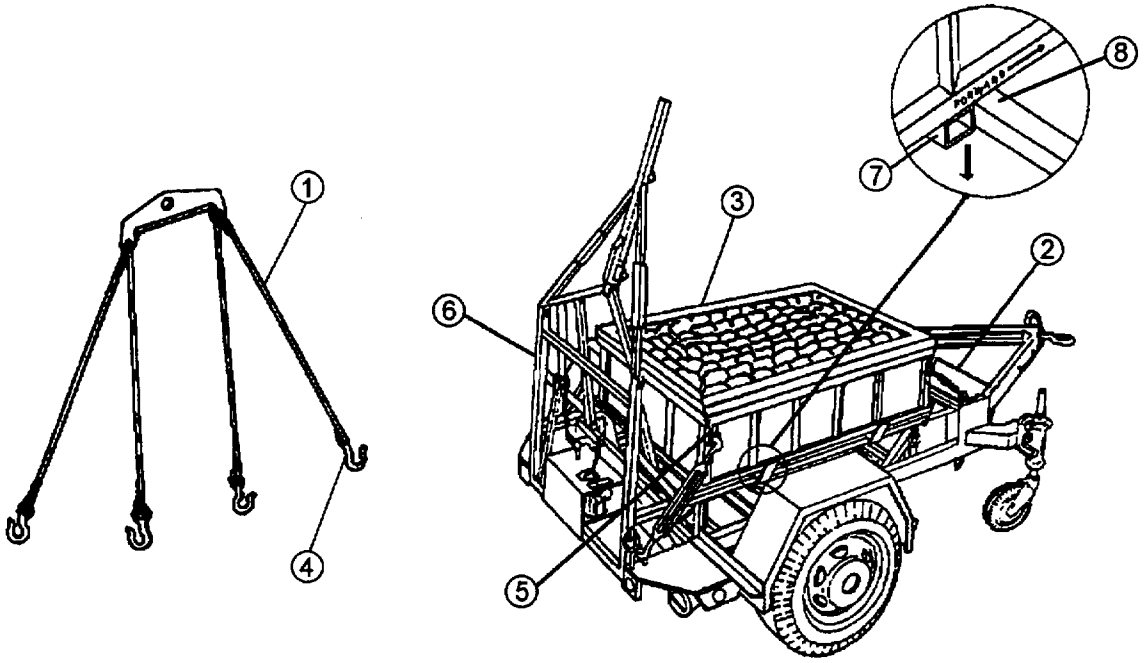

Figure 2.25. Loading Linear Charge Container onto Launcher

NOTE

- **ENSURE THAT LINEAR DEMOLITION CHARGE CONTAINER IS CENTERED OVER THE LAUNCHER BEFORE LOWERING CONTAINER.**
- **LOCATE CONTAINER AS FAR FORWARD AS POSSIBLE. FORWARD CONTAINER BAR GUIDE SHOULD BE RESTING AGAINST FORWARD CROSSMEMBER OF LAUNCHER.**

(6) Slowly lower linear demolition charge container (3) onto launcher (6). The bar-guides (7) on the bottom of the charge container must rest between cross-members (8) of launcher. Container should be located as far forward on launcher as possible. Forward container bar guide must rest against forward cross-member of launcher.

(7) Remove lifting sling {1) and return lifting sling to storage container (2).

CAUTION

DO NOT USE LAUNCHER'S LIFTING RINGS TO SECURE THE LINEAR DEMOLITION CHARGE TO THE LAUNCHER. CHARGE MUST BE SECURED DIRECTLY TO THE TRAILER.

(8) Remove turnbuckles (1) and (6)(see Figure 2.26) from storage container.

(9) Place two long turnbuckles (1) into lifting rings (2) at rear of linear demolition charge container (3) and lifting hooks (4) at rear of the M353 trailer (5). Connect the long turnbuckles (1) to short chassis extensions with eyes (holes) on rear of M200A2/A3 trailer.

(10) Place two short turnbuckles (6) into lifting rings (7) at front of linear demolition charge container (3) and lifting hooks (8) at front of M353 trailer (5). Short turnbuckles connect to shackles which are mounted into front lifting rings of M200A2/A3 trailer.

(11) Tighten and secure front turnbuckles first. Hooks must face away from container. Ensure container is as far forward as possible. Repeat same procedure for rear turnbuckles. Ensure container remains as for forward as possible.

(12) Use adjustable wrench to tighten locknuts (9).

Legend:

(1) Long Turnbuckle
(2) Lifting Rings, Rear
(3) Charge Container
(4) Lifting Hook, Rear
(5) Trailer
(6) Short Turnbuckle
(7) Lifting Rings, Front
(8) Lifting Hooks, Front
(9) Turnbuckle Locknuts

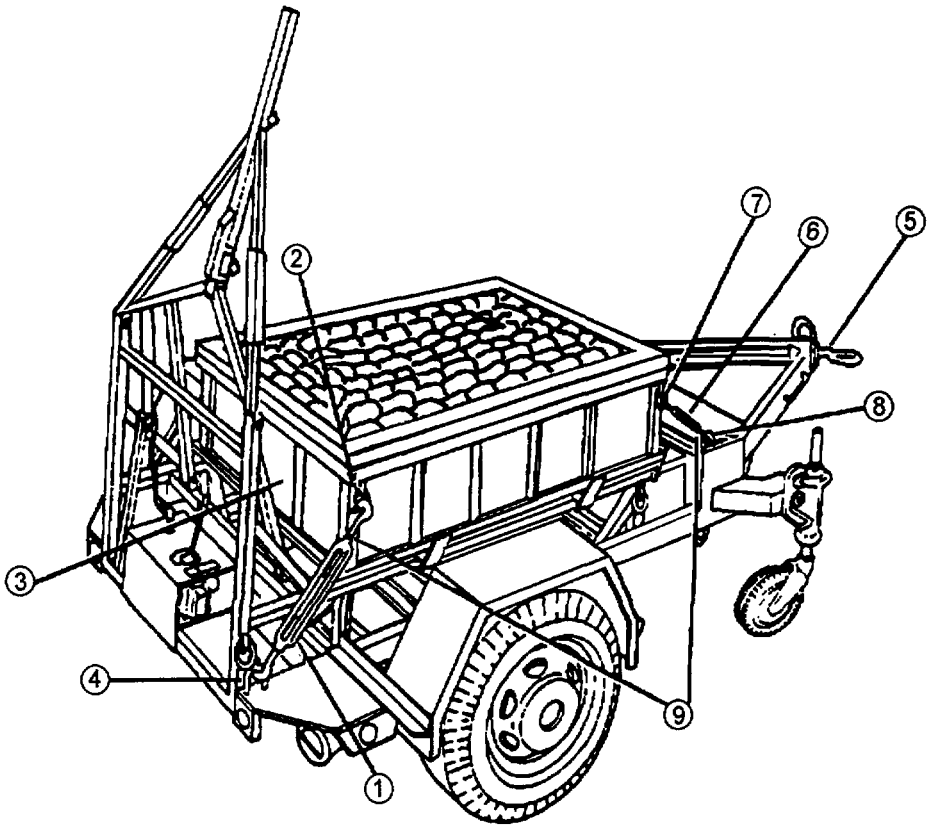

Figure 2.26. Securing Linear Charge Container to Launcher/Trailer

2.7.3 INSTALLING FUZE ON LINEAR DEMOLITION CHARGE

a. Initial Setup

· **Materials/Parts**

- 3/4-inch masking tape(NSN 7510-00-198-5831)
- Electrical tape (NSN 5970-00-686-9153)

· **General Safety Instructions**

- See cautions and warnings at front of this manual.

NOTE

- **BUNGEE STRAPS PACKED IN LINE CHARGE ARE FOR USE IN SECURING THE HARD COVER AND TO HOLD DOWN THE ROCKET MOTOR DURING TRANSPORT.**

- **SPARE PARTS KIT IS TAPED TO LEFT-REAR INSIDE WALL OF LINEAR CHARGE CONTAINER.**

Legend:

(1) Fuze
(2) Linear Charge
(2) Linear Charge
(3) Storage Cont-n-
(4) Protective Cap
(5) Fuze's Electrical Receptacle
(6) Charge's Electrical Lead
(7) Arresting Cable Fuze Connector, Rear Half
(8) Charge Fuze Connector, Front Half

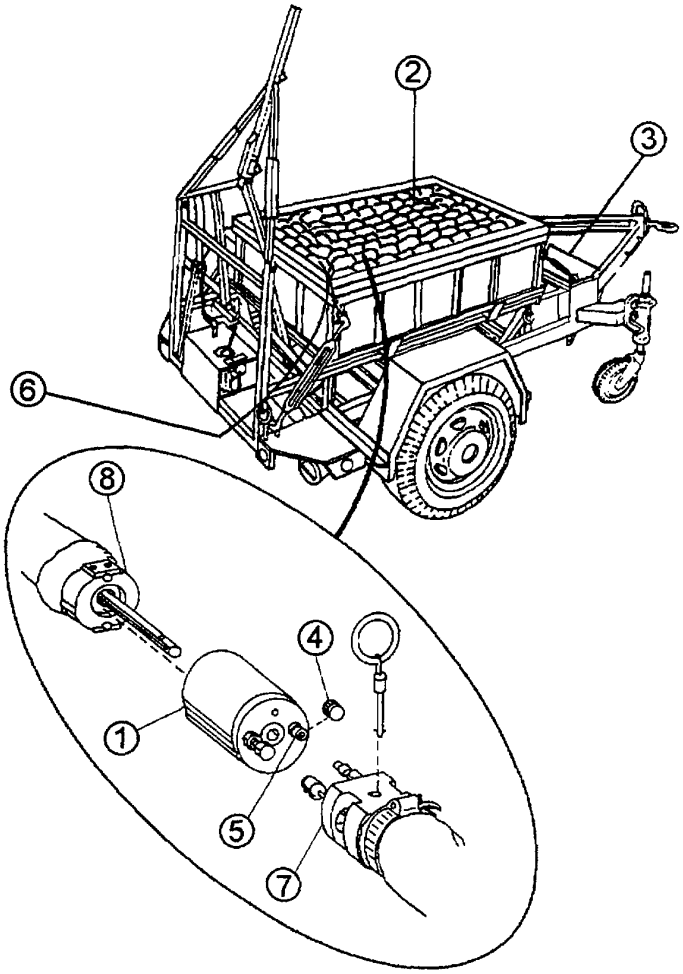

Figure 2.27. Fuze and Linear Charge Connections

WARNING

- **NEVER ALLOW THE FRONT END OF A FUZE TO BE POINTED TOWARD PERSONNEL.**
- **KEEP HANDS AWAY FROM FRONT END OF A CONNECTED FUZE TO AVOID INJURY TO PERSONNEL.**

b. Prepare Linear Demolition Charge for Use

(1) Remove packaged fuze (1) from center of linear charge (2)(see Figure 2.27). Remove and retain shorting plug from spare parts kit for use in electrical check-out, para 2.7.9b(2) and para 2.7.15c(3). Remove packaged bungee straps from center of linear charge (2) and place in storage container (3).

(2) Remove and retain protective cap (4) from the fuze's electrical receptacle (5). Place in storage container (3). Drape linear charge's electrical cable (6) over rear of container where it will not become entangled with charge.

WARNING

DO NOT PULL ON ARRESTING CABLE. PULLING COULD BREAK SHORTING LOOP.

(3) Using two personnel, fold back successive layers of linear demolition charge (2) to gain access to arresting cable's fuze connector (7) and linear demolition charge fuze connector (8). If present, remove plastic shipping bracket and retaining pin from fuze holder. Be sure to pull the first layer back as far as possible so each successive layer can be pulled back out of the way.

(4) Place arresting cable's fuze connector (7) on linear demolition charge (2).

(5) **ARMY ONLY.** Check separation of arming wire and electrical wire on arresting cable. Steps (a) through (e) are only to be used by Army personnel.

(a) Pick up and hold arresting cable's fuze connector (7).

(b) Open hose clamp.

(c) Visually verify electrical lead is taped (with masking tape) to arresting cable and not tangled with arming wire. If lead is not taped, shorten thick black wire, folding back toward fuze connector, and tape in three places using 3/4" masking tape only (see Figure 2.28).

(d) Reposition sleeve, secure hose clamp.

(e) Slide hand down outside of sleeve to verify the separation of arming wire and electrical lead under sleeve.

1 Insure electrical wire is not under or tangles with arming wire cable.

2 Use masking tape only to secure electrical wires to arresting cable.

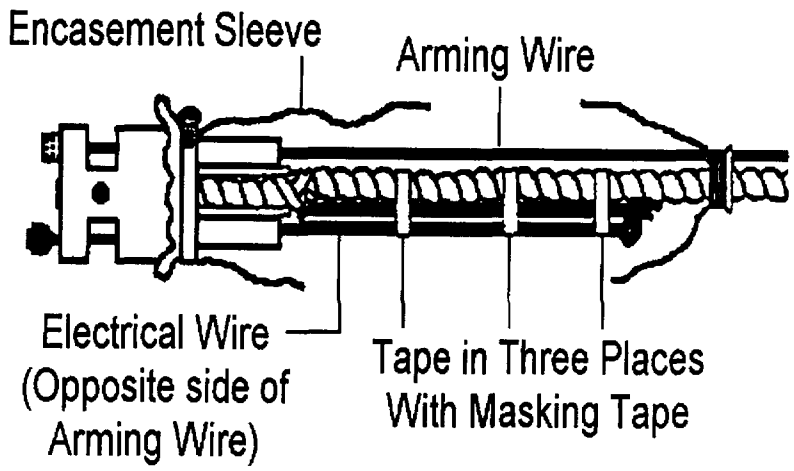

Figure 2.28. Position of Arming Wire and Electrical Cable for Taping

(6) Ensure proper fit of fuze by sliding it on shaft of linear charge fuze connector and meshing the slots in connector with those in fuze. Remove fuze from shaft and set down in a safe area with detonator-end pointing away from personnel and line charge.

(7) Screw on and tighten electrical connector (1)(see Figure 2.29) to the fuze's electrical receptacle (2).

NOTE

IF ARMING WIRE HAS NOT BEEN SPLICED INTO ARRESTING CABLE, HOSE CLAMPS WILL BE PRESENT, CHECK TIGHTNESS OF HOSE CLAMPS. (MARINE CORPS ONLY)

(8) Screw on and tighten arming wire's knurled nut (3) to arming pin assembly (4). When necessary, pull arming wire and knurled nut (3) from rear to help seat fuze (5) into arresting cable fuze connector 16). If difficulty is encountered in meshing pins and slots, carefully separate the connectors and cables, visually align the pins and slots, and push the connectors together.

Legend:

(1) Electrical Connector
(2) Electrical Receptacle
(3) Arming Wire and Knurled Nut
(4) Arming Pin Assembly
(5) Fuze
(6) Arresting Cable Fuze Connector, Rear Half

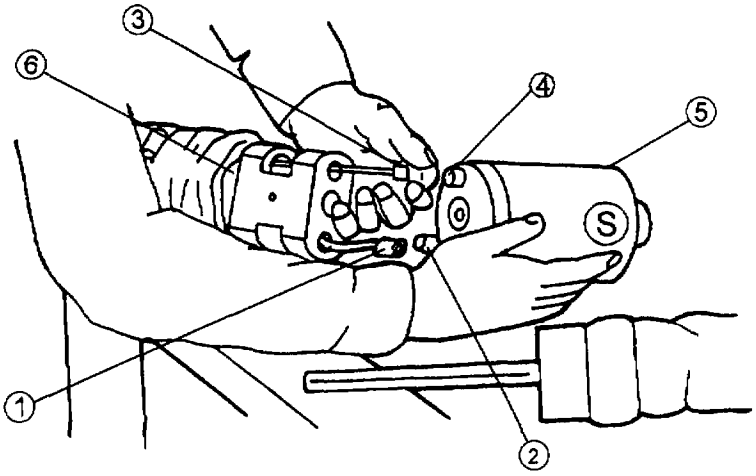

Figure 2.29. Installation of Fuze

(9) Remove quick-release pin (1)(see Figure 2.30) from arresting cable fuze connector (2) by simultaneously depressing release button and pulling out on pull ring (3).

Legend:

(1) Quick Release Pin
(2) Arresting Cable Fuze Connector, Rear Half
(3) Pull Ring
(4) Fuze
(5) Linear Charge Fuze Connector, Front Half

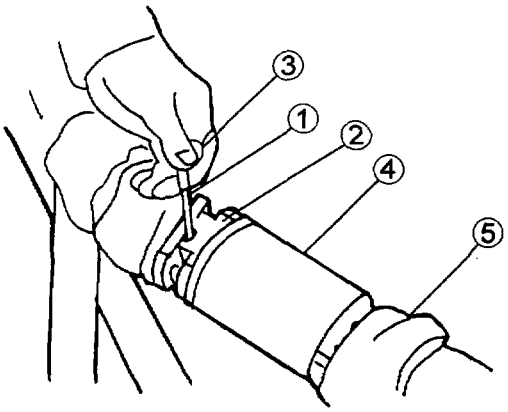

Figure 2.30. Pin Fuze Connectors in Place

(10) The following parts should mate:

(a) Mate fuze (1)(see Figure 2.31) into arresting cable fuze connector (2) and slide charge fuze connector shaft (3) into center hole of fuze (1).

(b) Mate linear charge fuze connector pins with slots in fuze (1).

(c) Mate slots of linear charge fuze connector shaft (3) with arresting cable fuze connector key.

Legend:

(1) Fuze
(2) Arresting Cable Fuze Connector, Rear Half
(3) Charge Fuze Connector Shaft, Front Half

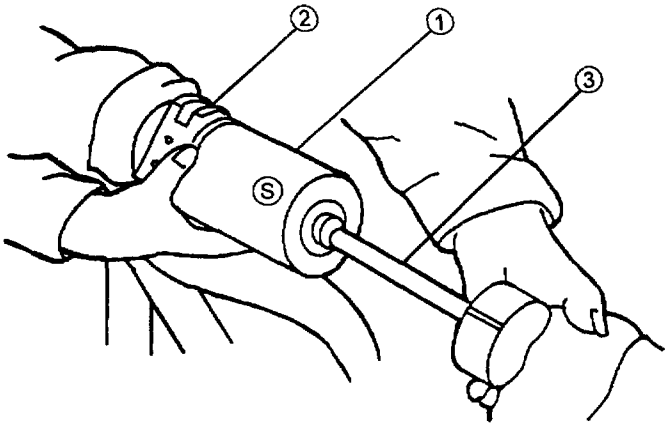

Figure 2.31. Mating Fuze Connector Parts

NOTE

MAKE SURE THE FUZE WAS NOT TURNED DURING MESHING OF PINS TO THE SLOT TO AVOID ENTANGLEMENT OF THE ARMING WIRE AROUND THE ARRESTING CABLE AND ELECTRICAL CONNECTOR WIRES.

(11) Insert quick release pin (1)(see Figure 2.30) into arresting cable fuze connector (2) until it seats in linear charge fuze connector shaft hole.

(12) Depress button on quick-release pin (1) to allow it to be inserted into guide holes. Release of the button, locks pin in place.

(13) Test the connection of the arresting cable fuze connector (1)(see Figure 2.32) and the linear charge fuze connector (2) by pulling connectors in opposite directions.

Legend:

(1) Arresting Cable Fuze Connector
(2) Linear Charge Fuze Connector

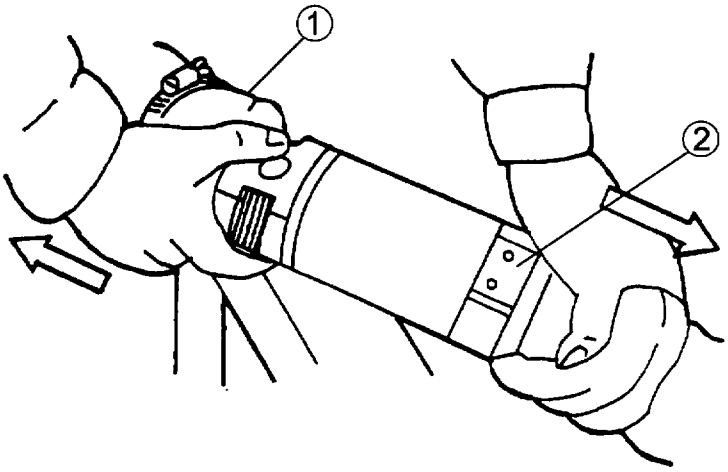

Figure 2.32. Checking Fuze Connector Joint

NOTE

IF FOR SOME REASON THE FUZE CANNOT BE ASSEMBLED IN THE ARRESTING CABLE AND LINEAR CHARGE CONNECTORS, I.E. AND THE QUICK-RELEASE PIN CANNOT BE INSERTED, THEN REFER TO TROUBLESHOOTING PROCEDURES IN (CHAPTER 3).

(14) This step is for MARINE CORPS ONLY. If arming wire has not been spliced into arresting cable, hose clamps will be present. Check tightness of hose clamps.

(15) Place connected fuze into fuze holder (1) in rear-corner of container (see Figure 2.33). Repack linear charge into proper position. After installing the fuze in the fuze-holder, check the wires under the nylon sleeve to ensure wires are not entangled with arming wire.

CAUTION

ENSURE THAT THE ASSEMBLED FUZE CONNECTOR IS FULLY INSERTED INTO THE LINEAR DEMOLITION CHARGE FUZE HOLDER.

Legend:

(1) Fuze Holder
(2) Arresting Cable End
(3) Charge End

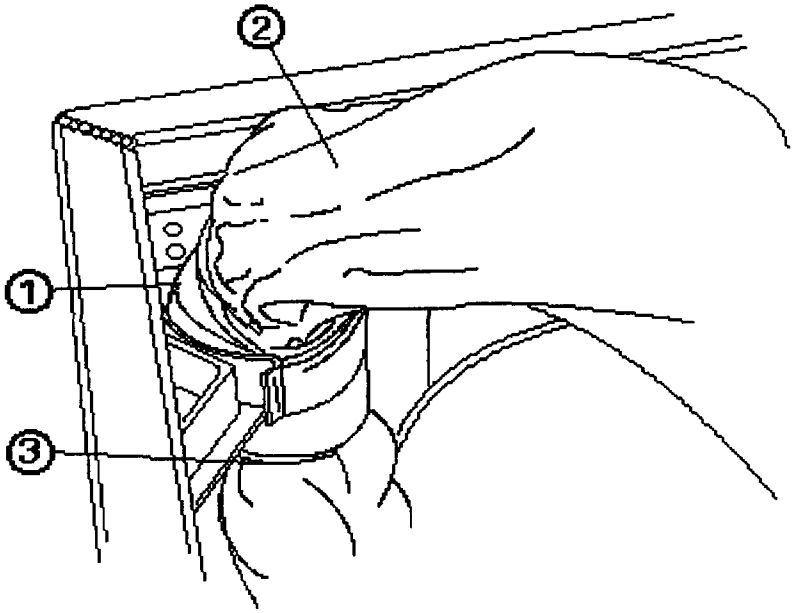

Figure 2.33. Proper Position of Fuze in Holder

CAUTION

THE ARRESTING CABLE SHOULD NOT CROSS OVER THE CHARGE OR MALFUNCTION MAY OCCUR.

(16) Ensure arresting cable remains in original packing configuration. The arresting cable follows down the back wall, across the bottom, below the fuze holder (behind the charge). The arresting cable should not lay on or cross over the linear demolition charge.

(17) Do not tuck excess arresting cable (1)(see Figure 2.34) down into container. Drape excess over back of container.

Legend:

(1) Excess Arresting Cable
(2) Line Charge Container

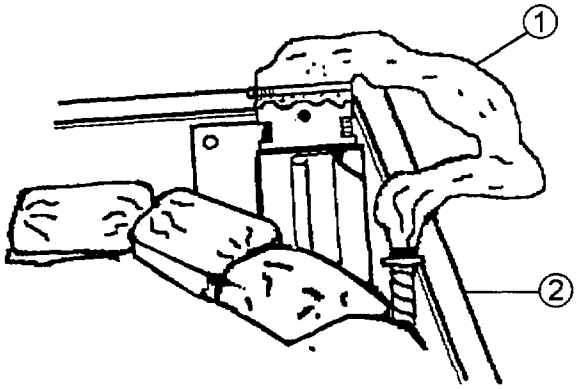

Figure 2.34. Positioning of Arresting Cable and Nylon Sock

2.7.4 INSTALLING NYLON COVER ON LINEAR CHARGE

a. Remove protective nylon cover (1) from launcher's storage container (2) (see Figure 2.35).

NOTE

NYLON COVER MAY BE LARGER THAN NECESSARY TO FIT LINE CHARGE CONTAINER. SECURE OVERHANG TO THE FRONT WITH SHOCK CORDS AS NECESSARY. EARLIER PRODUCTION OF LINEAR DEMOLITION LINE CHARGE CONTAINERS WERE LARGER THAN M58A3 AND M58A4 VERSIONS

b. Position nylon cover's (1) wear pad at rear center of linear demolition charge container (3). Position excess length of cover to overhang the front of container.

c. Attach front and rear shock cords of protective nylon cover (1) to linear demolition charge container (3) leaving flaps open. Do not attach the shock cords on the sides until protective nylon cover is closed.

Legend:

(1) Nylon Cover
(2) Storage Container
(3) Charge Container

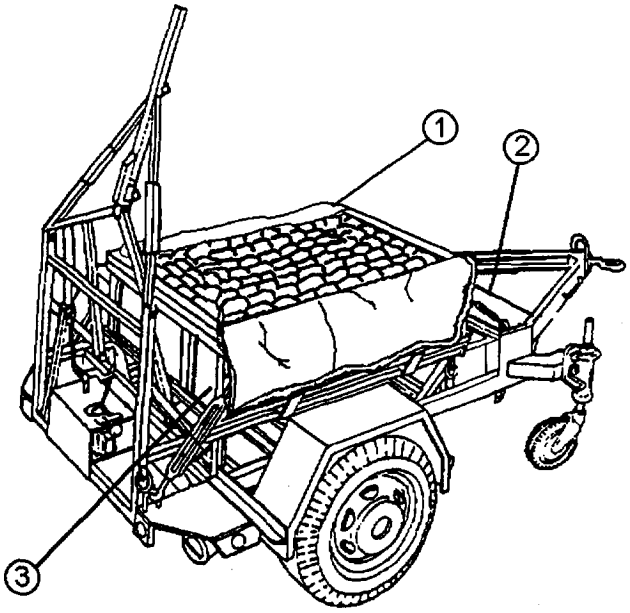

Figure 2.35. Installation of Protective Nylon Cover

2.7.5 UNPACKING AND INSPECTION OF ROCKET MOTOR

a. Initial Setup

· **Tools**

- Band cutters (NSN 5110-00-223-6281)

· **Materials/Parts**

- industrial goggles/Face Shield (NSN 4240-00-052-3776)
- Men's gloves (NSN 8415-00-634-4660)

· **References**

- TM 9-1300-206.

· **Personnel Requirements**

- Three personnel are required for some of the following tasks.

· **General Safety Instructions**

- See following Warnings and Notes.

WARNING

KEEP LINEAR DEMOLITION CHARGE M1134 SERIES FUZE AND ROCKET MOTOR AWAY FROM SOURCES OF RADIO FREQUENCY (RF) ENERGY SUCH AS RADIO OR RADAR TRANSMITTERS. ALTHOUGH THE ELECTRO-EXPLOSIVE DEVICES IN THE FUZE AND MOTOR ARE BOTH WELL PROTECTED FROM RF ENERGY INITIATION, THERE IS NO ABSOLUTE PROTECTION. KEEP AT LEAST 5 FEET (1.52 M) BETWEEN A LOW POWER OPERATING TRANSMITTER (SUCH AS A WALKIE-TALKIE) AND THESE ITEMS. THE STANDARD RADIOS USED IN EXPECTED TOWING VEHICLES WILL PRESENT NO PROBLEMS AT THE DISTANCES THEY WILL NORMALLY BE FROM THE FUZE AND ROCKET MOTOR. FOR SAFE DISTANCES FROM HIGHER POWERED TRANSMITTERS, REFER TO TM 9-1300-206.

NOTE

WHEN REMOVING OR INSERTING BALL-LOCK PINS OR RELEASING DETENTS, IT MAY BE NECESSARY TO RAISE OR LOWER THE LAUNCHER RAIL SLIGHTLY

b. Prepare Launcher for Rocket Installation

(1) Release detents (1)(see Figure 2.36) by pushing up on levers.

(2) Remove ball-lock pins (2).

(3) Ensure that hydraulic control valve lever (6) is in MANUAL RAISE/LOWER position and move pump valve lever (3) slightly toward RELEASE position; slowly lower launcher rail until approximately 10° (assuming launcher is level) is indicated on clinometer (4) then move pump valve lever (3) to the HOLD position.

(4) Engage detents (1) by pulling down on levers.

(5) Install ball-lock pins (2) into LOCK (front) position in launcher rail supports (5).

Legend:

(1) Detents
(2) Ball-lock Pins
(3) Pump Valve Lever
(4) Clinometer
(5) Launcher Rail Support
(6) Hydraulic Control Valve Lever

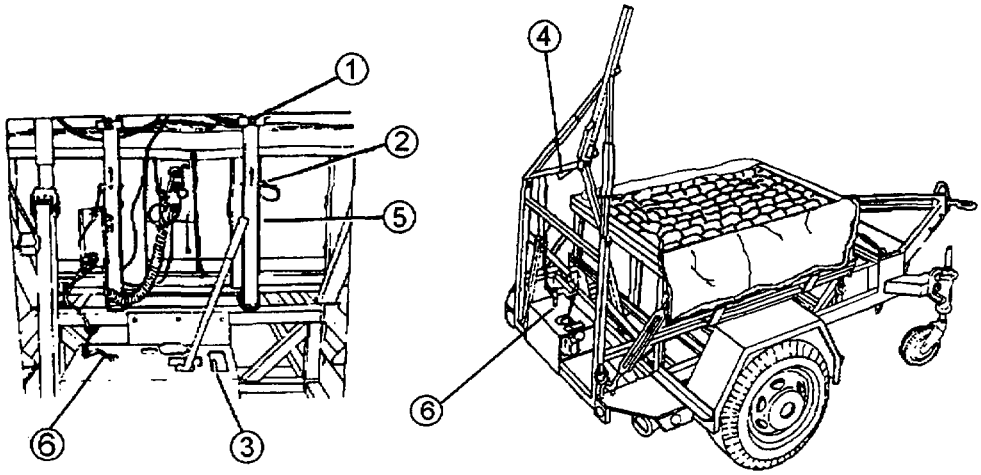

Figure 2.36. Raise Launcher Rail for Rocket Installation

c. Unpacking Rocket Motor

WARNING

PERSONNEL NEAR STEEL BAND CUTTING OPERATIONS WILL WEAR GOGGLES/FACE SHIELD. OPERATORS HANDLING METAL BANDING WILL ALSO WEAR LEATHER OR LEATHER-PALMED GLOVES.

(1) Cut and remove banding (1)(see Figure 2.37) from rocket shipping container (2).

(2) Remove lid (3) and lay aside.

CAUTION

- **LIFT ROCKET MOTOR BY TUBE ONLY. DO NOT USE BRIDLE CABLES (MOD 3) TO LIFT OR HANDLE ROCKET MOTOR. THE BRIDLE CABLES ARE PRE-TENSIONED DURING MANUFACTURING FOR PROPER FLIGHT CHARACTERISTICS.**

- **DO NOT PULL ON ROCKET MOTOR'S ELECTRICAL LEAD.**

(3) Remove barrier bag (4) from around the rocket motor.

WARNING

- **THE MK 22 MOD 3/4 ROCKET MOTORS ARE LIVE AMMUNITION. TREAT THEM AS SUCH. FOR PROCEDURES IN HANDLING LIVE AMMUNITION, REFER TO TM 9-1300-206.**

- **IF ROCKET MOTOR IS DROPPED MORE THAN 24 INCHES, IT SHOULD NOT BE FIRED. A CRACKED ROCKET MOTOR GRAIN CAN CAUSE INCREASED INTERNAL PRESSURE AND BURSTING OF THE MOTOR CASE.**

(4) Use three personnel to remove rocket motor (5) from rocket shipping container (2). Rest rocket motor cross-wise on rocket motor container for inspection.

(5) Save rocket motor packing (6) to cushion rocket motor during transportation.

Legend:

(1) Banding
(2) Shipping Container
(3) Lid
(4) Barrier Bag
(5) Rocket Motor
(6) Rocket Motor Packing

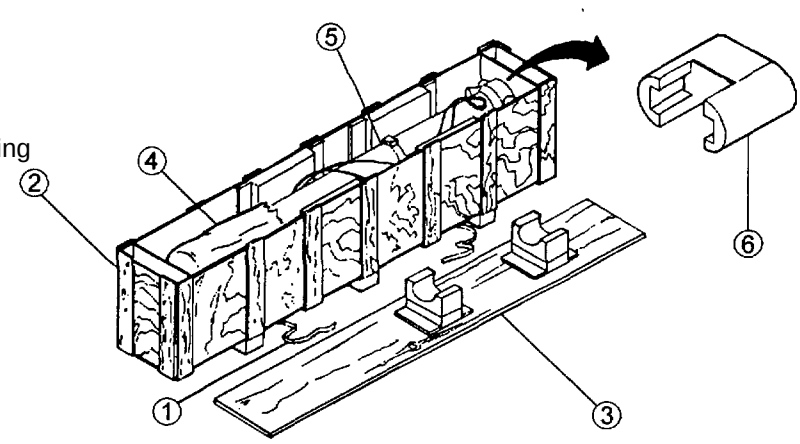

Figure 2.37. Unpacking Rocket Motor

d. Inspection of Rocket Motor

CAUTION

- **DO NOT TIGHTEN NYLON SCREWS ON FRONT PLATE OF ROCKET MOTOR (MK22 MOD 4 ROCKET MOTOR ONLY).**

- **DO NOT REMOVE NYLON TIE ON ROCKET MOTOR'S ELECTRICAL LEAD ASSEMBLY.**

(1) Inspect rocket motor for obvious damage/defects before use. Inspect MK 22 MOD 3 IAW Table 2.11 (see Figure 2.38) and inspect MK 22 MOD 4 IAW Table 2.12 (see Figure 2.39).

Table 2.11. MK 22 MOD 3 Rocket Motor Inspection

Item No.	Item to-be Inspected/Procedure	Not Fully Mission Capable if:
1	**RETAINER SCREW**	
	a. Check that the retainer screw (1) is contained in the rocket motor package (see Figure 2.38).	Retainer screw is missing. Return to Ammunition Supply Point (ASP).
	b. Check that the retainer screw is not screwed into the thrust neutralization plug (2). Remove retainer screw.	
2	**ELECTRICAL LEAD**. Check that electrical lead (3) is not damaged, i.e., cut, smashed, or crimped. Check that insulation sleeving on lead is not torn, cut, or frayed to the extent that conductor wire is visible.	Electrical lead is damaged. Return to ASP.
3	**BUTTON LUG BANDS.**	
	a. Check that the button lug band (4) is present.	Button lug band is missing. Return to ASP.
	b. Check that button lug bands (4) are not corroded.	Corrosion cannot be cleaned and it interferes with installing rocket motor on launch rail. Return to ASP.
4	**CABLE ASSEMBLY**. Check that slack in cable assembly is approximately the same on both sides of rocket motor (see Figure 2.38).	Slack is noticeably different (1.5 inches or greater) on one side compared to the other side. Return to ASP.
5	**EXTERIOR ROCKET MOTOR BODY**. Check rocket motor body for dents and cracks.	If dent is greater than 1/8" or crack is visible. Reject and return to ASP.

Legend:

(1) Retainer Screw
(2) Thrust Neutralization Plug
(3) Electrical Lead
(4) Button Lug Band

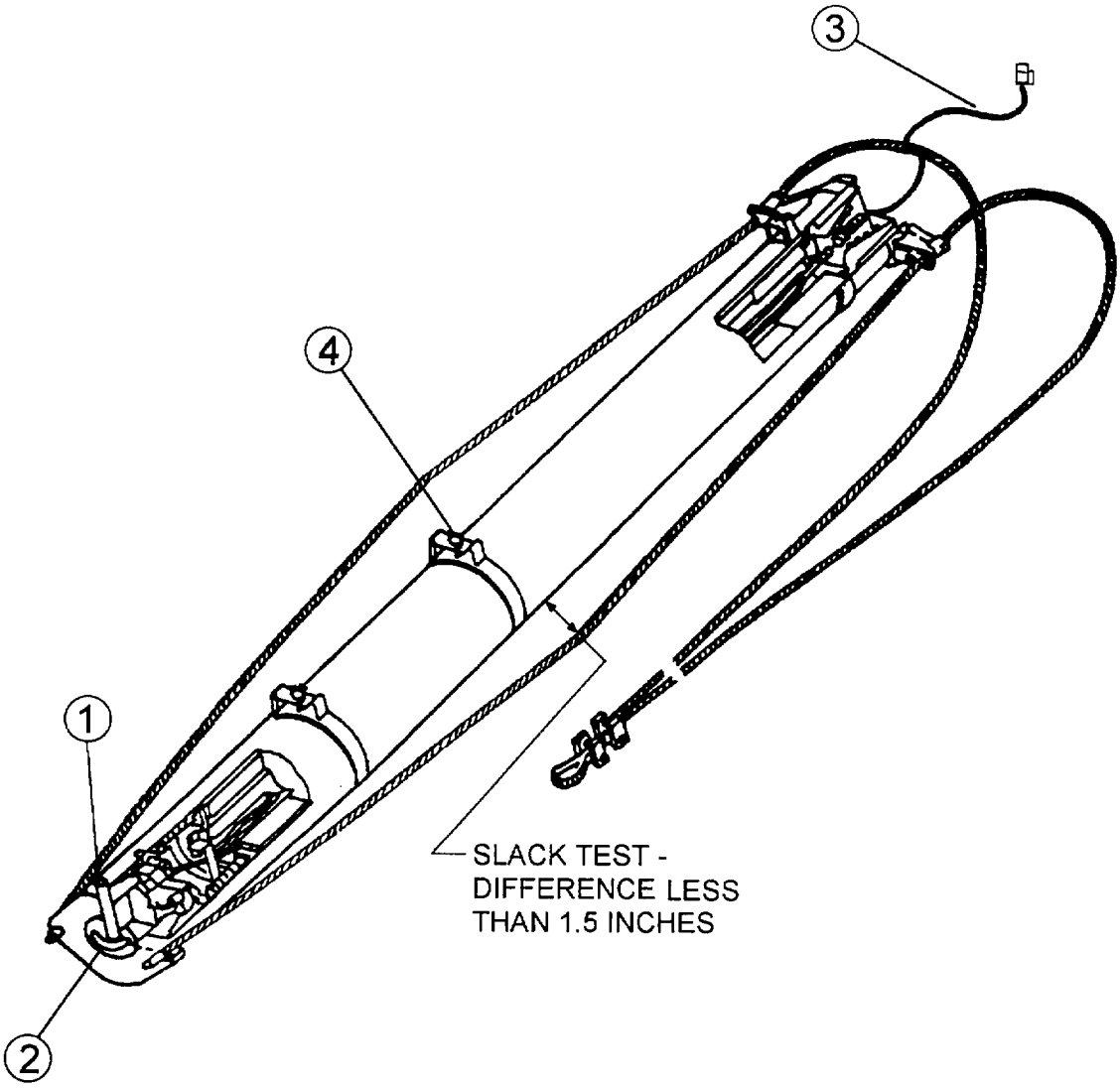

Figure 2.38. MK 22 MOD 3 Rocket Motor Components

Table 2.12. MK 22 MOD 4 Rocket Motor Inspection

Item No.	Item to-be Inspected/Procedure	Not Fully Mission Capable if:
1	**QUICK RELEASE PIN.**	
	a. Check that quick release pin (1) is attached to head cap (2)(see Figure 2.39).	Quick release pin is missing. Return to ASP.
	b. Check that quick release pin (1) is NOT inserted into thrust neutralization plug (3). Remove quick release pin from plug.	
2	**ELECTRICAL LEAD**. Check that electrical lead (4) is not damaged, i.e., cut, smashed, or crimped. Check that insulation deeving on lead is not torn, cut, or frayed to the extent that conductor wire is visible.	Electrical lead is damaged. Return to ASP.
3	**BUTTON LUG BANDS.**	
	a. Check that two button lug bands (5) are present.	Button lug bands are missing. Return to ASP.
	b. Check that button lug bands are not corroded.	Corrosion cannot be cleaned and it interferes with installing rocket motor on launch rail. Return to ASP.
4	**THRUST NEUTRALIZATION PLUG**. Check that plug is secured to rocket motor with 4 nylon screws. **NOTE** **SCREWS MAY BE LOOSE. DO NOT ATTEMPT TO TIGHTEN THEM.**	One or more screws are missing. Return to ASP.
5	**EXTERIOR ROCKET MOTOR BODY**. Check rocket motor body for dents and cracks.	If dent is greater than 1/8" or crack is visible. Reject and return to ASP.

Legend:

(1) Quick-Release Pin
(2) Head Cap
(3) Thrust Neutralization Plug
(4) Electrical Lead
(5) Button Lug Bands

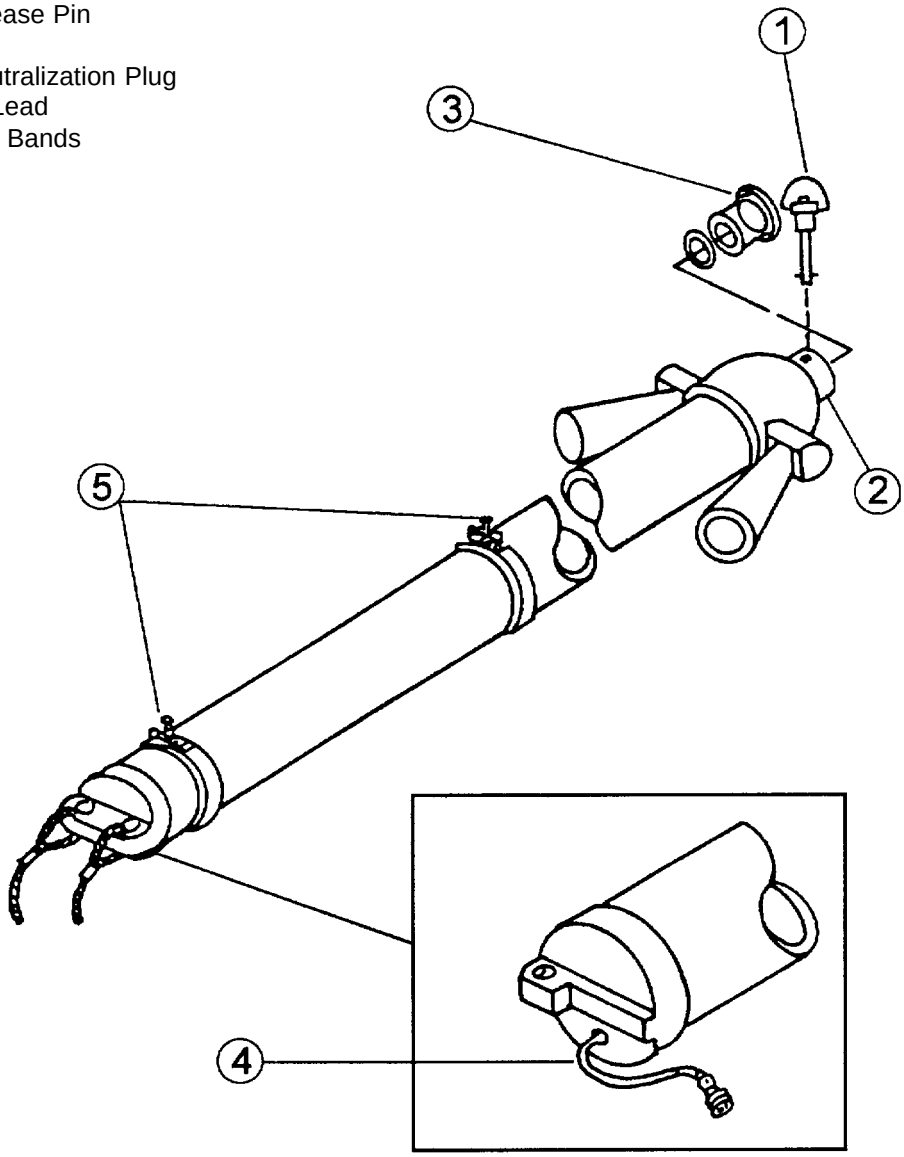

Figure 2.39. MK 22 MOD 4 Rocket Motor Components

(2) If there is no visible damage, consider the rocket safe to use.

(3) If you see damage, make sure that the electrical protective cap is on rocket motor lead. Return unserviceable rocket motor to ASP for replacement.

2.7.6 INSTALLING ROCKET MOTOR ON LAUNCHER RAIL

a. Initial Setup

· **Materials/Parts**

- Tiedown straps (NSN 5975-00-074-2072)

WARNING

· **IF ROCKET MOTOR IS DROPPED MORE THAN 24 INCHES, IT SHOULD NOT BE FIRED. A CRACKED ROCKET MOTOR GRAIN CAN CAUSE INCREASED INTERNAL PRESSURE AND BURSTING OF THE MOTOR CASE.**

· **ENSURE ROCKET MOTOR BUTTON LUG BANDS ARE FULLY ENGAGED ON THE LAUNCHER ALIGNMENT PINS AND HAND KNOBS ARE TIGHTENED. A LOOSE ROCKET MOTOR CAN CAUSE ERRATIC FLIGHT.**

CAUTION

DO NOT EXPOSE ROCKET MOTOR TO DIRECT SUNLIGHT LONGER THAN NECESSARY. IF ROCKET MOTOR HAS BEEN IN DIRECT SUN FOR A LONG PERIOD, PLACE IN SHADE AND KEEP WITHIN SAFE FIRING TEMPERATURE LIMITS FOR AT LEAST 6 HOURS BEFORE FIRING. DO NOT LAUNCH ROCKET WHEN ITS TEMPERATURE EXCEEDS UPPER SAFE FIRING LIMIT (125° F). ROCKET WILL BE CONSIDERED TO BE ABOVE THE UPPER TEMPERATURE LIMIT IF SURFACE IS TOO HOT TO KEEP A HAND ON IT. DO NOT TAMPER WITH OR ATTEMPT TO REPAIR ROCKET BEYOND INSERTING AND REMOVING THE BALL-LOCK PIN.

b. Install Rocket Motor on Launcher Rail

(1) With rocket motor pointing forward, use three personnel to lift and lay rocket motor onto linear demolition charge. Reposition personnel on top of trailer and line charge and hold rocket motor in front of launcher rail (see Figure 2.40).

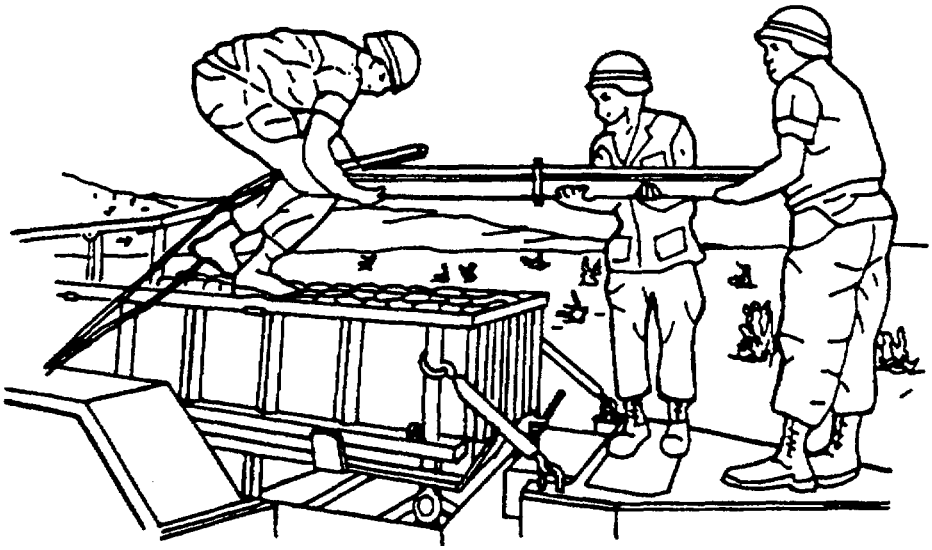

Figure 2.40. Installing Rocket on Launcher Rail and Check-out

(2) Insert rocket motor (1)(see Figure 2.41) rear button lug into launcher rail groove (2), while keeping the front lug aligned with the rail groove.

(3) Lift up two forward hinged alignment pins (3) on the sides of the rail and slide rocket motor rear button lug just past forward hinged alignment pins.

(4) Insert front button lug into launcher rail groove (2) and slide rocket motor down the rail for approximately 1 foot (front button lugs stop before front hinged alignment pins).

(5) Position one person at rear of trailer to operate rocket-release mechanism (4). One person must hold front alignment pins together to ensure pins seat on rocket motor band assemblies.

NOTE

ONE PERSON MUST HOLD FRONT ALIGNMENT PINS TOGETHER TO ENSURE PINS SEAT ON ROCKET MOTOR BAND ASSEMBLIES.

(6) Pull back on rocket-release handle (4).

(7) Push rocket motor (1) rearward until it firmly seats on front and rear alignment pins (3) and (5).

(8) Release rocket release handle (4). Rocket motor should be locked in place.

Legend:

(1) Rocket Motor
(2) Rail Groove
(3) Alignment Pins, Front
(4) Rocket Motor Release Handle
(5) Alignment Pins, Rear
(6) Hand Knobs
(7) Rocket Motor Bands
(8) Bolts

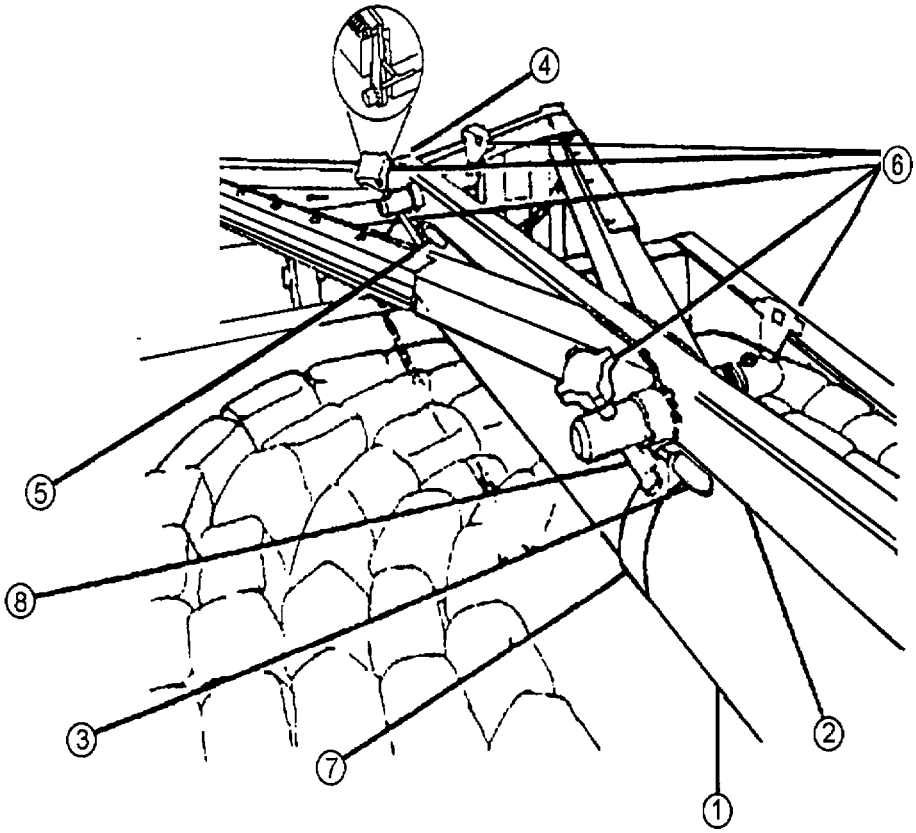

Figure 2.41. Rocket Motor Release Mechanism Check-out

NOTE

THE FOLLOWING EIGHT STEPS CHECK THE OPERATION OF THE ROCKET RELEASE MECHANISM.

c. Check Operation of Rocket Motor Release Mechanism

(1) Pull forward on rocket motor (1)(see Figure 2.41) to ensure that there is no forward movement.

(2) Pull back on rocket release handle (4) and hold. Rocket should be free to move forward.

(3) Pull rocket motor (1) forward and clear of alignment pins (3 and 5).

(4) While holding front alignment pins closed, push rocket motor (1) back, re-engaging alignment pins (3 and 5).

(5) Release rocket motor release handle (4).

(6) Pull forward on rocket motor (1) to ensure that there is no forward movement. Rocket motor should be locked in place.

CAUTION

THE ELECTRICAL LEAD FROM THE ROCKET MOTOR MUST NOT BE TIED OR SECURED TO ANY PART OF THE LAUNCHER/LAUNCHER RAIL.

(7) Pull Hand Knobs (6) on right side of rail (2) away from rail while rotating attached bolt downward into a vertical position. Hand knobs may have to be turned several times counter-clockwise before the bolts can be properly seated.

(8) Hand-tighten all four hand knobs (6) to engage rocket band assemblies (7). Bolts (8) should be at right angles to rocket band assembly

CAUTION

IF LAUNCHER IS TO BE TOWED WITH ROCKET ON LAUNCHER RAIL, MAKE SURE THAT THE TOWING VIBRATION DOES NOT RELEASE THE SWAY BRACE HAND KNOBS PREMATURELY. IF THE KNOBS ARE RELEASED DURING TOWING, THE ROCKET MOTOR WOULD BE ALLOWED TO SWING FREELY AND COULD DAMAGE THE LAUNCHER RAIL AND/OR ROCKET MOTOR.

d. Secure Rocket Band Assemblies with Tiedown Straps

(1) Starting at one of the rear hand knobs (1)(see Figure 2.42) and insert the tapered-end (2) of a tiedown (3) through the small gap between the rear edge of the suspension band (4) of the rocket motor and the forward edge of the welded hinge (5) which supports the guide pin (6).

(2) Push strap through until tapered-end (2) is accessible at the rear of the welded hinge (5). If gap between rocket motor band (4) and welded hinge (5) is too small to accommodate the strap tiedown (3), move the rocket motor (7) forward approximately 1/16 inch.

(3) Bring tapered-end of tiedown (2) down under the guide pin (6) directly beneath the latch-end (8) of the tiedown. Position the tiedown so that equal amounts of tiedown extend from the top and bottom of the guide pin (6).

(4) Place the latch-end (8) of the tiedown behind and around the shaft of the hand knob bolt (9) and insert tapered-end of tiedown into the latch-end of the tiedown.

(5) Pull up slack in tiedown until tight around the sway brace. Properly installing the tiedown will prevent the sway brace hand knob assembly (10) from rotating until the rocket is launched.

(6) Repeat steps 1 thru 5 for the other hand knob assembly.

Legend:

(1) Hand knob
(2) Tapered-end of Tiedown
(3) Tiedown
(4) Rocket Motor Band
(5) Welded Hinge
(6) Guide Pin
(7) Rocket Motor
(8) Latch-end of Tiedown
(9) Bolt
(10) Hand Knob Assembly

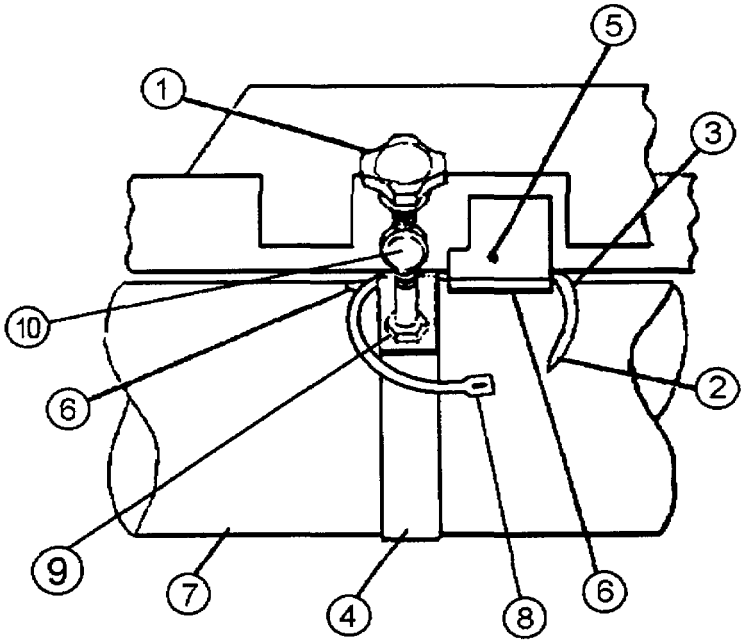

Figure 2.42. Procedure to Secure Rocket to Sway Braces with Tiedowns

NOTE

IF THE ROCKET IS LAUNCHED OR REMOVED, NEW TIEDOWNS WILL BE REQUIRED FOR THE NEXT ROCKET MOUNTED ON THE LAUNCHER RAIL.

2.7.7 ROCKET ATTACHMENT TO LINEAR DEMOLITION CHARGE

a. Initial Setup

- Tools
  - Adjustable wrenches, two (NSN 5120-00-423-6728)
- Materials/Parts
  - Bungee Straps
  - Electrical tape, masking tape or ordnance tape (NSN 5970-00-686-9153)
  - Rocket motor packing
- General Safety Instructions
  - See following cautions.

CAUTION

IF THE MICLIC WILL BE TOWED LONG DISTANCES, ESPECIALLY OVER ROUGH TERRAIN TO THE BREACH, THEN LOCK THE LAUNCHER RAIL IN PLACE WITH THE BALL-LOCK PINS. HOWEVER, THE OPERATOR WILL NEED TO DISMOUNT BEFORE THE MINEFIELD AND RE-INSTALL THE BALL-LOCK PINS IN THE RAISE POSITION.

b. Raise Launcher

(1) Install ball-lock pins (1)(see Figure 2.43) into RAISE (side) position in launcher rail supports (2). Release detents (3) by pushing down on levers.

(2) Operate hand pump until launcher rail (4) reaches 20° on clinometer (5).

(3) Install ball-lock pins (1) in LOCK (front) position.

Legend:

(1) Ball-lock Pins
(2) Launcher Supports
(3) Detents
(4) Launcher Rail
(5) Clinometer
(6) Bridle Cable
(7) Linear Demolition Charge
(8) Charge Container
(9) Bolt
(10) Nut
(11) Rocket Harness Connector
(12) Bridle Cable Loop
(13) Hook and Pile Fastener
(14) Protective Nylon Cover
(15) Pump Valve Lever

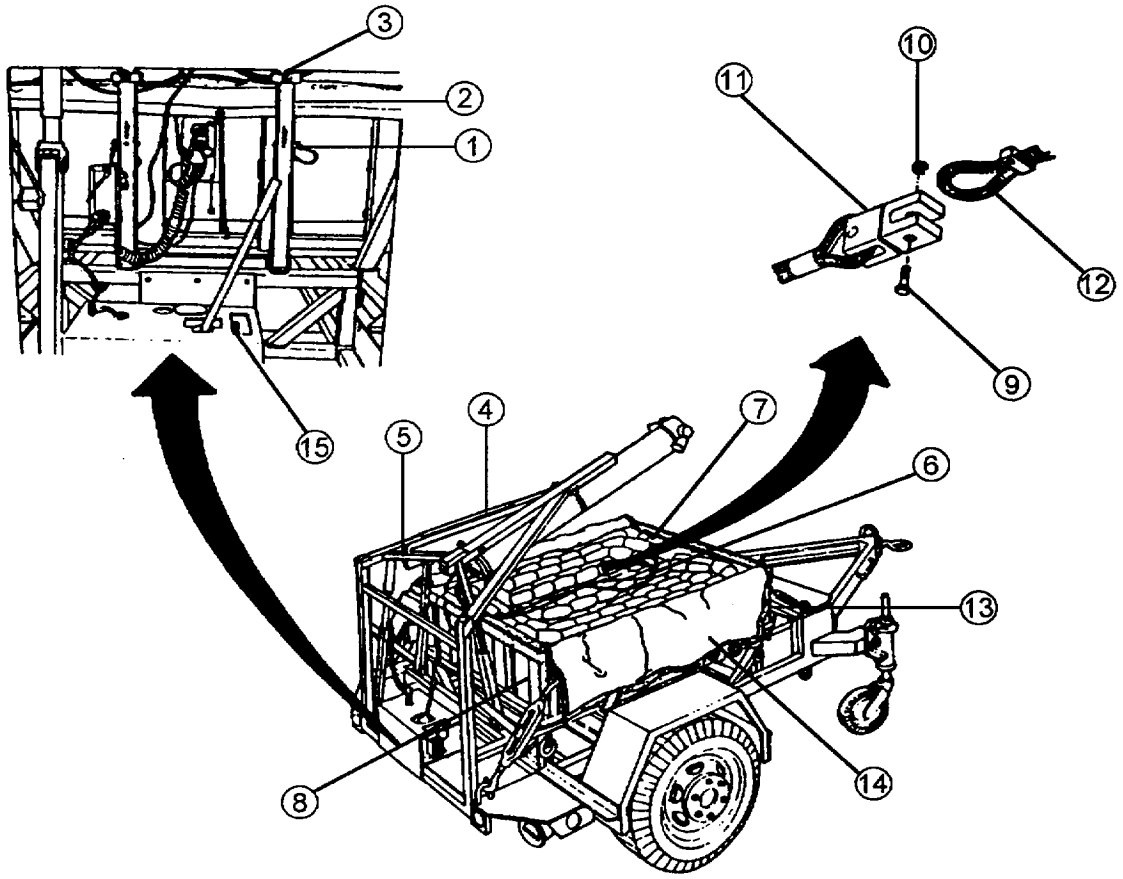

Figure 2.43. Attachment of Linear Demolition Charge to Rocket Motor

CAUTION

CABLE CAN FALL OUT OF THE CABLE SHEATH DURING TRANSPORTATION OF THE MICLIC OVER ROUGH TERRAIN. USE ELECTRICAL TAPE TO KEEP CABLES IN PLACE.

c. Fasten Rocket Bridle Cable to Cable Sheath on Rail

(1) Insert one bridle cable (1) under each launcher cable sheath (left to left and right to right). Start from rear portion of sheath utilizing cable at rocket motor end. Ensure cable slides freely and 18-24 inches of cable are looped out of rear of cable sheath (see Figure 2.44). The loop is formed between rear of sheath and rear of rocket motor; 18-24 inches is not the diameter of the loop. It is the length of cable to form the loop.

(2) Apply strips of (electrical, ordnance, or masking) tape just forward, rearward and middle of the sheaths. Ensure tape overlaps cable and launch rail support (2-3 wraps).

(3) Launchers with sprung cable sheaths will require the taping of cables in place with tape.

Legend:

(1) Bridle Cable
(2) Linear Charge
(3) Charge Container

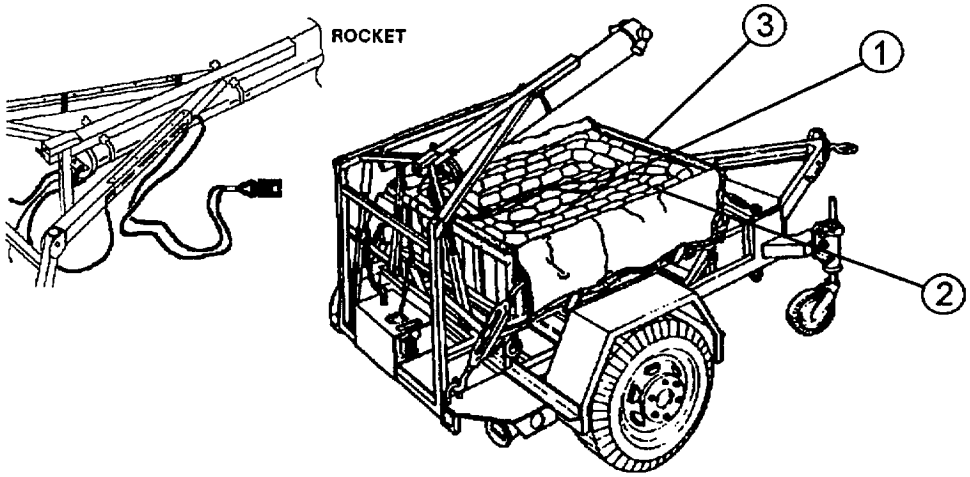

Figure 2.44. Positioning of the Bridle Cable on the Linear Charge

d. Fasten Bridle Cable to Rocket Harness Connector

(1) Use two adjustable wrenches from the launcher storage container. Remove bolt (1)(see Figure 2.46) and nut (2) from rocket harness connector (3).

NOTE

ENSURE THAT BRIDLE CABLE IS NOT TWISTED.

(2) Slip rocket bridle cable loop (4) in rocket harness connector (3).

(3) Replace bolt (1) through rocket harness connector (3) and rocket bridle cable loop (4).

(4) Use two adjustable wrenches to tighten nut (2) onto bolt (1).

Legend:

(1) Bolt
(2) Nut
(3) Rocket Harness Connector
(4) Bridle Cable Loop

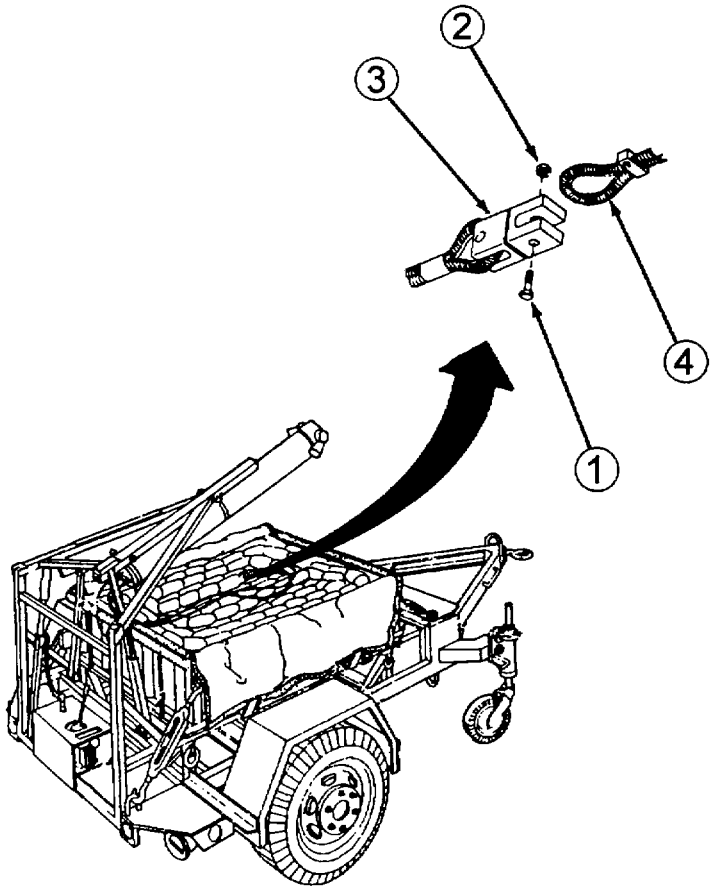

Figure 2.45. Fasten Bridle Cable to Rocket Harness Connector

e. Position Bridle Cable and Close Nylon Cover

(1) Loop the bridle cables (1)(see Figure 2.46) from front of cable sheath to rear center of charge container (2), laying remainder of bridle cable forward onto charge in an "S" pattern.

(2) Starting from rear, close hook-and-pile fasteners (3) of protective nylon cover (4). Position bridle cable (1) so that bridle cable exits from wear pad of protective nylon cover.

(3) Secure side-rear shock cords to charge container (2).

Legend:

(1) Bridle Cable
(2) Charge Container
(3) Hook and Pile Fastener
(4) Protective Nylon Cover
(5) Ball-Lock Pins
(6) Rocket Motor Packing
(7) Pump Valve Lever
(8) Launcher Rail
(9) Bungee Straps

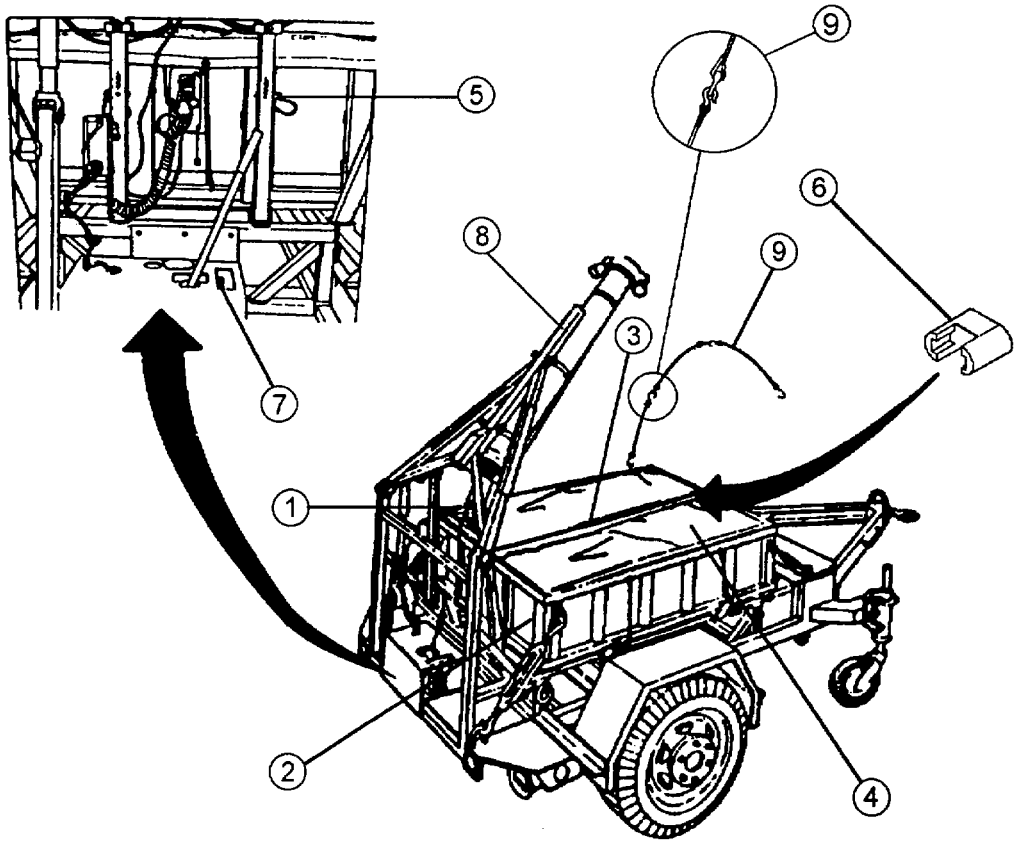

Figure 2.46. Secure Launcher Rail and Rocket Motor for Transport over Rough Terrain

f. Lower Launcher Rail and Tie Rail Down

(1) Remove ball-lock pins (5)(see Figure 2.46) from LOCK (front) position.

(2) Place packing (6} from rocket motor on top of demolition line charge as a cushion for the rocket motor.

(3) Move pump valve lever (7) slowly toward the RELEASE position and slowly lower launcher rail (8) until rocket just rests on packing (6). Install ball-lock pins (5) in the LOCK (front) position.

(4) Tie launch rail (8) down with four bungee straps (9) to front of line charge container. Bungee cord straps (9) must be removed before launcher rail (8) can be remotely raised.

(5) Move pump valve lever (7) to the HOLD position.

2.7.8 MOD 0/1 LAUNCHER ELECTRICAL CONNECTIONS

a. Initial Setup

· **Tools and Special Tools**

- M34 Blasting Machine
- M51 Blasting Caps Test Set
- M5 Crimping Tool (NSN 5120-00-029-0683)

· **References**

- TM 9-1300-206

· **General Safety Instructions**

- See cautions and notes that follow.

CAUTION

WHEN CONNECTING CABLE NO. 3 TO THE SAFETY SWITCH OR THE SAFETY SWITCH OUTPUT CONNECTOR TO RECEPTACLE NO. 1 ON THE LINE CHARGE RECEPTACLE BOX, ENSURE THAT THE CONNECTION IS TIGHT. PUSH BACK AND FORTH ON THE BACK OF THE CABLE CONNECTOR AFTER HAND TIGHTENING. IF THE BACK OF THE CONNECTOR FEELS LOOSE, UNSCREW THE CONNECTOR, CLEAN THE THREADS, AND RECONNECT.

NOTE

WHEN REMOVING OR INSERTING BALL-LOCK PINS, IT MAY BE NECESSARY TO RAISE OR LOWER THE LAUNCHER RAIL SLIGHTLY.

b. Check operation of M51 Blasting Cap Test Set and M34 Blasting Machine

(1) Remove selector switch box (1)(see Figure 2.47), cable assembly No. 3 (2), M51 blasting caps test set and M34 blasting machine from storage container. Connect cable assembly No. 3 (2) to selector switch box (1).

(2) Pull up knob and rotate switch (3) through its operation positions and return it to OFF.

Legend:

(1) Selector Switch Box
(2) Cable Assembly No. 3
(3) Knob (Switch)
(4) Cable Assembly No. 2

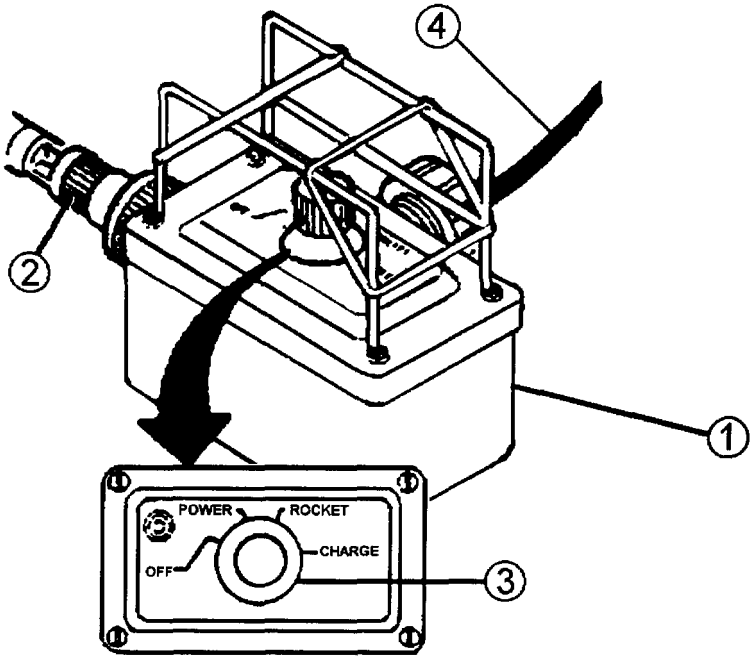

Figure 2.47. Selector Switch Box

(3) To check cable No. 2 (4)(see Figure 2.47) for proper functioning, connect cable No. 2 to M51 blasting cap test set with one lead to each connection post (2)(see Figure 2.47) of the M51. Set selector switch box knob (3)(see Figure 2.47) to the POWER position and operate M51 tester handle (3)(see Figure 2.48). Lamp will light on tester indicator (4)(see Figure 2.48) of M51 if cable No. 2 (4)(see Figure 2.47) and selector switch box (1) do not have "open" circuit.

Legend:

(1) M51 Blasting Cap Test Set
(2) Connection Posts
(3) Tester Handle
(4) Tester Light
(5) Safety Clip

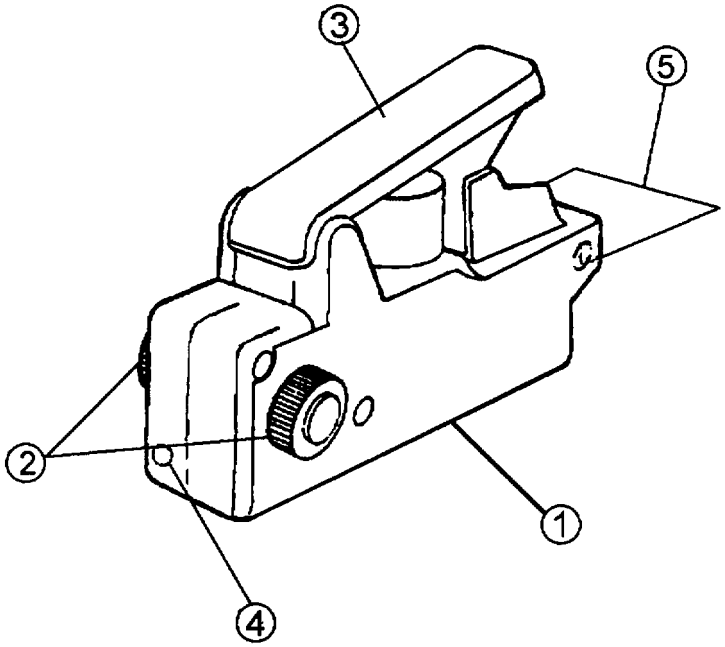

Figure 2.48. M51 Blasting Cap Test Set

(4) To check M51 blasting cap test set (1)(see Figure 2.48) for proper functioning: Using the M5 crimping tool, short both posts (2) of the M51 and operate the M51 tester handle (3). Lamp will light on tester indicator (4) if M51 is functioning properly. Light may be very dim. Secure tester handle (3) with safety clip (5).

NOTE

DO NOT ATTACH ANY ELECTRICAL WIRES TO M34 BLASTING MACHINE.

(5) Check the M34 blasting machine (1)(see Figure 2.49) by repeatedly squeezing the operating handle (2) until indicator lamp (3) lights. If lamp does not light, reject M34 blasting machine and obtain a replacement M34 blasting machine. Secure operating handle (2) with safety clip (4).

Legend:

(1) M34 Blasting Machine
(2) Operating Handle
(3) Indicator Lamp
(4) Safety Clip

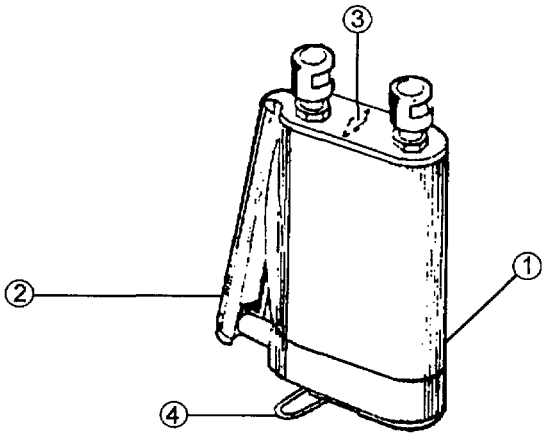

Figure 2.49. M34 Blasting Machine

c. Connect Electrical Cables to Linear Demolition Charge

(1) If preparing for armored vehicle use, then install cable No. 3 (1)(see Figure 2.50) through holders on left side of launcher.

(2) Using half-hitch knot, secure cable No. 3 (1) to left rear of launcher frame. Allow adequate slack to make the connection to safety switch assembly (2) at receptacle J1.

(3) Remove protective cap (3) from receptacle No. 1 (4), top power receptacle No. 1.

CAUTION

WHEN CONNECTING CABLE NO. 3 TO THE SAFETY SWITCH OR THE SAFETY SWITCH OUTPUT CONNECTOR TO RECEPTACLE NO. 1 ON THE LINE CHARGE RECEPTACLE BOX, ENSURE THAT THE CONNECTION IS TIGHT. PUSH BACK AND FORTH ON THE BACK OF THE CABLE CONNECTOR. IF THE BACK OF THE CONNECTOR FEELS LOOSE, UNSCREW THE CONNECTOR, CLEAN THE THREADS AND RECONNECT.

NOTE

ALL ELECTRICAL CONNECTORS ARE THE SCREW-ON TYPE. ENSURE THAT ALL LINEAR DEMOLITION CHARGE CONNECTORS SCREW ONTO RECEPTACLES AND ARE HAND TIGHT.

(4) Remove safety switch electrical connector (5) from J-1 (6) and secure safety switch electrical connector (5), to receptacle No. 1 (4) on linear demolition charge junction box.

(5) Remove protective cap from cable No. 3 (1) and secure cable to safety switch assembly receptacle (6), J-1.

NOTE

KEEP DEMOLITION KIT FUZE M1134 AND ROCKET MOTOR AWAY FROM SOURCES OF RADIO FREQUENCY (RF) ENERGY SUCH AS RADIO OR RADAR TRANSMITTERS. ALTHOUGH THE ELECTRO-EXPLOSIVE DEVICES IN THE FUZE AND MOTOR ARE BOTH WELL PROTECTED FROM RF ENERGY INITIATION, THERE IS NO ABSOLUTE PROTECTION. KEEP AT LEAST 5 FEET (1.52 M) BETWEEN A LOW POWER OPERATING TRANSMITTER (SUCH AS A WALKIE-TALKIE) AND THESE ITEMS. THE STANDARD RADIOS USED IN EXPECTED TOWING VEHICLES WILL PRESENT NO PROBLEMS AT THE DISTANCES THEY WILL NORMALLY BE FROM THE FUZE AND ROCKET MOTOR. FOR SAFE DISTANCES FROM HIGHER POWERED TRANSMITTERS, REFER TO TM 9-1300-206.

(6) Remove protective cap (7) from receptacle No. 2 (8) which is the middle receptacle on the linear demolition charge junction box.

(7) Secure linear demolition charge electrical connector (9) to receptacle No. 2 (8) on linear demolition charge junction box.

(8) Remove protective cap (10) from receptacle No. 3 on container (11), bottom receptacle of linear demolition charge junction box. Connect the shorting plug (12), from spare parts kit, to receptacle No. 3 (11).

Legend:

(1) Cable No. 3
(2) Safety Switch
(3) Cap, Receptacle No. 1
(4) Power Receptacle No. 1
(5) Safety Switch Lead
(6) Safety Switch Receptacle, J1
(7) Cap, Receptacle No. 2
(8) Linear Demolition Charge Receptacle No. 2
(9) Linear Demolition Charge Lead
(10) Cap, Receptacle No. 3
(11) Receptacle No. 3
(12) Shorting Plug Rocket for Receptacle No. 3

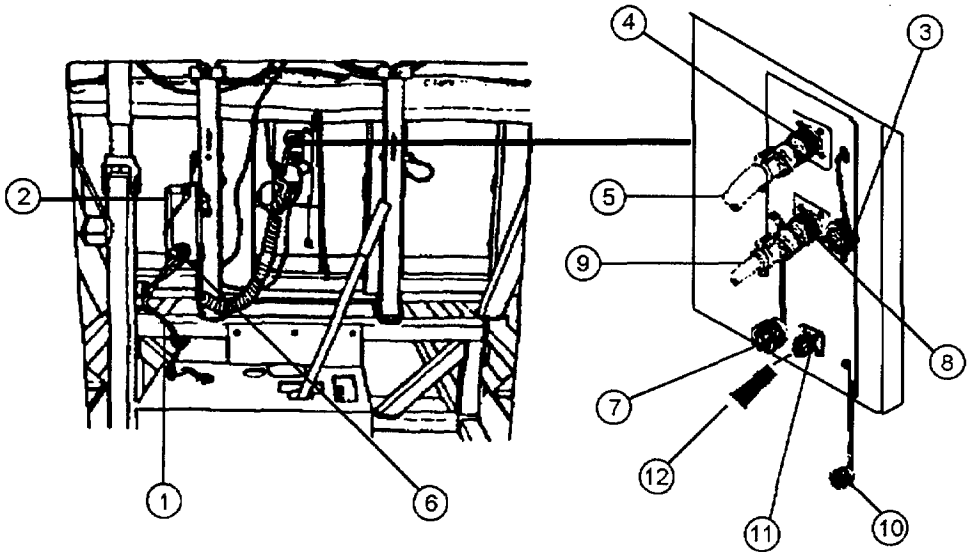

Figure 2.50. Electrical Connections for Launcher and Demolition Charge

2.7.9 MOD 011 LAUNCHER CONTINUITY CHECK

a. Initial Setup

· **Tools and Special Tools**

- M51 Blasting Cap Test Set
- Shorting plug(s)

b. Prepare for Continuity, Circuit Test

(1) Attach cable No. 2 (1)(see Figure 2.51) to M51 blasting cap test set (2).

(2) If spare parts kit contains the male shorting plug, disconnect linear demolition charge electrical receptacle connector from receptacle No. 2 and connect male shorting plug to receptacle.

(3) Ensure launcher rail is positioned at about 5° elevation.

NOTE

TO OPERATE THE SELECTOR SWITCH BOX FUNCTIONS, PULL UP AND ROTATE KNOB TO THE DESIRED POSITION.

Legend:

(1) Cable No. 2
(2) M51 Blasting Cap Test Set
(3) Selector Switch Knob
(4) Ball-lock Pins
(5) Launcher Supports
(6) Detents
(7) Launcher Rail
(8) Pump Valve Lever
(9) Storage Container
(10) Selector Switch Box

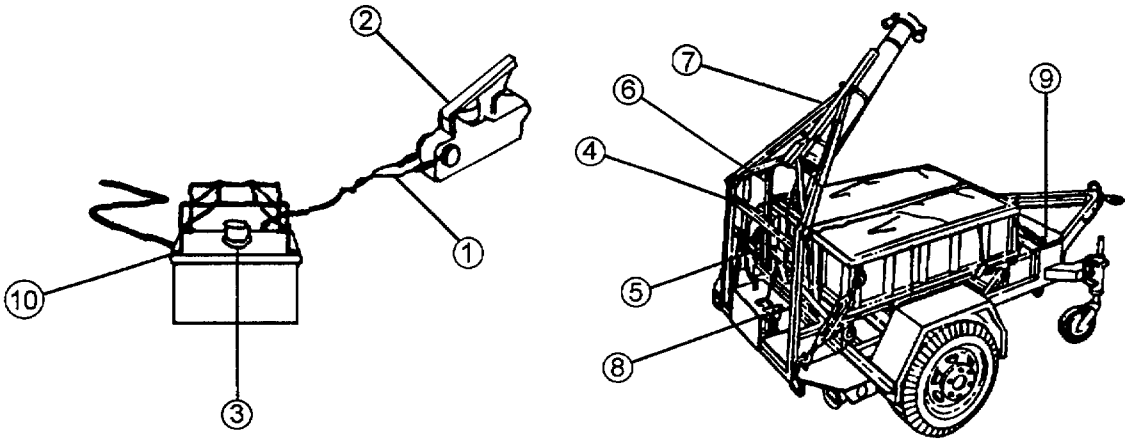

Figure 2.51. Procedure to Test Rocket and Charge Circuits

c. Check Circuits with Safety Switch in Open (Rail Down) Position (see Figure 2.52)

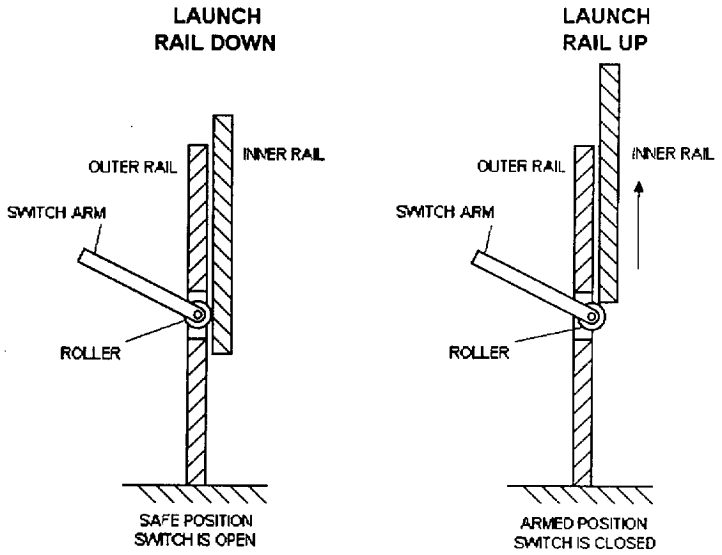

Figure 2.52. Safety Switch Open and Closed Positions

(1) Ensure selector switch knob (3) is in OFF position (see Figure 2.51).

(2) Operate M51 blasting cap test set (2). Test light should NOT light, i.e. selector switch is open in OFF position.

(3) Set selector switch knob (3) to POWER position.

(4) Operate M51 blasting cap test set (2) and ensure test light lights, i.e. selector switch is closed in POWER position.

(5) Set selector switch knob (3) to ROCKET position.

(6) Operate M51 blasting cap test set (2). Test light should NOT light, i.e. safety switch is open when rail is down.

(7) Set selector switch knob (3) to CHARGE position.

(8) Operate M51 blasting cap test set (2). Test light should NOT light, i.e. safety switch is open when rail is down.

d. Check Circuits with Safety Switch Closed (Rail Up)(see Figure 2.52)

(1) Insert ball-lock pins (4)(see Figure 2.51) in the RAISE (side) position in launcher rail supports (5). Engage detents (6) by pulling down on levers.

(2) Manually raise launcher rail (7) to 45-47° with hydraulic pump. Remove bungee straps before raising launcher rail if straps are holding the rail down.

(3) Set selector switch knob (3) to ROCKET position.

(4) Operate M51 blasting cap test set (2). Test light should light, i.e. safety switch is closed and circuit is made through rocket shunt when rail is up.

(5) Set selector switch knob (3) to CHARGE position.

(6) Operate M51 blasting cap test set (2). Test light should light, i.e. safety switch is closed and circuit is made through line charge shunt when rail is up.

(7) Return selector switch knob (3) to OFF position.

(8) If discrepancies exist, recheck connections and repeat above steps as necessary. If discrepancies still exist, disconnect safety switch electrical lead from receptacle No. 1 and replace protective cap. Request assistance from Unit Maintenance.

2.7.10 SECURE TEST EQUIPMENT AND LAUNCHER RAIL/ROCKET

a. Disengage detents (6)(see Figure 2.51) by pushing up on detent levers.

b. Move pump valve lever (8) slightly toward RELEASE position and slowly lower launcher rail (7) until rocket just touches nylon cover/rocket motor packing. Move pump valve lever (8) to HOLD position.

c. The primary operator will keep the M34 blasting machine and M51 blasting cap test set under control as a safety procedure. Return M51 blasting cap test set to storage container (9).

d. Roll up extra lanyard cable and place it with selector switch box (10) into the storage container (9).

e. Disconnect shorting plugs (1)(see Figure 2.53) from receptacles and retain. Replace protective cap (2) on receptacle No. 3 (3). Install linear demolition charge electrical lead connector (4) to receptacle No. 2 (5).

f. Return shorting plug to storage container (9) and secure lid.

g. Secure launch rail/rocket down with four bungee straps (provided for container cover) by hooking bungee strap on one side of trailer, go over rail and hook bungee strap to other side of trailer. Remove bungee straps, rocket motor packing and open cover before deploying charge.

Legend:

(1) Shorting Plugs
(2) Cap, Receptacle No. 3
(3) Receptacle No. 3
(4) Charge Lead Connector or Shorting Plug
(5) Receptacle No. 2
(6) Storage Container

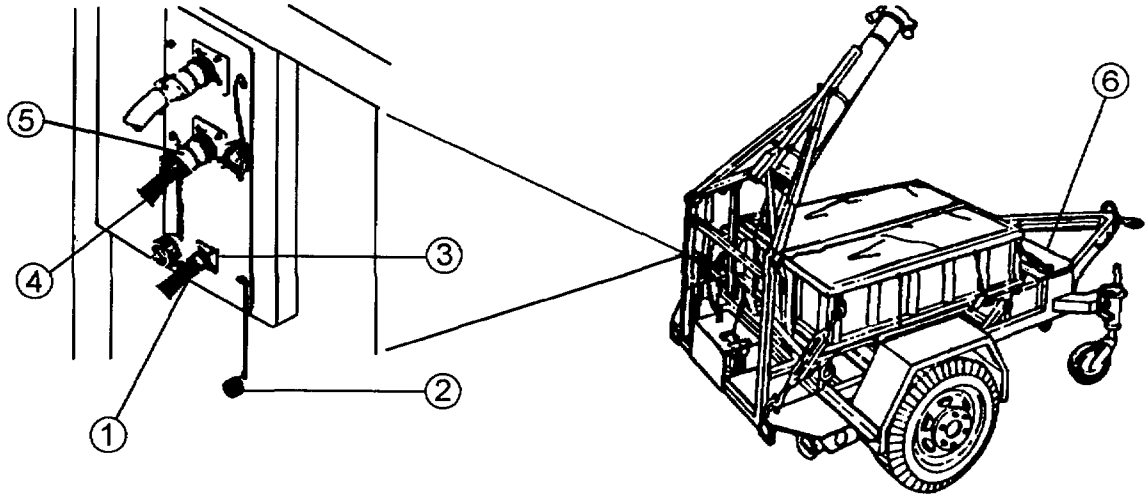

Figure 2.53. Removal and Storage of Shorting Plug

2.7.11 MOD 0/1 LAUNCHER FINAL PREPARATIONS FOR DEPLOYMENT

a. Initial Setup

· **Tools and Special Tools**

- M34 Blasting Machine
- M51 Blasting Cap Test Set

· **References**

- TM 9-2330-205-14&P
- TM 9-2330-247-14&P
- TM 9-2330-389-14&P

· **General Safety Instructions**

- See cautions and warnings at front of this manual.

WARNING

- **THE M34 BLASTING MACHINE SHOULD NOT BE CONNECTED TO THE SELECTOR SWITCH BOX UNTIL REACHING THE BREECH POSITION AND THE LAUNCHER RAIL IS RAISED TO THE FIRING POSITION AND YOU ARE READY TO FIRE. THE PRIMARY OPERATOR WILL KEEP THE M34 BLASTING MACHINE UNDER CONTROL AT ALL TIMES.**

- **USMC ONLY. A LOOSE CABLE ON THE MOD 3 ROCKET MOTOR WILL CAUSE ERRATIC FLIGHT. DO NOT INSTALL A ROCKET WITH A LOOSE CABLE. DO NOT TOUCH THE CABLE DURING ROCKET HANDLING.**

b. Final Preparation for Deployment

NOTE

PERFORM THE FOLLOWING PROCEDURES AS CLOSE TO BREECH POINT AS PRACTICAL.

(1) Remove protective caps from rocket motor's electrical lead (1)(see Figure 2.54) and receptacle No. 3 (2).

(2) Secure rocket motor's lead (1) to receptacle No. 3 (2).

WARNING

FAILURE TO INSERT THE PIN COMPLETELY INTO THE THRUST NEUTRALIZATION PLUG MAY RESULT IN THE ROCKET MOTOR BURNING ON THE RAIL OR PARTIAL DEPLOYMENT OF THE LINEAR CHARGE. THE RETAINER SCREW FOR THE MOD 3 ROCKET (FIGURE 1.9), AND THE QUICK-RELEASE PIN FOR THE MOD 4 ROCKET (FIGURE 1.10) ARE INSERTED IN THE FRONT OF THE ROCKET. PINS MUST BE INSERTED; YOUR LIFE MAY DEPEND ON IT.

(3) Insert pin (3) into thrust neutralization plug (see Figure 2.54).

Legend:

(1) Rocket Motor's Electrical Lead
(2) Receptacle No. 3
(3) Rocket Motor Pin
(4) Detents
(5) Ball-Lock Pins
(6) Hydraulic Control Valve Lever
(7) Pump Handle
(8) Pressure Gage

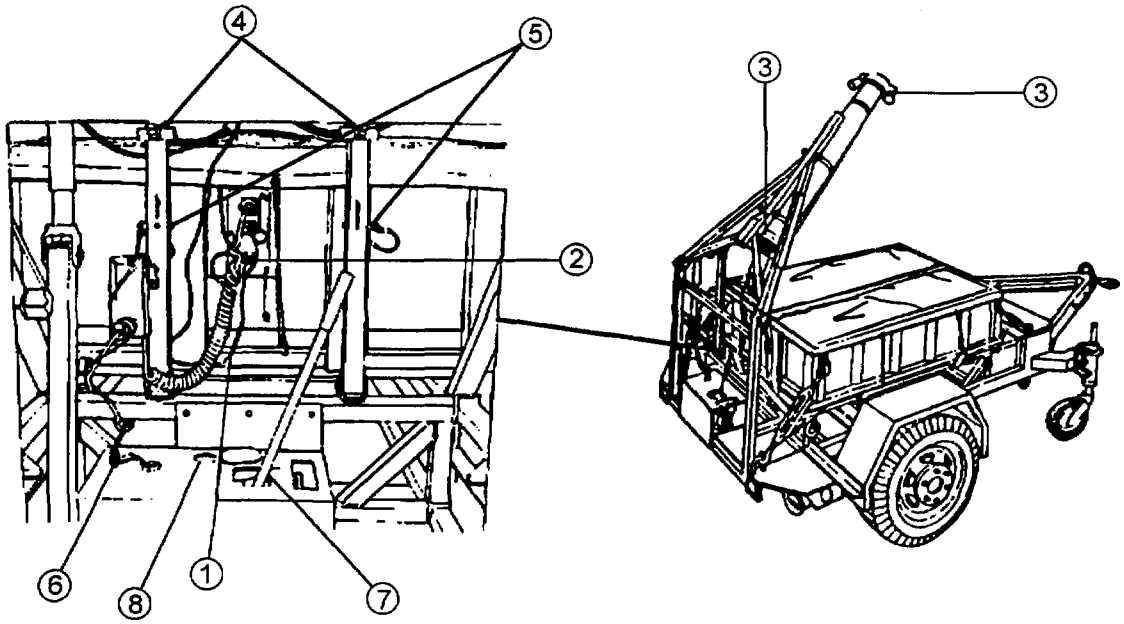

Figure 2.54. Final Preparations to Deploy from MOD 0 and MOD 1 Launcher

CAUTION

- **FAILURE TO ENGAGE THE DETENTS WILL RESULT IN THE RAIL RAISING PAST THE 45-47° FIRING ANGLE. THE ROCKET MUST NOT BE LAUNCHED AT A HIGH ANGLE OF ELEVATION OR RESULTS MAY BE CATASTROPHIC. YOUR LIFE MAY DEPEND ON ENGAGING THE DETENTS. BALL-LOCK PINS MUST BE IN RAISE POSITION OR RAIL/ROCKET WILL NOT RAISE.**

- **BALL-LOCK PINS MUST BE IN RAISE POSITION OR RAIL/ROCKET WILL NOT RAISE. FAILURE TO RAISE ROCKET WOULD REQUIRE PERSONNEL TO LEAVE PROTECTED POSITION/ARMORED VEHICLE AND REPOSITIONED BALL-LOCK PINS TO RAISE POSITION.**

(4) Engage detents (4) by pulling down on levers. Ensure that ball-lock pins (5) are in RAISE (side) position.

(5) Move hydraulic control valve lever (6) to PRESSURIZE ACCUMULATOR position.

(6) Operate pump handle (7) until 3,200-3,500 psi (green area) is indicated on pressure gage (8}.

WARNING

- **LAUNCH OF THE M58 LINEAR DEMOLITION CHARGE BY PERSONNEL OUTSIDE OF AN ARMORED VEHICLE IS PROHIBITED. THE LINEAR CHARGE IS SUSCEPTIBLE TO STATIC ELECTRICITY AND CAN PREMATURELY DETONATE IN THE AIR. PREMATURE DETONATION WILL ONLY OCCUR WHEN THE ARRESTING CABLE IS FULLY EXTENDED AND PRESENTS NO DANGER TO PERSONNEL IN A "BUTTONED-UP" ARMORED VEHICLE.**

- **DO NOT TOW MICLC BEHIND AN M1 SERIES TANK. THE EXTREME HEAT OF THE TANK'S EXHAUST CAN IGNITE THE LINEAR DEMOLITION CHARGE OR ROCKET MOTOR.**

(7) Connect trailer to designated towing vehicle. Refer to TM 007007B-24 (**MARINE CORPS ONLY**), TM 9-2330-247-14&P, TM 9-2330-205-14&P OR TM 9-2330-389-14&P.

WARNING

ENSURE TRAILER QUICK-RELEASE OF ASSAULT AMPHIBIOUS VEHICLE IS FUNCTIONING PROPERLY. TRAILER MAY HAVE TO BE REMOTELY RELEASED IF ROCKET BURNS ON THE RAIL OR THE LINE CHARGE IS IMPROPERLY DEPLOYED.

(a) Hitch trailer lunnette to Assault Amphibious Vehicle (AAV) at pintle. Ensure pintle catch is in place.

(b) Raise both landing wheels of M353 trailer (TM 9-2330-247-14&P).

(c) Ensure safety chains and the electrical connections are not fastened to the AAV before arriving at the mine breach.

WARNING

CONNECTING THE M34 BLASTING MACHINE TO THE SELECTOR SWITCH ASSEMBLY ALLOWS A PATH FOR STRAY VOLTAGE TO REACH THE ROCKET MOTOR. THE M34 SHOULD NOT BE CONNECTED TO THE SELECTOR SWITCH ASSEMBLY UNTIL REACHING THE BREECH POSITION AND THE LAUNCHER RAIL IS RAISED TO THE FIRING POSITION AND YOU ARE READY TO FIRE. THE PRIMARY OPERATOR WILL KEEP THE M34 BLASTING MACHINE UNDER CONTROL AT ALL TIMES.

NOTE

IF ARMORED VEHICLE IS NOT BEING USED, OMIT STEP 7 EXCEPT THE M34 BLASTING MACHINE WHICH MUST BE IN POSSESSION OF PRIMARY OPERATOR.

(8) Remove bungee straps that tiedown the rail/rocket, rocket motor packing and open cover.

(9) Transfer selector switch box (1)(see Figure 2.55) and lanyard handle (2) to towing vehicle. It may be necessary to tape or tie cable from safety switch box to vehicle. Transfer M34 blasting machine and M51 blasting cap test set to primary operator.

Legend:

(1) Selector Switch Box
(2) Lanyard Handle

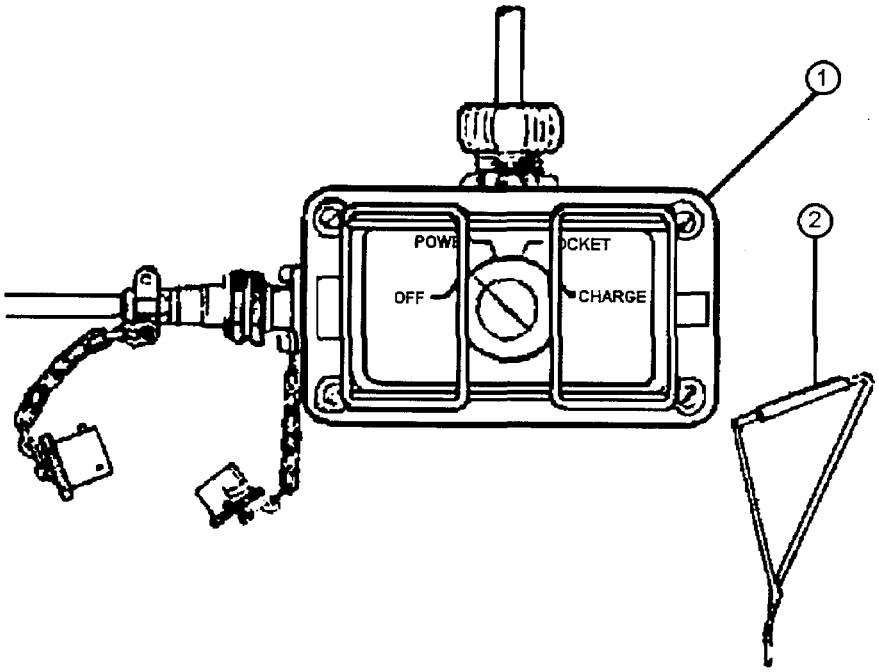

Figure 2.55. Selector Switch Assembly and Lanyard Handle

WARNING

- **WHEN THE TRAILER IS TOWED BY A VEHICLE NOT EQUIPPED WITH A TRAILER BRAKE INTERCONNECTION, RESTRICT OPERATION TO NON-PUBLIC AREAS (UNDER DOT REGULATIONS) AND VEHICLE TO THE FOLLOWING SPEEDS:**

0 to 5 MPH	**ROUGH BROKEN TERRAIN**
0 to 10 MPH	**FLAT ROUGH TERRAIN**
0 to 15 MPH	**OFF-ROAD SMOOTH TERRAIN**
0 to 25 MPH	**SECONDARY ROADS**

- **DO NOT MAKE SHARP TURNS WHEN TOWING THE TRAILER WITH TRACKED VEHICLES. THIS CAN CAUSE THE TRAILER TO OVERTURN AND BE DAMAGED FROM CONTACT WITH TOWING VEHICLES TRACKS. THE VEHICLE COMMANDER SHOULD KEEP THE TRAILER AND ITS CONTENTS UNDER CLOSE SCRUTINY DURING SUCH TOWING.**

- **THE VEHICLE COMMANDER SHOULD CLOSELY MONITOR THE TRAILER AND ITS CONTENTS DURING SUCH TOWING.**

CAUTION

TRANSPORT FULLY ASSEMBLED ROCKET AND LINEAR DEMOLITION CHARGE SLOWLY ACROSS ROUGH TERRAIN OR MICLIC MAY FAIL TO FUNCTION PROPERLY AT BREECH POINT.

NOTE

LIMIT TOWING THE LAUNCHER WITH THE ROCKET MOTOR ON THE LAUNCHER RAIL AS MUCH AS POSSIBLE, ESPECIALLY OFF-ROAD. TRY TO ESTABLISH YOUR LOADING/INSPECTION POINT AS CLOSE AS PRACTICAL TO THE AREA WHERE THE MICLIC WILL BE LAUNCHED. USE ROCKET PACKING TO CUSHION ROCKET MOTOR DURING TRANSPORTATION AND SECURE FRONT OF RAIL WITH BUNGEE STRAPS IF DISTANCE IS LONG. ENSURE BALL-LOCK PINS ARE IN THE RAISE POSITION AND BUNGEE STRAPS ARE REMOVED BEFORE FINAL DEPLOYMENT AREA IS REACHED.

(10) Orient the tow vehicle and launcher at 90° angle to minefield. Stop 200 feet (61 m) from edge of the minefield.

(11) Turn to para. 2.8.1a for final operating procedures for MOD 0/1 launchers.

2.7.12 MOD 2/3 LAUNCHER. INSTALLING REMOTE TRAILER DISCONNECT DEVICE **(ARMY ONLY)**

a. Initial Setup

- **Tools**
  - General Mechanic's Tool Kit (Army NSN 5180-00-177-7033)
- **References**
  - TM 9-2330-205-14&P
  - TM 9-1300-206
  - TM 9-2330-389-14&P
- **General Safety Instructions**
  - See cautions and warnings at front of this manual.

b. Fasten Remote Trailer Disconnect Device to Trailer Lunette

(1) Remove remote disconnect device (1) (see Figure 2.56) from storage container at front of launcher.

(2) Remove six hex head screws (2) from access cover (3) and separate cover from lower housing boss using 1/4-inch hex wrench.

(3) Remove two cap screws (4) and lockwashers from clamp block (5) and separate clamp block (5) from support block (6) using 7/16-inch box or open-end wrench.

(4) Position device on trailer lunette (7) with device jaws pointing to front of trailer. Hold the housing boss of the device up into the lunette ring (7) while locating the support block (6) of the device up into the shaft of the lunette (7).

(5) Secure device to lunette ring using access cover (3) and six hex head screws (2). Ensure screws (2) are tightened evenly.

(6) Secure device to lunette shaft using clamp block (5) and two hex head cap screws (4) and lockwashers. Ensure screws (4) are tightened evenly.

NOTE

IT MAY BE NECESSARY TO INVERT TOWING LUNETTE OF TRAILER TO KEEP TRAILER LEVEL WHEN ATTACHING TRAILER TO SOME VEHICLES. DO NOT INVERT THE LUNETTE ON THE M353 TRAILER (MOD 2 LAUNCHER).

Legend:

(1) Remote Disconnect Device
(2) Hex Head Screws
(3) Access Cover
(4) Cap Screws (2)
(5) Clamp Block
(6) Support Block
(7) Lunette
(8) Hex Head Screws (2) and Washers (2)
(9) Cable Bracket

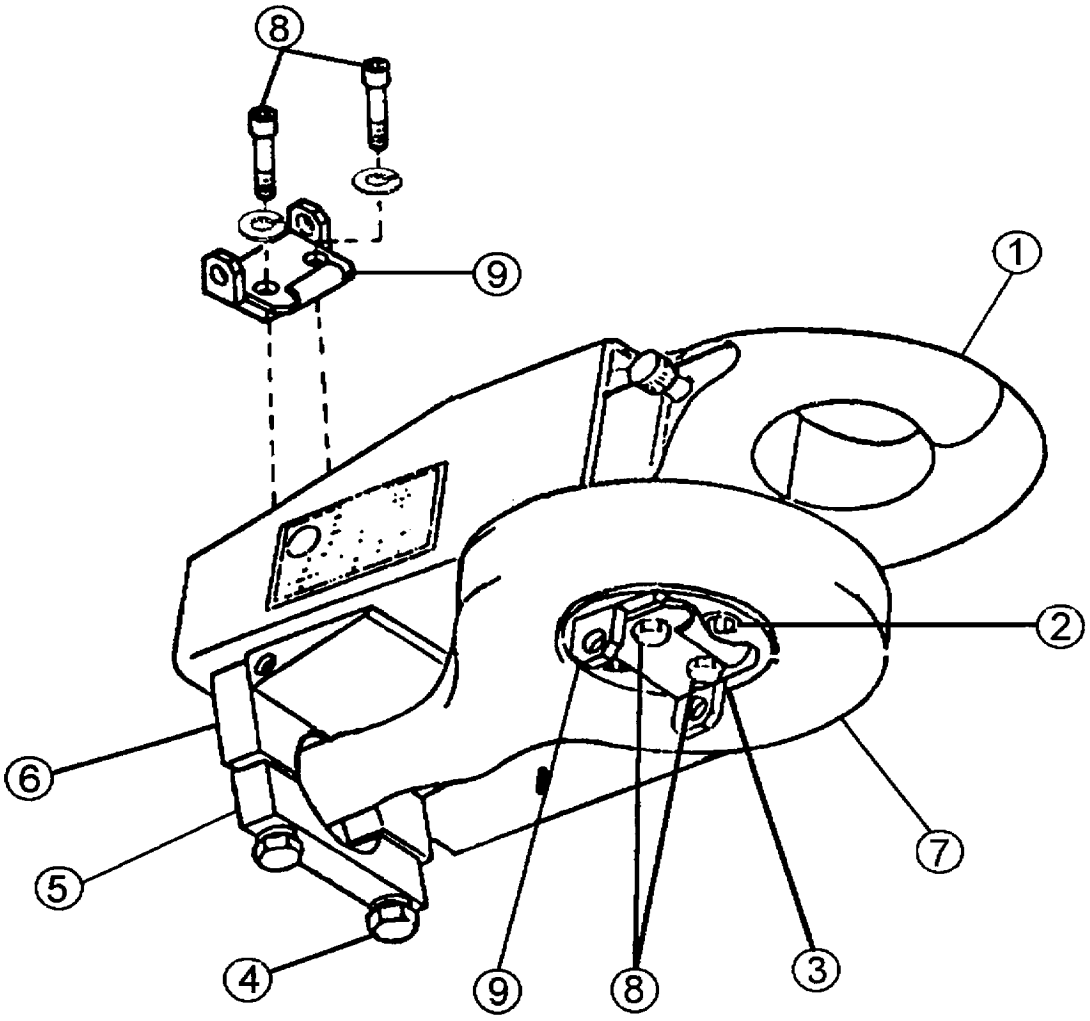

Figure 2.56. Installing Remote Disconnect Device on Trailer Lunette

c. To Inverting Lunette, Perform the Following:

(1) Using 3/16-inch hex wrench, remove two hex head screws (1) (see Figure 2.58) and lockwashers from cable bracket (2) on top of device and remove cable bracket (2).

(2) Replace hex head screws (1) and lockwashers in disconnect device housing.

Legend:

(1) Cotter Pin
(2) Nut
(3) Flatwasher
(4) Chassis
(5) Lunette

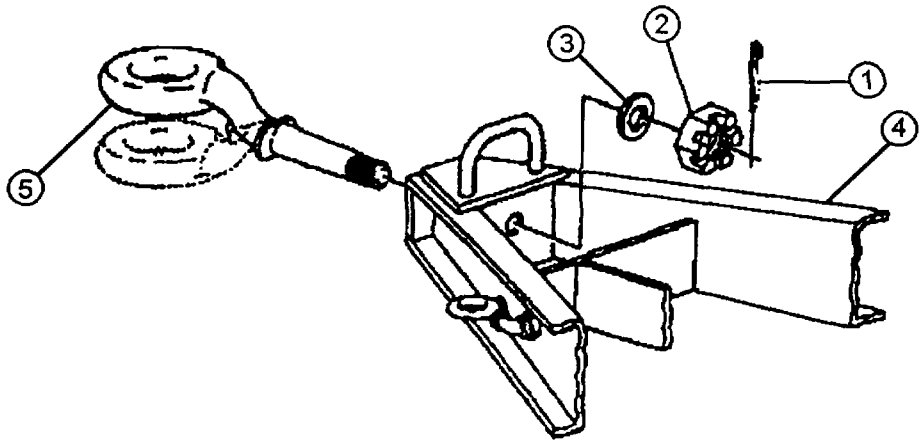

Figure 2.57. Inverting the Lunette

(3) Invert lunette (7)(see Figure 2.56).

(a) Use pliers to remove cotter pin (1) (see Figure 2.57).

(b) Use 1 1/2 inch open wrench to loosen nut (2) and flatwasher (3) from trailer chassis (4).

(c) Pull lunette (5) forward and rotate left or right to the lower position.

(d) Tighten flatwasher (3) and nut (2) to trailer chassis (4). Use torque wrench to torque nut (2) to 400 to 450 ft-lbs.

Legend:

(1) Hex Head Screws (2)
(2) Cable Bracket
(3) W5 Cable
(4) W5J1 Connector
(5) Mounting Bracket
(6) W5P2 Connector
(7) Receptacle A4J1
(8) W5P1 Connector
(9) W5P3 Connector

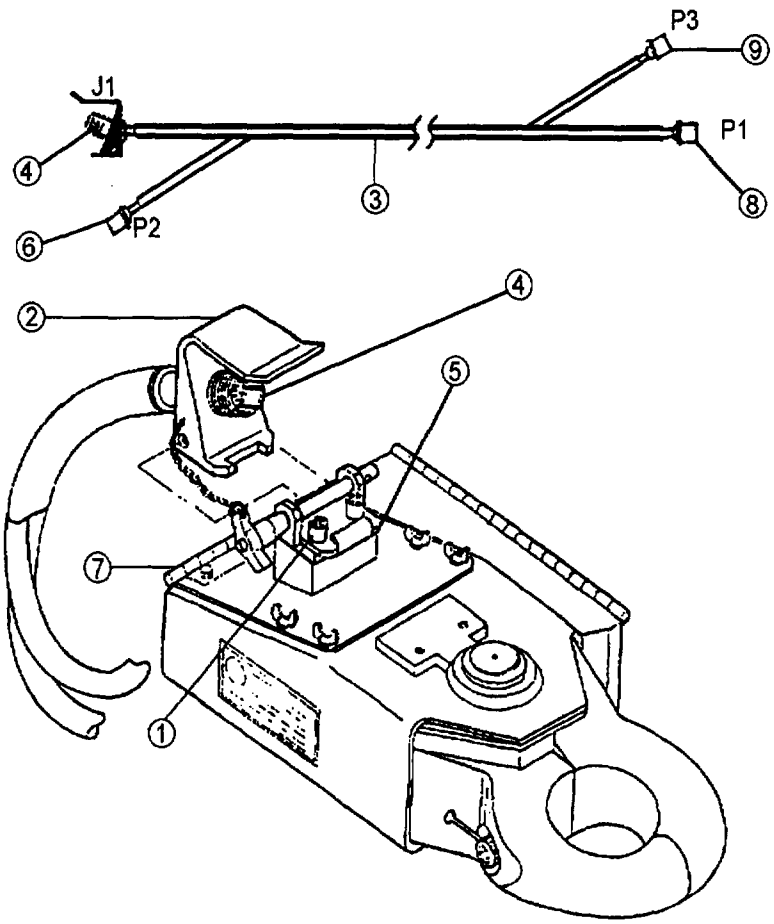

Figure 2.58. Remote Trailer Disconnect Device

(4) Using 7/16-inch wrench, remove two hex head screws (8) (see Figure 2.56) and lockwashers from access cover (3) and install and secure cable bracket (9) on access cover (3).

2.7.13 MOD 2/3 LAUNCHER ELECTRICAL CONNECTIONS **(ARMY ONLY)**

a. Initial Setup

· **References**

- TM 9-1300-206

b. Branched cable assembly W5

(1) Remove quick-release pin (1) (see Figure 2.59) from cable bracket assembly (2) located on W5 cable (3) J1 connector (4).

(2) Insert cable bracket (2) into mounting bracket (5) and insert quick-release pin (1).

(3) Remove connector cover from connector W5P2 (6).

(4) Remove receptacle cover from receptacle A4J1 (7) on trailer disconnect housing.

(5) Secure connector W5P2 (6) to receptacle A4J1 (7).

(6) Remove connector covers from W5P1 (8) and W5P3 (9) connectors.

Legend:

(1) Quick-Release Pin
(2) Cable Bracket
(3) W5 Cable
(4) W5J1 Connector
(5) Mounting Bracket
(6) W5P2 Connector
(7) Receptacle A4J1
(8) W5P1 Connector
(9) W5P3 Connector

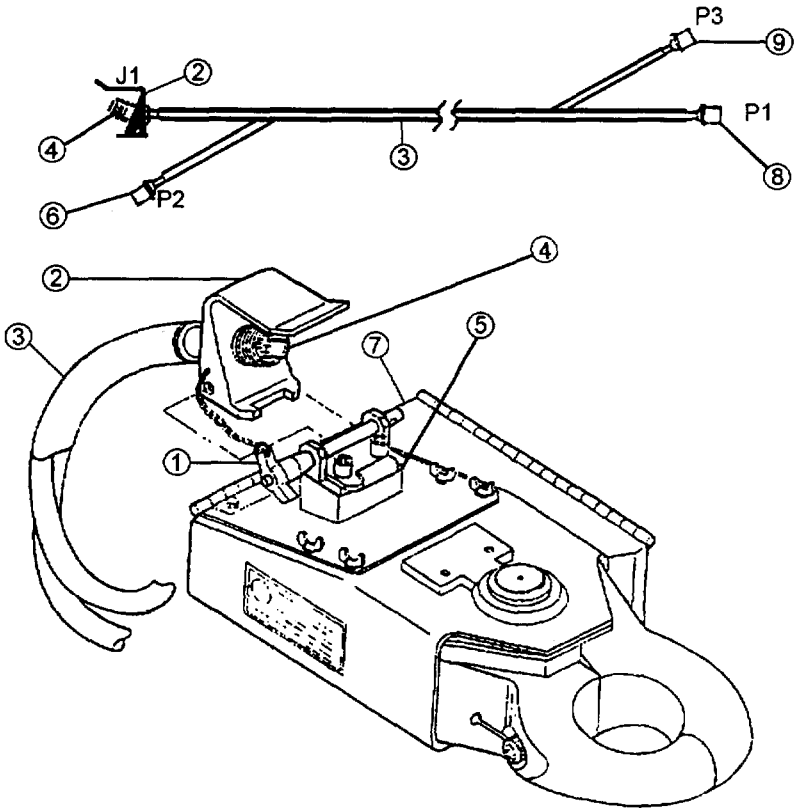

Figure 2.59. Install W5 Branched Cable Assembly

(7) Run W5P1 connector (1) (see Figure 2.60) to rear of launcher on left side of launcher to allow connection to safety switch (2), J1 receptacle. If cable does not fit in holders, tie in place.

(8) Remove protective cap from power receptacle No. 1 (3).

(9) Remove safety switch electrical connector from J1 (4) connector on safety switch (2).

(10) Secure safety switch electrical connector (4) to receptacle No. 1 (3).

(11) Secure connector W5P1 (1) from cable W5 (5) to safety switch connector J1 (6).

WARNING

KEEP LINEAR DEMOLITION CHARGE M1134 SERIES FUZE AND ROCKET MOTOR AWAY FROM SOURCES OF RADIO FREQUENCY (RF) ENERGY SUCH AS RADIO OR RADAR TRANSMITTERS. ALTHOUGH THE ELECTRO-EXPLOSIVE DEVICES IN THE FUZE AND MOTOR ARE BOTH WELL PROTECTED FROM RF ENERGY INITIATION, THERE IS NO ABSOLUTE PROTECTION. KEEP AT LEAST FIVE FEET (1.52M) BETWEEN A LOW POWER OPERATING TRANSMITTER (SUCH AS A WALKIE-TALKIE) AND THESE ITEMS. THE STANDARD RADIOS USED IN EXPECTED TOWING VEHICLES WILL PRESENT NO PROBLEMS AT THE DISTANCES THEY WILL NORMALLY BE FROM THE FUZE AND ROCKET MOTOR. FOR SAFE DISTANCES FROM HIGHER POWERED TRANSMITTERS, REFER TO TM 9-1300-206.

(12) Remove protective cap from receptacle A3J1 (6) on hydraulic assembly base plate.

(13) Ensure A3J1 Solenoid receptacle connector is clean. See para. 3.7.

(14) Secure connector W5P3 (7) of cable W5 (5) to receptacle A3J1 (6).

Legend:

(1) W5P1 Connector
(2) Safety Switch
(3) Receptacle No. 1
(4) J1 Connector
(5) W5 Cable
(6) A3J1 Receptacle
(7) W5P3 Connector
(8) W3P1 Connector
(9) W5J1 Connector
(10) Trailer Disconnect Device
(11) W3P2 Connector
(12) A1J2 Receptacle
(13) Selector Switch Assembly
(14) W6P2 Connector
(15) A1J1 Receptacle
(16) W6P1 NATO Connector
(17) W3 Cable
(18) W6 Cable
(19) A4J1 Receptacle
(20) W5P2 Connector

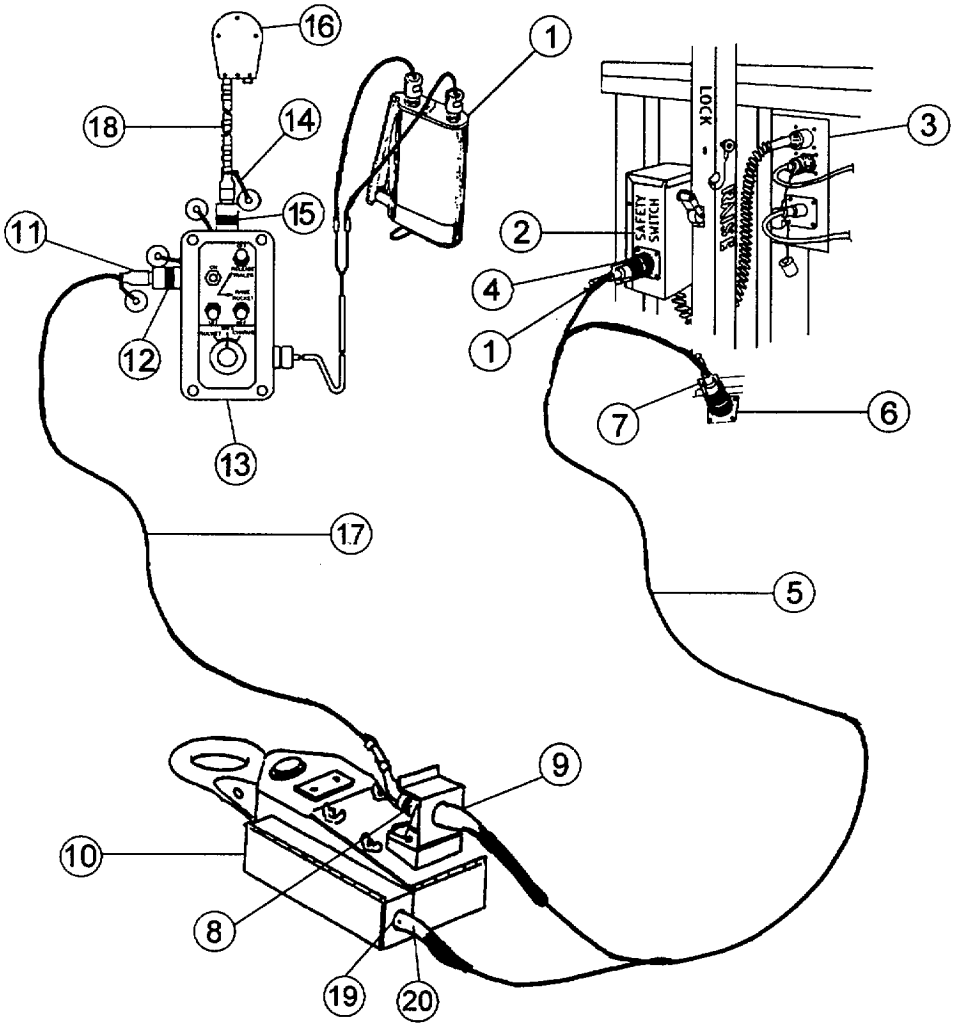

Figure 2.60. Connecting Cables to Linear Demolition Charge and Launcher

c. Sixty-foot Cable W3

(1) Remove protective cover from breakaway connector W3P1 (8) (see Figure 2.60).

(2) Connect W3P1 (8) to W5J1 (9) on trailer disconnect device (10).

(3) Remove protective cover from cable connector W3P2 (11).

(4) Remove protective cover from receptacle A1J2 (12) of the selector switch assembly (13).

(5) Connect W3P2 (11) to A1J2 (12).

d. Power Cable W6

(1) Remove protective cover from power cable connector W6P2 (14) (see Figure 2.60).

(2) Remove protective cover from receptacle A1J1 (15) on selector switch assembly (13).

(3) Connect W6P2 (14) to A1J1 (15).

(4) Connect NATO connector W6P1 (16) to power receptacle on tow vehicle.

2.7.14 MOD 2/3 LAUNCHER CONTINUITY CHECK **(ARMY ONLY)**

a. Initial Setup

· **Tools and Special Tools**

- M34 Blasting Machine
- M5 Crimping Tool (NSN 5120-00-029-0683)
- M51 Blasting Cap Test Set
- Shorting Plug(s)
- Shorting Wire

· **References**

- TM 9-2330-205-14&P
- TM 9-2330-247-14&P
- TM 9-2330-389-14&P

· **Equipment Condition**

- Trailer disconnect device and electrical cables installed.

b. Check Operation of M51 Blasting Cap Test Set and M34 Blasting Machine

(1) Remove M34 blasting machine and M51 blasting cap test set from storage container.

(2) To check M51 blasting cap test set (1) (see Figure 2.61) for proper functioning, attach a shorting wire (2) from one post (3) to the other and press handle (4). Lamp (5) will light on indicator if M51 is functioning properly. Light may be very dim. Secure tester handle (4) with safety clip (6).

NOTE

IF SHORTING WIRE IS NOT AVAILABLE, USE M5 CRIMPING TOOL TO SHORT THE POSTS.

Legend:

(1) M51 Blasting Cap Test Set
(2) Shorting Wire
(3) Electrical Posts
(4) Tester Handle
(5) Lamp
(6) Safety Clip

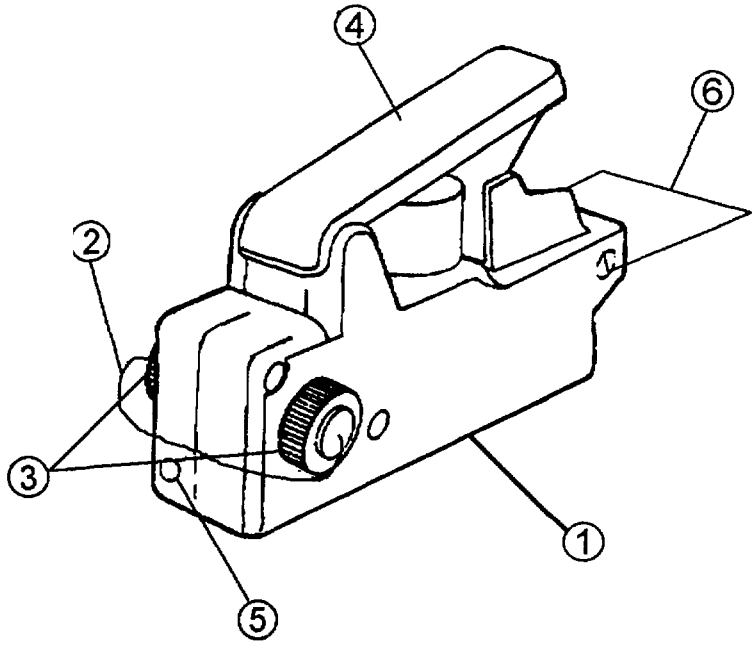

Figure 2.61. M51 Blasting Cap Test Set Check-out

NOTE

DO NOT ATTACH ANY ELECTRICAL WIRES TO THE M34 BLASTING MACHINE.

(3) Check the M34 blasting machine (1) (see Figure 2.62) by repeatedly squeezing the operating handle (2) until indicator lamp (3) lights. If lamp does not light, reject M34 blasting machine and obtain a replacement M34 blasting machine. Secure operating handle (2) with safety clip (4).

Legend:

(1) M34 Blasting Machine
(2) Operating Handle
(3) Indicator Lamp
(4) Safety Clip

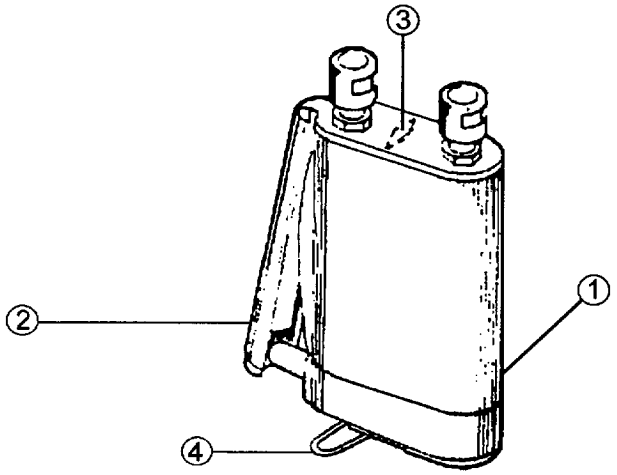

Figure 2.62. Operation of M34 Blasting Machine

c. Connect Electrical cable

(1) Ensure launcher rail is at approximately 5°.

CAUTION

WHEN CONNECTING CABLE NO. 3 TO THE SAFETY SWITCH OR THE SAFETY SWITCH OUTPUT CONNECTOR TO RECEPTACLE NO. 1 ON THE LINE CHARGE RECEPTACLE BOX, ENSURE THAT THE CONNECTION IS TIGHT. PUSH BACK AND FORTH ON THE BACK OF THE CABLE CONNECTOR. IF THE BACK OF THE CONNECTOR FEELS LOOSE, UNSCREW THE CONNECTOR, CLEAN THE THREADS, AND RECONNECT.

(2) Secure linear demolition charge lead (1) (see Figure 2.63) to receptacle No. 2 (2).

(3) Remove protective cap from receptacle No. 3 (3), bottom receptacle and connect shorting plug (4) from spare parts kit to receptacle. If spare parts kit contains second shorting plug, disconnect linear demolition charge lead from receptacle No. 2 and connect second shorting plug to this receptacle.

Legend:

(1) Linear Demo Charge Elect. Lead
(2) Receptacle No. 2
(3) Receptacle No. 3
(4) Shorting Plug

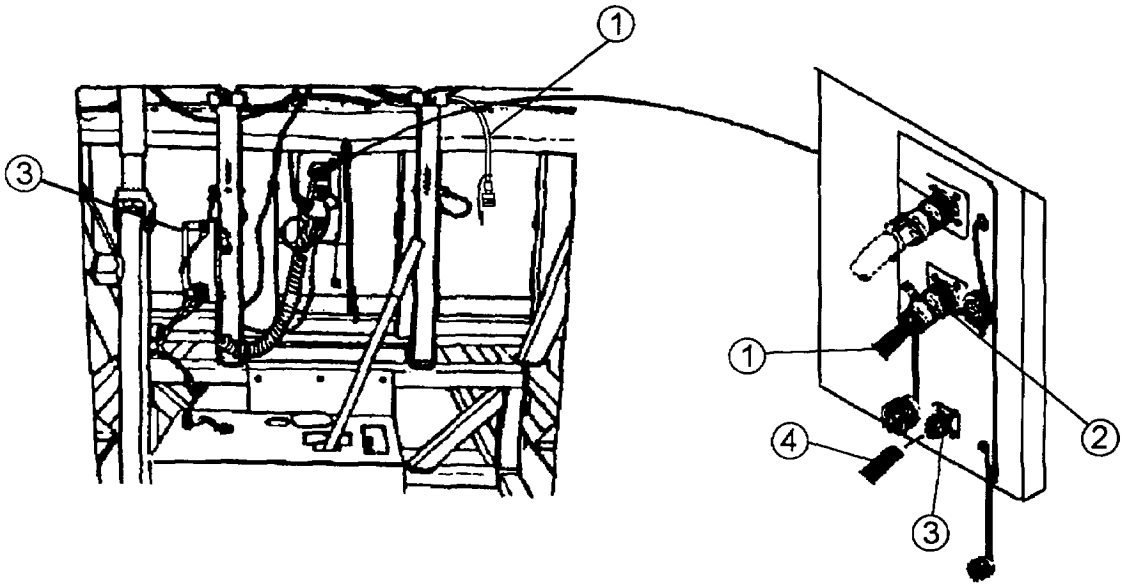

Figure 2.63. Electrical Connections for Line Charge and Launcher

(4) Attach cable assembly No. 2 (1) (see Figure 2.66) to M51 blasting cap test set (2).

NOTE

PULL UP TO MOVE SELECTOR SWITCH KNOB.

d. Check Electrical Circuits with Rail at 0° (Safety Switch Open (Rail Down) (see Figure 2.64))

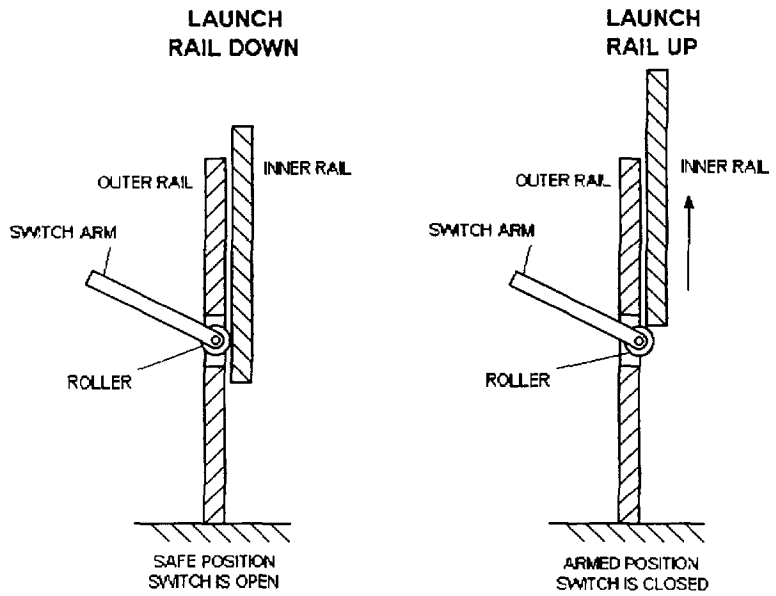

Figure 2.64. Safety Switch Open and Closed Positions

(1) Ensure selector switch knob (3) (see Figure 2.66) is in TEST/SAFE position.

(2) Operate M51 blasting cap test set (2). Test light SHOULD light, i.e. selector switch is closed in TEST/SAFE position.

(3) Set selector switch knob (3) to ROCKET position.

(4) Operate M51 blasting cap test set (2). Test light should NOT light, i.e. safety switch is open when rail is down.

(5) Set selector switch knob (3) to CHARGE position.

(6) Operate M51 blasting cap test set (2). Test light should NOT light, i.e. safety switch is open when rail is down.

e. Pressurize Accumulator to Remotely Raise Rail

(1) Insert ball-lock pins (4) (see Figure 2.66) in the RAISE (side) position in launcher rail supports (5). Engage detents (6) by pulling down on levers.

(2) Move hydraulic control valve lever (7) to PRESSURIZE ACCUMULATOR position.

(3) Move pump valve lever (8) to the HOLD position.

(4) Operate pump handle (9) until 3,200-3,500 psi is indicated on pressure gage (10).

Legend:

(1) Travel Lock
(2) LOCKED Position
(3) Disconnect Device
(4) Storage Position

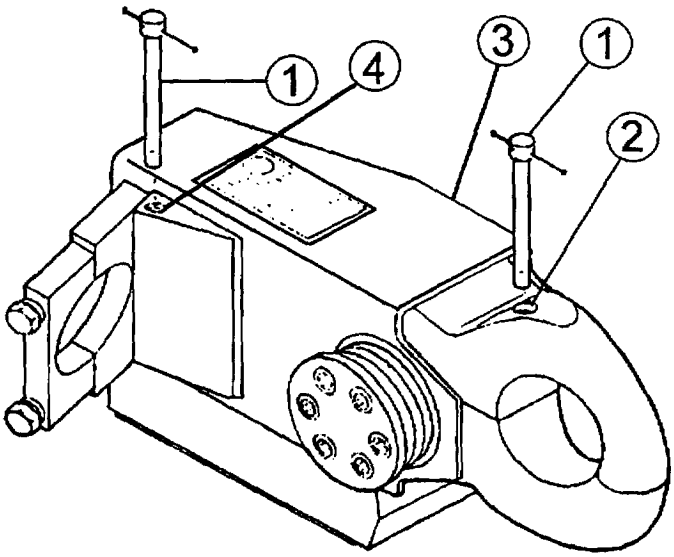

Figure 2.65. Remove Remote Trailer Device Travel Lock

(5) If trailer disconnect function is to be used, remove travel lock (1) (see Figure 2.65) from LOCKED position (2) in trailer disconnect device (3) by unscrewing. Screw lock-bolt in STORAGE position (4).

Legend:

(1) Cable Assembly No. 2 /P3/P4 Leads
(2) M51 Blasting Cap Test Set
(3) Selector Switch Knob
(4) Ball-lock Pins
(5) Launcher Supports
(6) Detents
(7) Hydraulic Control Valve Lever
(8) Pump Valve Lever
(9) Pump Handle
(10) Pressure Gage
(11) Power Toggle Switch
(12) On Lamp
(13) Rocket Toggle Switch

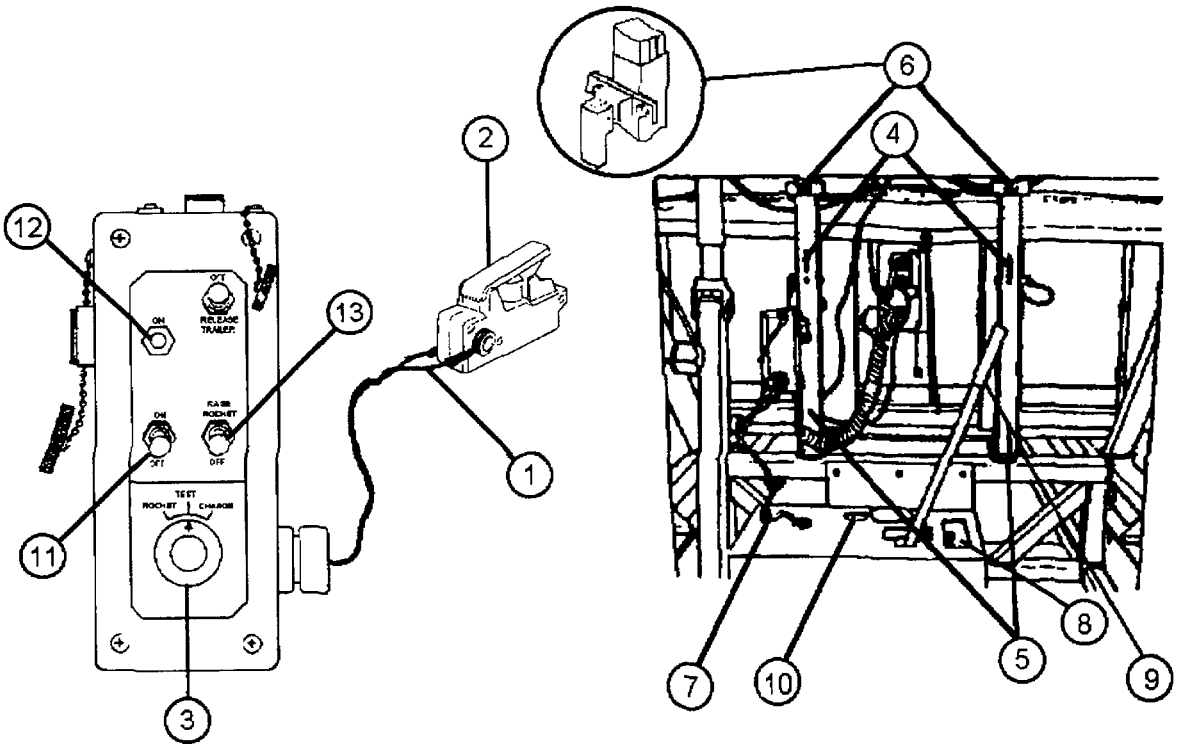

Figure 2.66. Testing Electrical Connections for MK 155 MOD 2/3 Launchers (Rail Down)

NOTE

THE RAISE ROCKET AND TRAILER DISCONNECT SYSTEMS WILL FUNCTION REGARDLESS OF THE POSITION OF SELECTOR SWITCH KNOB.

(6) Move vehicle power toggle switch (11) (see Figure 2.66) to ON position. On lamp (12) should light. If ON lamp does not light, refer to Troubleshooting in Chapter 3.

(7) To raise launcher rail, move RAISE ROCKET toggle switch (13) to RAISE ROCKET position and simultaneously move vehicle power toggle switch (11) to ON position, and hold until rail is fully raised to 45-47°.

f. Check Electrical Circuits with Safety Switch Closed (Rail Up)

(1) Set selector switch knob (1) (see Figure 2.67) to ROCKET position.

(2) Operate M51 blasting cap test set (2). Test light should light, i.e. safety switch is closed when rail is up.

(3) Set selector switch knob (1) to CHARGE position.

(4) Operate M51 blasting circuit test set (2). Test light should light, i.e. safety switch is closed when rail is up.

(5) Return selector switch knob (1) to TEST/SAFE position.

Legend:

(1) Selector Switch Knob
(2) M51 Blasting Cap Test Set
(3) Trailer Toggle Switch
(4) Power Toggle Switch
(5) Hydraulic Control Valve
(6) Detents
(7) Pump Valve Lever
(8) Launcher Rail

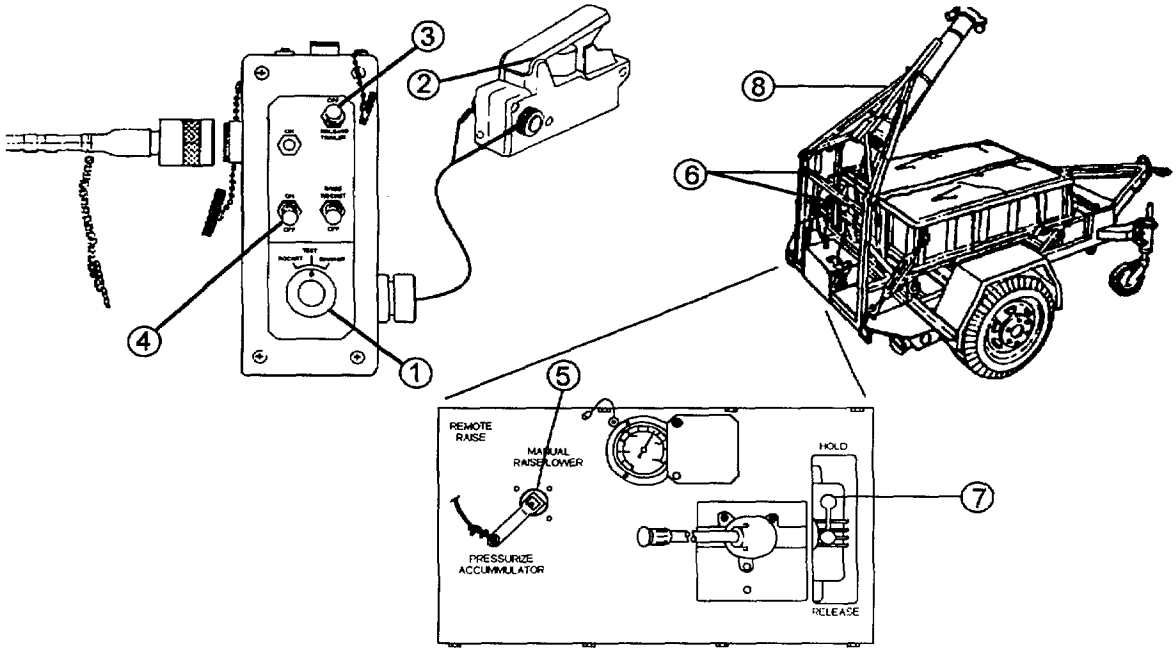

Figure 2.67. Testing Electrical Connections for MK 155 MOD 2/3 Launchers (Rail Up)

(6) The primary operator will keep the M34 blasting machine and M51 blasting cap test set.

(7) Roll up extra cable and place it with selector switch assembly (1) into tow vehicle.

(8) Return shorting plug(s) to primary operator.

(9) Secure rocket motor electrical lead to receptacle No. 3. If two shorting plugs were used, connect linear charge electrical lead to receptacle No. 2.

(10) Place selector switch assembly and W6/W3 cables in tow vehicle.

(11) If discrepancies exist, recheck connections and repeat above steps as necessary. If discrepancies still exist, disconnect safety switch electrical lead from receptacle No. 1 and replace protective cap. Disconnect line charge electrical lead from receptacle No. 2, disconnect rocket motor electrical lead from receptacle No. 3, and reinstall protective covers. Request assistance from unit maintenance.

CAUTION

WHEN TESTING THE OPERATION OF THE REMOTE TRAILER DISCONNECT DEVICE, ENSURE TRAILER IS NOT CONNECTED TO TOW VEHICLE.

g. Procedure to function the Remote Trailer Disconnect Device

(1) To activate trailer disconnect device, move RELEASE TRAILER toggle switch (3) (see Figure 2.67) to RELEASE TRAILER position and simultaneously move vehicle power toggle switch (4) to ON position. Trailer-jaws should open.

(2) Reset trailer disconnect device IAW paragraph 2.8.10.

(3) Return hydraulic control valve (5) to MANUAL/RAISE position. Release detents (6) by pushing up on levers. Move pump valve lever (7) slightly toward RELEASE TRAILER position and slowly lower launcher rail (8) until rocket rests on rocket packing. Push pump valve lever (7) to HOLD position. Rail is at 0°.

WARNING

DO NOT TOW MICLIC BEHIND AN M1 SERIES TANK. THE EXTREME HEAT OF THE TANK'S EXHAUST CAN IGNITE THE LINEAR DEMOLITION CHARGE OR ROCKET MOTOR.

NOTE

IT MAY BE NECESSARY TO INVERT TOWING LUNETTE OF THE M200A1 TRAILER TO KEEP TRAILER LEVEL WHEN ATTACHING TRAILER TO SOME VEHICLES (SEE STEP 2.7.12C). DO NOT INVERT THE LUNETTE ON M353 TRAILERS.

h. Attach Trailer to Towing Vehicle

(1) Attach trailer disconnect device (1) (see Figure 2.68) to towing vehicle pintle (2). Make sure trailer disconnect lock bolt is in storage position.

(2) Extend break-away connector (3) release cable (4) toward tow vehicle pintle (2). Wrap a minimum of two loops of release cable around pintle T-handle (5).

(3) Prior to deployment when the disconnect device (1) is to be used, ensure that the safety chains (6), air hoses (7), and electrical connectors (8) are NOT connected to tow vehicle. Connect the safety chains, hoses and electrical connections, as applicable, in all other situations. Refer to TM 9-2330-247-14&P (for M353 Trailer), TM 9-2330-205-14&P (for M200A1 Wheeled Trailer), and TM 9-2330-389-14&P (for M200A1 Tracked Trailer).

Legend:

(1) Disconnect Device
(2) Vehicle Pintle
(3) Break-away Connector
(4) Release Cable
(5) Pintle T-handle
(6) Safety Chains
(7) Air Hoses
(8) Electrical Connectors

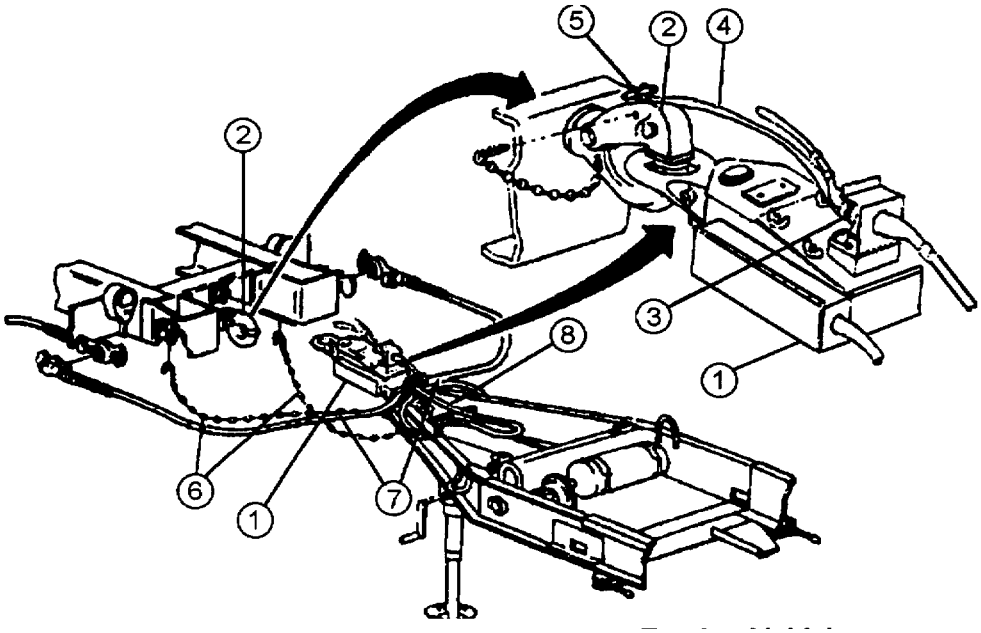

Figure 2.68. Connecting Trailer to Towing Vehicle

(4) Ensure trailer is connected to designated towing vehicle. Refer to TM 9-2330-247-14&P or TM 9-2330-205-14&P.

WARNING

- **CONNECTING BLASTING MACHINE TO SELECTOR SWITCH ASSEMBLY IS THE LAST OPERATION BEFORE FIRING. TO AVOID PREMATURE CONNECTION AND FIRING, THE PRIMARY OPERATOR WILL HAVE POSSESSION OF THE BLASTING MACHINE AT ALL TIMES.**

- **MICLIC MUST NOT BE TOWED BEHIND AN M1 TANK. THE EXTREME HEAT OF THE M1 TANK'S EXHAUST CAN IGNITE THE MK 22 ROCKET, M58 AND M68 LINE CHARGES THAT ARE CARRIED ON THE MICLIC.**

(5) If the trailer disconnect is to be used, ensure travel lock pin (1) is in storage position (2) (See Figure 2.69).

Legend:

(1) Travel Lock Pin
(2) Storage Position

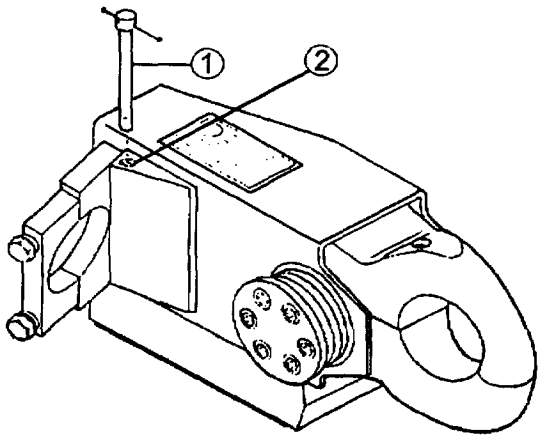

Figure 2.69. Unlocked Position of the Trailer Disconnect Device

2.7.15 SECURE TEST EQUIPMENT AND LAUNCHER RAIL AND ROCKET

a. Disengage detents by pushing up on detent levers.

b. Move pump valve lever slightly toward **RELEASE** position and slowly lower launcher rail until rocket just touches nylon cover/packing. Move pump valve lever to **HOLD** position.

c. The primary operator will keep the M34 blasting machine and M51 blasting cap test set under control as a safety procedure. Return M51 blasting cap test set to storage container.

d. Roll up extra cable and place it with selector switch assembly into the storage container.

e. Disconnect shorting plugs from receptacles and retain. Replace protective cap on receptacle No. 3. Install linear demolition charge electrical lead connector to receptacle No. 2.

f. Return shorting plug(s) to storage container and secure lid.

g. Secure launch rail and rocket down with four bungee straps (provided for container cover) by hooking bungee strap on one side of trailer, go over rail and hook bungee strap to other side of trailer. Remove bungee straps before remotely raising launcher rail.

2.7.16 MOD 2/3 FINAL PREPARATION FOR DEPLOYMENT **(ARMY ONLY)**

a. Initial Setup

· **Tools and Special Tools**

- M34 Blasting Machine
- M51 Blasting Cap Test Set

· **General Safety Instructions**

- See cautions and warnings at front of this manual.

WARNING

CONNECTING THE M34 BLASTING MACHINE TO THE SELECTOR SWITCH ASSEMBLY ALLOWS A PATH FOR STRAY VOLTAGE TO REACH THE ROCKET MOTOR. THE M34 SHOULD NOT BE CONNECTED TO THE SELECTOR SWITCH ASSEMBLY UNTIL REACHING THE BREECH POSITION AND THE LAUNCHER RAIL IS RAISED TO THE FIRING POSITION AND YOU ARE READY TO FIRE. THE PRIMARY OPERATOR WILL KEEP THE M34 BLASTING MACHINE UNDER CONTROL AT ALL TIMES.

NOTE

PERFORM THESE STEPS AS CLOSE TO THE BREECH POINT AS PRACTICAL.

b. Final Preparation for MOD 2/3 Deployment

WARNING

FAILURE TO INSERT THE PIN COMPLETELY INTO THE THRUST NEUTRALIZATION PLUG MAY RESULT IN THE ROCKET MOTOR BURNING ON THE RAIL OR PARTIAL DEPLOYMENT OF THE LINEAR CHARGE. THE QUICK RELEASE PIN FOR THE MOD 4 ROCKET MOTOR IS INSERTED IN THE FRONT OF THE ROCKET. PIN MUST BE INSERTED; YOUR LIFE MAY DEPEND ON IT.

CAUTION

- **FAILURE TO ENGAGE THE DETENTS WILL RESULT IN THE RAIL RAISING PAST THE 45-47° FIRING ANGLE. THE ROCKET MUST NOT BE LAUNCHED AT A HIGH ANGLE OF ELEVATION OR RESULTS MAY BE CATASTROPHIC. YOUR LIFE MAY DEPEND ON ENGAGING THE DETENTS. BALL-LOCK PINS MUST BE IN RAISE POSITION OR RAIL/ROCKET WILL NOT RAISE.**

- **BALL-LOCK PINS MUST BE IN RAISE POSITION OR RAIL/ROCKET WILL NOT RAISE. FAILURE TO RAISE ROCKET WOULD REQUIRE PERSONNEL TO LEAVE PROTECTED POSITION/ARMORED VEHICLE AND REPOSITIONED BALL-LOCK PINS TO RAISE POSITION.**

(1) Remove protective caps from rocket motor's electrical lead and receptacle No. 3.

(2) Secure rocket motor's lead to receptacle No. 3.

(3) Insert quick-release pin (3) (see Figure 2.70) into thrust neutralization plug of rocket motor.

(4) Engage detents (4) by pulling down on levers. Ensure that ball-lock pins (5) are in RAISE position.

(5) Move hydraulic control valve lever (6) to PRESSURIZE ACCUMULATOR position.

(6) Operate pump handle (7) until 3,200-3,500 psi is indicated on pressure gage (8).

Legend:

(1) Rocket Lead
(2) Receptacle No. 3
(3) Quick-Release Pin
(4) Detents
(5) Ball-lock Pin
(6) Control Valve Lever
(7) Hydraulic Pump Handle
(8) Pressure Gage

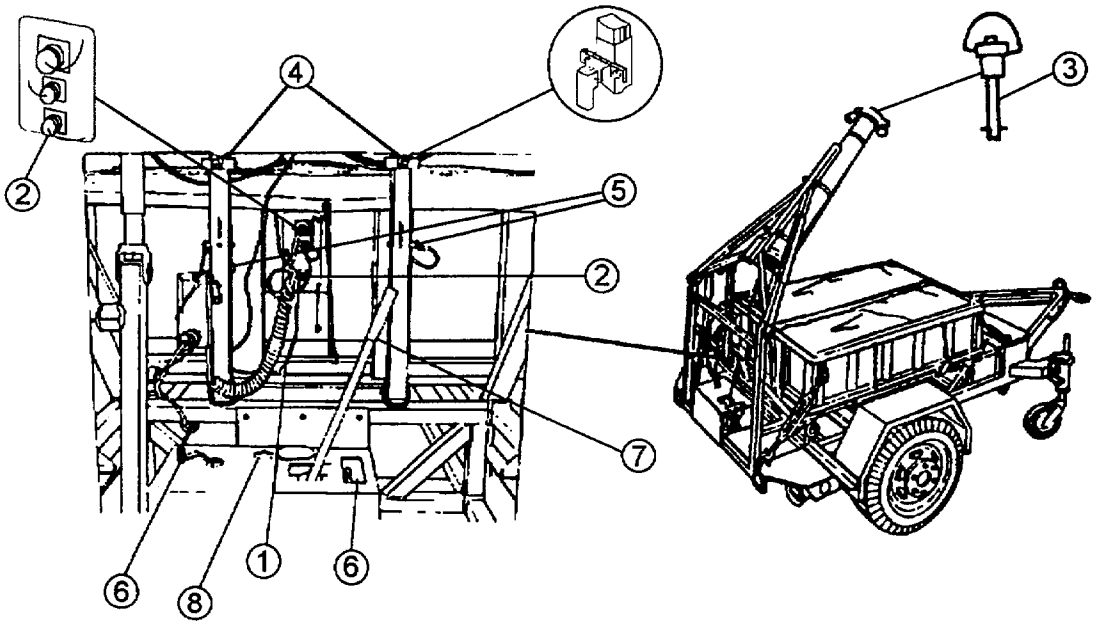

Figure 2.70. Preparing MK 155 MOD 2/3 Launchers for Deployment

WARNING

- **WHEN THE TRAILER IS TOWED BY A VEHICLE NOT EQUIPPED WITH A TRAILER BRAKE INTERCONNECTION, RESTRICT OPERATION TO NON-PUBLIC AREAS (UNDER DOT REGULATIONS) AND VEHICLE TO THE FOLLOWING SPEEDS:**

0 to 5 MPH	**ROUGH BROKEN TERRAIN**
0 to 10 MPH	**FLAT ROUGH TERRAIN**
0 to 15 MPH	**OFF-ROAD, SMOOTH TERRAIN**
0 to 25 MPH	**SECONDARY ROADS**

- **DO NOT MAKE SHARP TURNS WHEN TOWING THE TRAILER WITH TRACKED VEHICLES. THIS CAN CAUSE THE TRAILER TO OVERTURN AND BE DAMAGED FROM CONTACT WITH TOWING VEHICLE'S TRACKS. THE VEHICLE COMMANDER SHOULD KEEP THE TRAILER AND ITS CONTENTS UNDER CLOSE SCRUTINY DURING SUCH TOWING.**

CAUTION

TRANSPORT FULLY ASSEMBLED ROCKET AND LINEAR DEMOLITION CHARGE SLOWLY ACROSS ROUGH TERRAIN OR MICLIC MAY FAIL TO FUNCTION PROPERLY AT BREECH POINT.

NOTE

LIMIT TOWING THE LAUNCHER WITH THE ROCKET MOTOR ON THE LAUNCHER RAIL AS MUCH AS POSSIBLE, ESPECIALLY OFF-ROAD. TRY TO ESTABLISH YOUR LOADING/INSPECTION POINT AS CLOSE AS PRACTICAL TO THE AREA WHERE THE MICLIC WILL BE LAUNCHED. USE ROCKET PACKING TO CUSHION ROCKET MOTOR DURING TRANSPORTATION AND SECURE FRONT OF RAIL WITH BUNGEE STRAPS IF DISTANCE IS LONG. ENSURE BALL-LOCK PINS ARE IN THE RAISE POSITION AND BUNGEE STRAPS ARE REMOVED BEFORE FINAL DEPLOYMENT AREA IS REACHED.

(7) Perform final system checks at closest "safe" area.

(8) Orient the tow vehicle and launcher at 90° angle to breach point. Stop 200 feet (61 m) from edge of the breach point.

2.8 OPERATING PROCEDURES

2.8.1 PREFIRE CHECKING PROCEDURES

WARNING

- **PERSONNEL WILL TAKE COVER WHEN ROCKET MOTOR IS LAUNCHED.**
- **ALL OPERATING AND CREW PERSONNEL MUST WEAR HEARING PROTECTION WHEN FIRING ROCKET MOTOR AND/OR LINEAR DEMOLITION CHARGE.**
- **WHEN LAUNCHING PREVIOUSLY FIRED M68, INERT RUBBER BLOCKS MAY COME LOOSE FROM CHARGE WHEN DEPLOYED AND TRAVEL SEVERAL HUNDRED FEET. PERSONNEL SHOULD STAY UNDER COVER FOR ONE MINUTE AFTER INERT CHARGE HAS HIT THE GROUND.**
- **DO NOT LAUNCH INERT CHARGE MORE THAN THREE TIMES. IF CABLE OR LINEAR DEMOLITION CHARGE FAILS DURING LAUNCH, THE ROCKET COULD FLY FREE AND INJURE PERSONNEL.**

a. Mods 0/1 and 2/3 Prefire Checks

(1) Ensure ball-lock pins are in the raise (side) position.

(2) Unfasten bungee straps placed across head cap of rocket motor and rocket motor packing. Put bungee straps in the launcher storage box or in the towing vehicle. After firing, place the bungee straps in the launcher equipment container.

(3) Peel back the nylon cover from the center of the linear demolition charge. Allow the cover to hang freely at the sides (lengthwise) of the container. Do not let the soft cover become entangled with the rocket bridle cable or electrical leads.

NOTE

TRANSPORTING THE MICLIC OVER ROUGH TERRAIN, MAY CAUSE THE LINEAR DEMOLITION CHARGE TO SHIFT FORWARD IN THE CONTAINER AND CAUSE THE BOTTOM HALF OF FUZE TO BE PULLED FROM THE FUZE HOLDER.

(4) Check that the fuze has not pulled from the fuze holder. If possible, push the fuze back into the fuze holder.

(5) Check that the rocket bridle cable is laying on top of the linear demolition charge and will not snag on the container or launch rail during deployment.

(6) Check that the quick release pin (MOD 4) or retainer screw (MOD 3) is inserted in the rocket motor thrust neutralization plug.

(7) Check that the launcher pressure gage is reading 3,200-3,500 psi.

(8) Check the linear demolition charge junction box to ensure all electrical connectors are secured to the receptacles.

2.8.2 SURFACE DANGER ZONES FOR M58 AND M68

a. The launching of the rocket motor or detonation of the linear charge presents the situation for personal injury to operating personnel and nearby observers. Noise and fragmentation safety hazards must be considered.

(1) Noise hazard from launching the rocket and detonation of the linear charge, Figures 2.71 and 2.72 address hearing and fragmentation zones for the M58. Figure 2.73 shows hearing protection zones for the M68 training charge. Hearing protection must be worn in the zones indicated in Figures 2.71, 2.72 and 2.73.

(2) Fragmentation hazard from the M58 is very significant. Fragmentation zones in Figures 2.71 and 2.72 must be observed. Rubber blocks can be a flying hazard with the M68 training charge; especially after the first launch. Protect personnel with buttoned-up vehicles or adequate cover at a safe distance.

(3) Noise and fragmentation hazards can result from accidental explosion of the rocket motor or a burning linear charge that detonates. Figures 2.71, 2.72 and 2.73 should be studied and learned before field operations are performed.

SURFACE DANGER ZONE
FOR FIRING THE MINE CLEARING LINE CHARGE (MICLIC)
WITH THE M58, HIGH EXPLOSIVE CHARGE

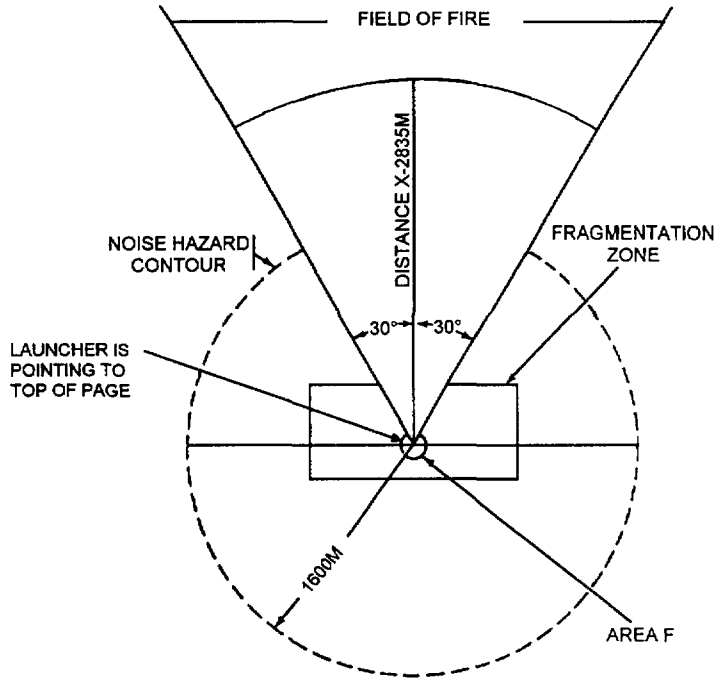

NOT TO SCALE LAUNCH ANGLE 47° ± 2°

Figure 2.71. Surface Danger Zone for M58 Line Charge

WARNING

- **FIRING PERSONNEL WITHIN AREA F (SEE FIGURE 2.71 AND 2.72) SHALL BE IN A PROTECTED POSITION OR ARMORED VEHICLE (M60 OR M113 OR OTHER ARMORED VEHICLES) IN BUTTON-UP MODE WITH SINGLE HEARING PROTECTION DURING FIRING.**

- **SPECTATORS WITHOUT HEARING PROTECTION SHALL NOT BE ALLOWED WITHIN THE MICLIC SURFACE DANGER ZONE OR NOISE HAZARD CONTOUR DURING FIRING. SPECTATORS WITH HEARING PROTECTION MUST BE AT LEAST 1,000 METERS TO THE REAR OF THE BLAST AREA.**

AREA F AND FRAGMENTATION ZONE (IN DETAIL)
FOR FIRING THE MINE CLEARING LINE CHARGE
WITH THE M58, HIGH EXPLOSIVE CHARGE

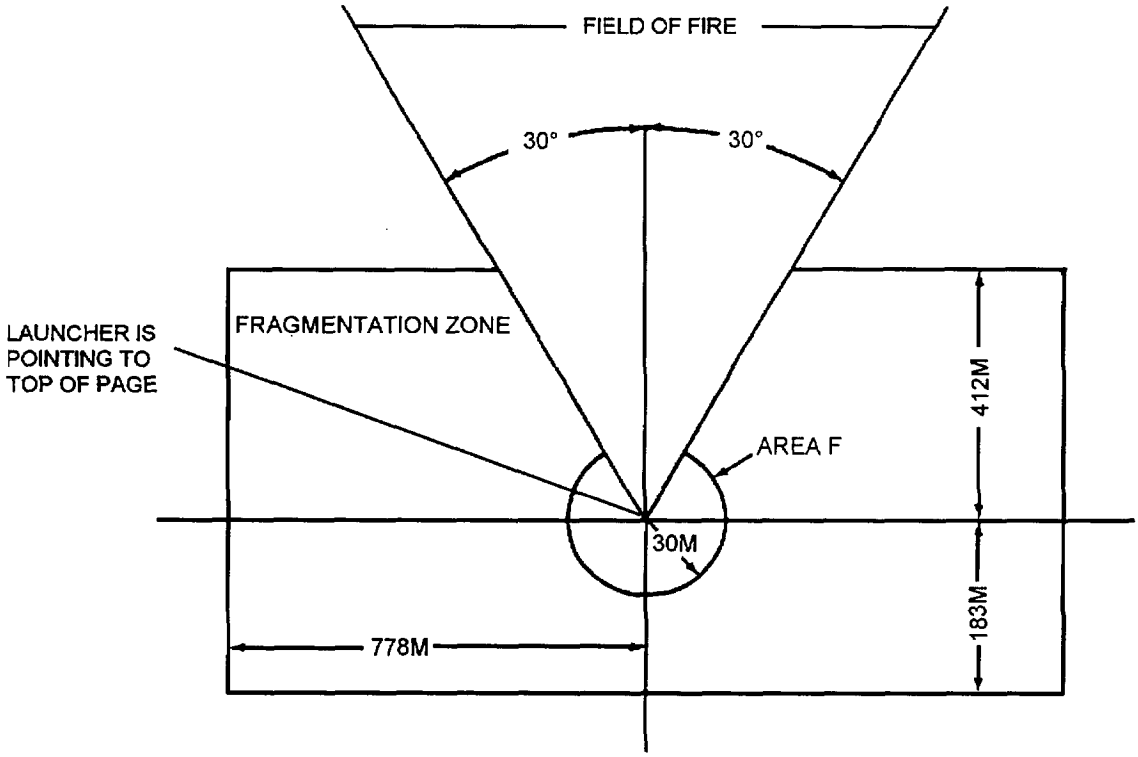

Figure 2.72. Area F and Fragmentation Zone for M58 Linear Demolition Charge

SURFACE DANGER ZONE
FOR FIRING THE MINE CLEARING LINE CHARGE (MICLIC)
WITH THE M68, INERT CHARGE

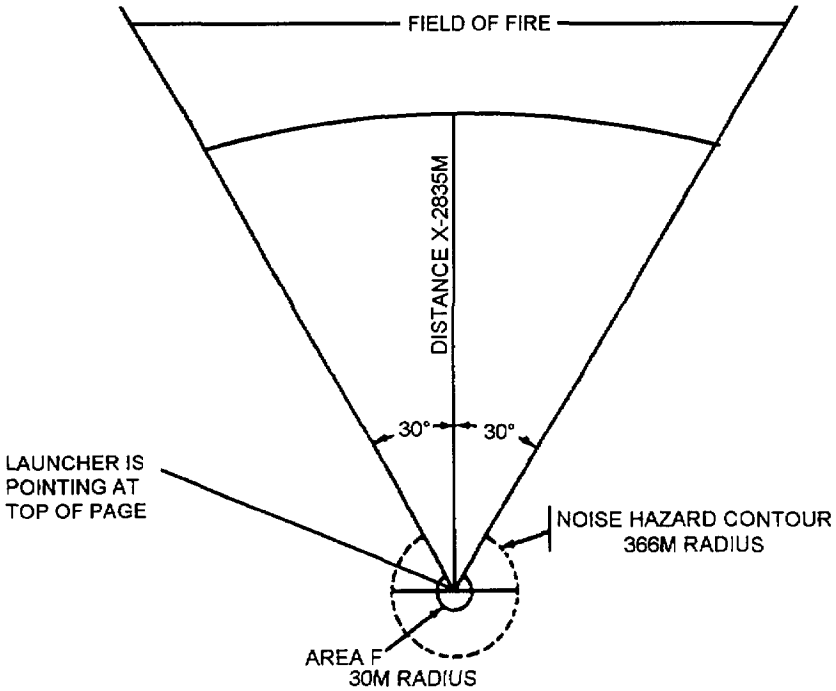

LAUNCH ANGLE 47° ± 2°

NOT TO SCALE

Figure 2.73. Surface Danger Zone for M68 Training Charge

WARNING

- **FIRING PERSONNEL WITHIN AREA F (FIGURES 2.71, 2.72 AND 2.73) SHALL BE IN A PROTECTED POSITION OR ARMORED VEHICLE IN A BUTTONED-UP MODE WITH SINGLE HEARING PROTECTION DURING FIRING.**

- **SPECTATORS SHALL NOT BE ALLOWED WITHIN THE MICLIC SURFACE DANGER ZONE OR NOISE HAZARD CONTOUR DURING FIRING.**

- **SPECTATORS WITHOUT HEARING PROTECTION SHALL NOT BE ALLOWED WITHIN THE MICLIC SURFACE DANGER ZONE OR NOISE HAZARD CONTOUR DURING FIRING. SPECTATORS WITH HEARING PROTECTION MUST BE AT LEAST 1,000 METERS TO THE REAR OF THE BLAST AREA.**

2.8.3 FIRING MOD 0/1 LAUNCHER FROM AN ARMORED TOW VEHICLE

a. Initial Setup

· **Tools and Special Tools**

- M34 Blasting Machine

· **References**

- FM 20-32
- Surface Danger Zones Figures 2.71, 2.72 and 2.73.

· **General Safety Instructions**

- See warnings that follow.

WARNING

· **TO PREVENT LAUNCH AT IMPROPER ANGLE, DO NOT ATTEMPT TO LAUNCH ROCKET IN EXTREMELY UNEVEN TERRAIN.**

· **TO AVOID INJURY, DO NOT ALLOW UNNECESSARY PERSONNEL IN THE DANGER ZONES.**

NOTE

LINE CHARGE OPERATOR MUST NOTIFY PERSONNEL INSIDE THE HOST VEHICLE BY ISSUING WARNING COMMANDS OF ACTIONS/OPERATING PROCEDURES ABOUT TO BE PERFORMED. THIS ENSURES THAT ALL PERSONNEL ARE UNDER COVER AND KNOW WHAT TO EXPECT IN THE DEPLOYMENT CYCLE. SUGGESTED COMMANDS ARE PROVIDED IN BOLD LETTERS AFTER THE ASSOCIATED ACTION THAT FOLLOWS.

(1) Perform final system checks at closest "safe" area.

(2) Orient the tow vehicle and launcher at 90° angle to breach point. Stop 200 feet (61 m) from edge of the breach point.

b. Raise Rocket Motor

(1) Move selector switch knob to OFF position.

(2) Observe danger zones, 2.71, 2.72 and 2.73

(3) Take up slack in lanyard (1) (see Figure 2.74).

(4) Pull lanyard to raise launcher rail (2). **(RAISE ROCKET MOTOR).**

(5) Allow a minimum of 10 seconds for launcher rail to reach launch angle.

(6) Visually check to ensure rocket motor (3) is elevated. Your life may depend on it. If possible check for the proper firing angle which is indicated when white marks on launcher rail supports (4) (ARMY ONLY) are visible from MICLIC towing vehicle.

Legend:

(1) Lanyard
(2) Launcher Rail
(3) Rocket Motor
(4) Launcher Supports

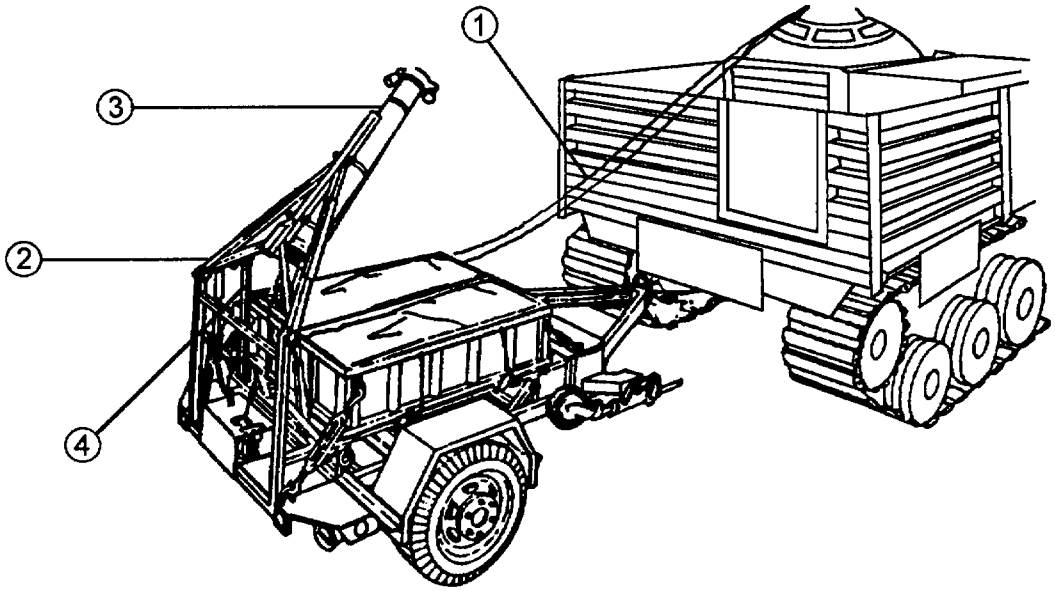

Figure 2.74. Firing Arrangement for Armored Vehicle and MICLIC

c. Launch Rocket Motor

(1) Attach a functioning M34 blasting machine to the connecting leads of cable No. 2 on selector switch box. **(M34 CONNECTED).**

(2) Lift and rotate selector switch knob to ROCKET position.

(3) To launch rocket, repeatedly squeeze M34 blasting machine handle. Rocket should launch. **(ROCKET INITIATED).**

(4) Wait approximately 10 seconds for completion of linear demolition charge deployment.

WARNING

WHEN LAUNCHING THE M58 HE LINEAR DEMOLITION CHARGE, IF THE ROCKET MOTOR INITIATES/FIRES BUT FAILS TO LAUNCH FROM THE RAIL, QUICKLY DISENGAGE THE TRAILER FROM THE TOW VEHICLE. EVACUATE THE AREA TO A SAFE DISTANCE (3,280 FEET MINIMUM)(1,000 Mi. IF THE LINEAR CHARGE IS ON FIRE, ALLOW CHARGE TO BURN OUT COMPLETELY BEFORE PERSONNEL APPROACH. IF LAUNCHING AN M58 HE LINEAR DEMOLITION CHARGE FROM THE AVLM AND ROCKET MOTOR BURNS ON THE RAIL, THEN EVACUATE THE VEHICLE TO A SAFE DISTANCE (3,280 FEET MINIMUM) (1,000 M).

(5) Visually verify that explosive section of linear demolition charge (1) (see Figure 2.75) is a safe distance (205 feet) (62.5 m) in front of vehicle. If explosive section is deployed on top of vehicle or closer than 205 feet (62.5 m), immediately disconnect M34 blasting machine from selector switch assembly. Evacuate from the vehicle to a safe distance (3,280 feet)(1,000 m). Fuze may be armed and is susceptible to initiation from static electricity. Contact EOD for disposal of linear demolition charge.

(6) If rocket motor falls to launch, set selector switch to OFF and check cable connections to selector switch box.

(7) Set selector switch knob back to ROCKET position and attempt to launch again. **(ROCKET RE-INITIATED)**

(8) If rocket fails to deploy again, set selector switch knob to OFF, disconnect M34 from selector switch box. Refer to misfire procedures in paragraph 2.8.7. **(ROCKET MISFIRE)**

Legend:

(1) Linear Demolition Charge

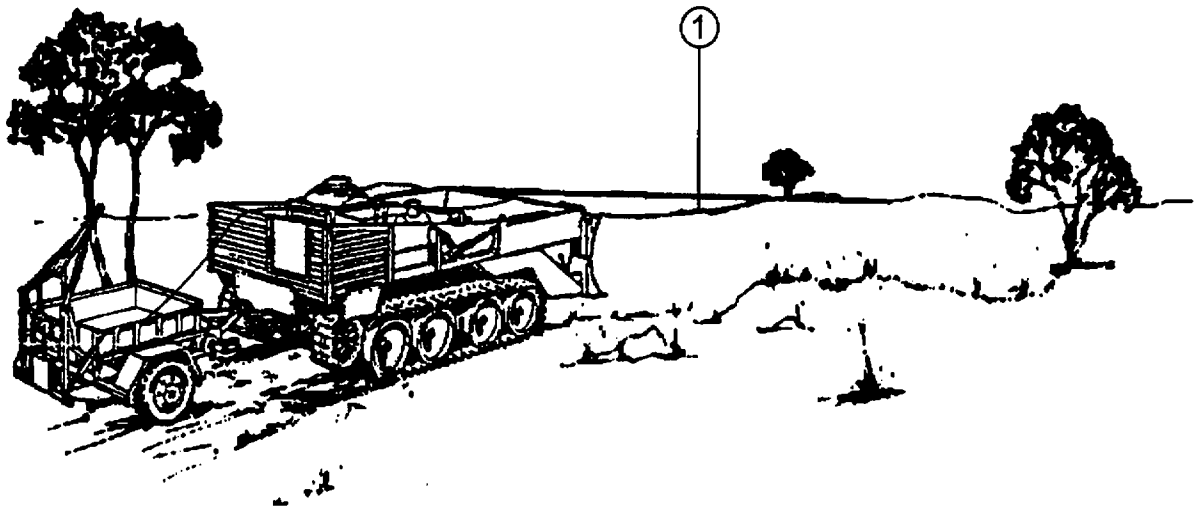

Figure 2.75. Visually Check how Line Charge is Deployed

d. Detonate Linear Line Charge

(1) Set selector switch knob (1) (see Figure 2.76) to CHARGE position.

(2) Operate M34 blasting machine (2) repeatedly to detonate the M58 linear demolition charge. **(LINEAR CHARGE INITIATED)**

WARNING

ALLOW A ONE MINUTE FALLOUT PERIOD FOR FALLING FRAGMENTS PRIOR TO ADVANCING TROOPS, VEHICLES OR TANKS THROUGH THE CLEARED AREA.

(3) After detonation occurs, wait 1-minute fallout period. Proofing of lane should be done IAW FM 20-32.

e. Linear Charge Misfire Procedures

(1) If linear demolition charge fails to detonate, check M34 blasting machine (2) connections, set selector switch knob (1) to OFF and back to CHARGE position, and repeat step d(l) through d(3). **(LINEAR CHARGE RE-INITIATED)**

(2) If linear charge fails again, set selector switch knob (1) to OFF position, and disconnect M34 blasting machine from cable No. 2 (4). Refer to misfire procedures, para. 2.8.8. **(LINEAR CHARGE MISFIRE)**

Legend:

(1) Selector Switch Knob
(2) M34 Blasting Machine
(3) Selector Switch Box
(4) Cable No. 2
(5) Lanyard

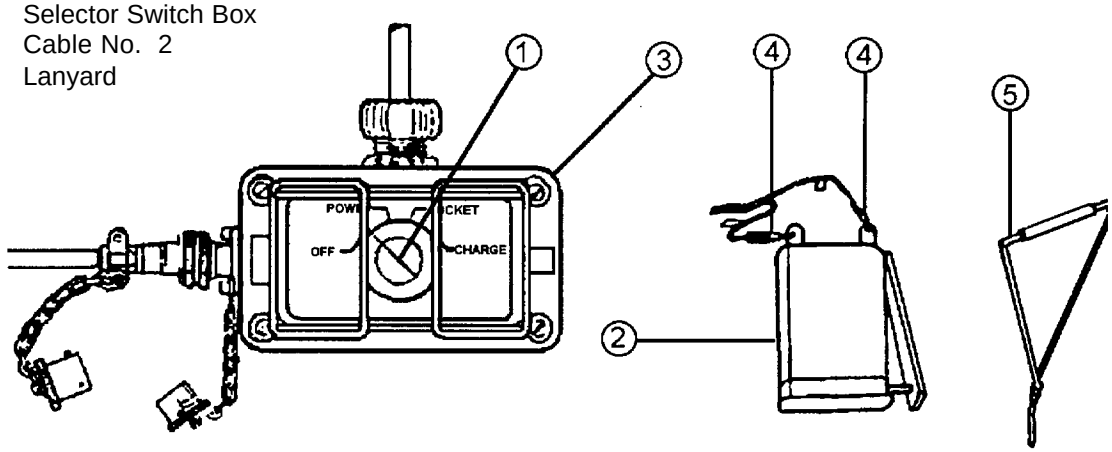

Figure 2.76. Components to Fire Rocket and Linear Demolition Charge

f. Secure Equipment

(1) If deployed linear charge was an M68 linear demolition charge (inert), refer to paragraph 2.8.11 for recovery of linear charge prior to going back to transfer point.

(2) Disconnect cable No. 2 leads (4)(see Figure 2.76) from M34 blasting machine (2).

(3) Return M34 blasting machine (2), selector switch box (3) and lanyard (5) to storage container as soon as possible.

2.8.4 FIRING MOD 0/1 LAUNCHER FROM OTHER THAN ARMORED TOW VEHICLE

NOTE

USE THIS PROCEDURE ONLY WHEN LAUNCHING THE M68 INERT LINEAR DEMOLITION CHARGE OR IN AN EMERGENCY COMBAT SITUATION.

a. Initial Setup

· **Tools**

- M34 Blasting Machine

· **References**

- FM 20-32
- Surface Danger Zones, Figures 2.71, 2.72 and 2.73.

· **General Safety Instructions**

- See cautions and warnings at front of this manual.

WARNING

· **IF THE MK 22 ROCKET MOTOR INITIATES/FIRES AND FAILS TO LEAVE THE LAUNCH RAIL, DISCONNECT THE MICLIC SYSTEM FROM THE TOWING VEHICLE AND EVACUATE THE AREA. A BURNING ROCKET MOTOR CAN CATCH THE M58 LINEAR DEMOLITION CHARGE ON FIRE. A BURNING M58 LINEAR DEMOLITION CHARGE CAN DETONATE.**

· **DO NOT APPROACH A BURNING M58 LINEAR DEMOLITION CHARGE OR ATTEMPT TO EXTINGUISH THE FIRE. A BURNING LINEAR DEMOLITION CHARGE CAN DETONATE.**

· **LAUNCH OF THE M58 LINEAR DEMOLITION CHARGE BY PERSONNEL OUTSIDE OF AN ARMORED VEHICLE IS PROHIBITED. THE LINEAR CHARGE IS SUSCEPTIBLE TO STATIC ELECTRICITY AND CAN PREMATURELY DETONATE IN THE AIR. PREMATURE DETONATION WILL ONLY OCCUR WHEN THE ARRESTING CABLE IS FULLY EXTENDED AND PRESENTS NO DANGER TO PERSONNEL IN A "BUTTONED-UP" ARMORED VEHICLE.**

· **DO NOT TOW MICLIC BEHIND AN M1 SERIES TANK. THE EXTREME HEAT OF THE TANK'S EXHAUST CAN IGNITE THE LINEAR DEMOLITION CHARGE OR ROCKET MOTOR.**

WARNING

- **LAUNCHING THE ROCKET MOTOR AT THE WRONG ANGLE CAN HAVE SERIOUS TO DEADLY CONSEQUENCES. MAKE SURE THAT WHITE MARKS ON INNER RAIL SUPPORTS ARE VISIBLE BUT HAVE NOT RISEN HIGH ENOUGH FOR THE VERTICAL WHITE MARKS (T-STRIPES) TO BE SEEN ABOVE THE OUTER LOWER LAUNCH RAIL SUPPORTS (ARMY ONLY). BOTH TOO LOW AND TOO HIGH LAUNCH ANGLES ARE DANGEROUS.**

- **DO NOT ATTEMPT TO BYPASS THE SAFETY SWITCH. DO NOT CONNECT CABLE ASSEMBLY NO. 3 TO RECEPTACLE NO. 1 ON THE CONTAINER.**

- **ALLOW A ONE MINUTE FALLOUT PERIOD FOR FALLING FRAGMENTS PRIOR TO ADVANCING TROOPS, VEHICLES OR TANKS THROUGH THE CLEARED AREA.**

- **CONNECTING THE M34 BLASTING MACHINE TO THE SELECTOR SWITCH ASSEMBLY ALLOWS A PATH FOR STRAY VOLTAGE TO REACH THE ROCKET MOTOR. THE M34 SHOULD NOT BE CONNECTED TO THE SELECTOR SWITCH ASSEMBLY UNTIL REACHING THE BREECH POSITION AND THE LAUNCHER RAIL IS RAISED TO THE FIRING POSITION AND YOU ARE READY TO FIRE. THE PRIMARY OPERATOR WILL KEEP THE M34 BLASTING MACHINE UNDER CONTROL AT ALL TIMES.**

CAUTION

- **LAUNCHING FROM A TRAILER WHICH IS NOT ATTACHED TO THE TOWING VEHICLE IS NOT A RECOMMENDED OPERATION. IF THE SITUATION NECESSITATES FIRING THIS WAY, ENSURE THAT THE PARKING BRAKES ARE ENGAGED AND THE WHEELS ARE CHOCKED. THIS WILL RESTRICT TRAILER MOVEMENT WHEN THE CABLE PULLS TIGHT.**

b. Prepare the Trailer for Launching

WARNING

THE ARRESTING CABLE IS UNDER GREAT TENSION AFTER THE LINEAR DEMOLITION CHARGE IS DEPLOYED AND, IN THE CASE OF THE INERT PRACTICE CHARGE WILL REMAIN UNDER TENSION. THE TENSION IS SO GREAT THAT THE TRAILER WILL BE JERKED FORWARD SEVERAL FEET IF THE CHOCKS ARE REMOVED, EVEN WITH THE BRAKES STILL SET. ASSURE ALL TENSION HAS BEEN REMOVED FROM THE ARRESTING CABLE PRIOR TO DISCONNECTING M68A2 LINEAR DEMOLITION CHARGE TRAINING FUZE.

(1) Level the trailer (see Figure 2.77) by adjusting the height of the trailer's landing wheels.

(2) Set the trailer's hand brake.

(3) Chock both wheels both front and rear.

(4) Attach heavy webbing, rope or cable (3) to the rear tie-down rings (2) of the charge container and attach the second-end to heavy stakes, shrubs (4). The configuration of the trailer, ropes and stakes should be similar to Figure 2.77.

Legend:

(1) Charge Container Tiedown Rings
(2) Webbing or Rope
(3) Stakes or Shrubs

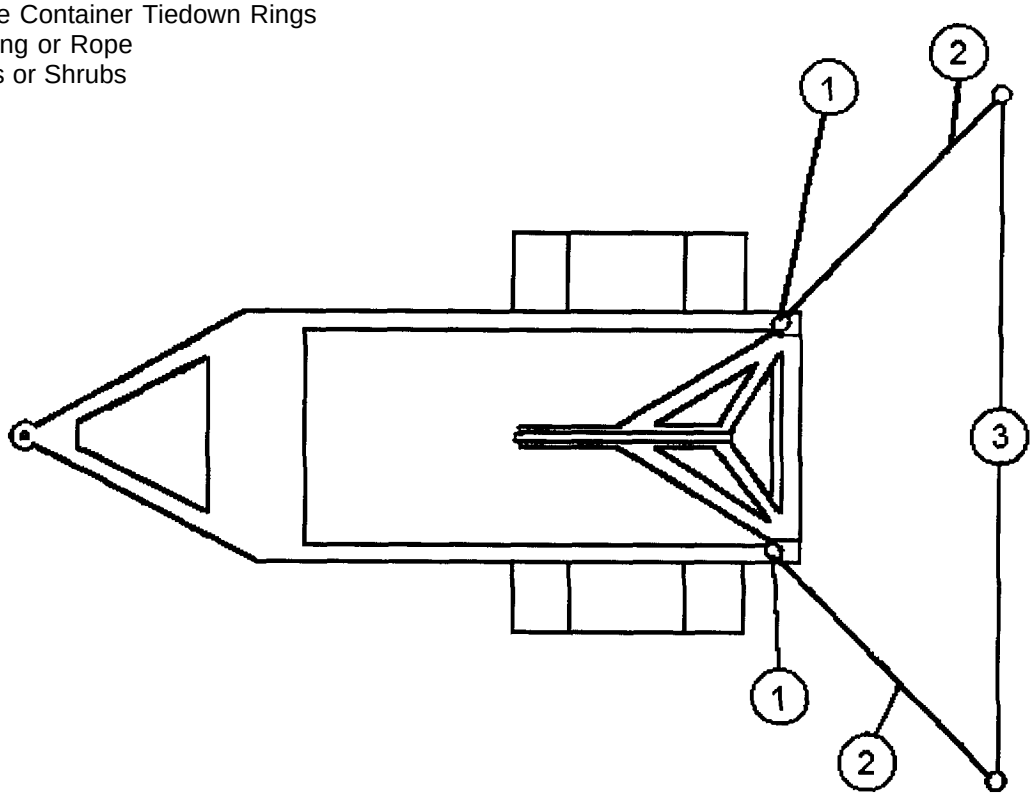

Figure 2.77. Configuration for Restraining Launcher and Trailer When Detached From Towing Vehicle

c. Prepare Launcher

(1) Observe danger zones, Figures 2.71, 2.72 and 2.73.

WARNING

LAUNCHING THE ROCKET MOTOR AT THE WRONG ANGLE CAN HAVE SERIOUS TO DEADLY CONSEQUENCES. ENSURE THAT WHITE MARKS ON INNER RAIL SUPPORTS ARE VISIBLE BUT HAVE NOT RISEN HIGH ENOUGH FOR THE VERTICAL WHITE MARKS (T-STRIPES) TO BE SEEN ABOVE THE OUTER LOWER LAUNCH RAIL SUPPORTS (ARMY ONLY). BOTH TOO LOW AND TOO HIGH LAUNCH ANGLES ARE DANGEROUS.

(2) Push hydraulic control valve lever to REMOTE RAISE position.

(3) Verify launcher rail is at correct firing angle, about 45-47°. This is indicated by white marks on launcher rail supports (ARMY ONLY) that are visible from rear of launcher.

d. Prepare to Launch Rocket Motor

(1) Take cable No. 3, selector switch box, M34 blasting machine and walk back to a position approximately 75 feet behind launcher and at no more than 30° from center line of launcher.

(2) Take cover from falling debris.

(3) Ensure selector switch is in OFF position.

(4) Test M34 blasting machine by repeatedly squeezing the handle until indicator light illuminates to ensure proper operation.

(5) Attach selector switch box to M34 blasting machine by cable No. 2.

(6) Advise friendly personnel take cover.

(7) Lift and turn selector switch knob to ROCKET position.

(8) To fire rocket, repeatedly squeeze M34 blasting machine handle.

(9) Wait approximately 10 seconds for completion of linear demolition charge deployment.

(10) When launching the M58 HE linear demolition charge, if the rocket motor initiates/fires but fails to launch from the rail. Evacuate the area a safe distance (3,280 feet minimum)(1,000 m). If the linear charge is on fire, allow it to burn out completely before personnel approach. If launching M58 HE linear demolition charge from the AVLM and rocket motor burns on the rail, evacuate the vehicle a safe distance (3,280 feet minimum)(1,000 m).

(11) If rocket fails to deploy, set selector switch knob to OFF and check cable connections to selector switch box.

(12) Set selector switch knob to ROCKET position and attempt to launch again.

(13) If rocket fails to deploy, set selector switch knob to OFF, disconnect M34 blasting machine and refer to misfire procedures. See para. 2.8.7.

(14) Visually verify that explosive section of linear demolition charge is a safe distance (205 feet)(62.5 m) in front of the launcher.

e. Detonate Linear Charge

(1) Set selector switch (1)(see Figure 2.78) to CHARGE position.

(2) Operate M34 blasting machine (2) handle repeatedly to detonate the M58 line charge.

WARNING

ALLOW A ONE MINUTE FALLOUT PERIOD FOR FALLING FRAGMENTS PRIOR TO ADVANCING TROOPS, VEHICLES OR TANKS THROUGH THE CLEARED AREA.

(3) After detonation occurs, wait 1-minute fallout period. Proofing of lane should be done IAW FM 20-32,.

(4) If linear charge fails to detonate, check M34 blasting machine (2) connections, set selector switch knob (1) to OFF and back to CHARGE position and repeat step g(1) through g(3).

(5) If linear charge fails again, set selector switch knob (1) to OFF position, disconnect M34 blasting machine (2) from cable No. 2 (3) and refer to misfire procedures. See para. 2.8.8.

Legend:

(1) Selector Switch
(2) M34 Blasting Machine
(3) Cable No. 2
(4) Selector Switch Box
(5) Lanyard

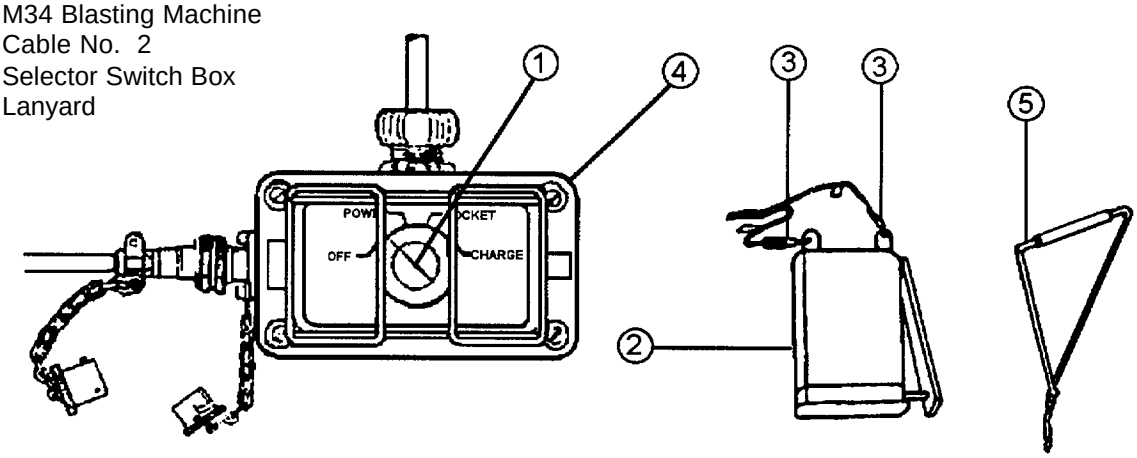

Figure 2.78. Components to Fire Rocket and Line Charge

NOTE

IF DEPLOYED LINEAR CHARGE WAS AN M68A2 LINEAR DEMOLITION CHARGE (INERT), REFER TO PARAGRAPH 2.8.11 FOR RECOVERY OF INERT CHARGE PRIOR TO GOING BACK TO TRANSFER POINT.

f. Secure Equipment

(1) Set selector switch (1)(see Figure 2.78) to OFF position.

(2) Disconnect cable No. 2 leads (3) from M34 blasting machine (2).

(3) Return M34 blasting machine (2), selector switch box (4) and lanyard (5) (if used) to storage container as soon as possible.

2.8.5 FIRING MOD 2/3 LAUNCHER FROM AN ARMORED TOW VEHICLE

a. Initial Setup

· **Tools**

- M34 Blasting Machine

· **References**

- FM 20-32
- Surface Danger Zones, Figures 2.71, 2.72 and 2.73.

· **General Safety Instructions**

- See warnings that follow.

WARNING

- **IF THE MK 22 ROCKET MOTOR INITIATES/FIRES AND FAILS TO LEAVE THE LAUNCH RAIL, DISCONNECT THE MICLIC SYSTEM FROM THE TOWING VEHICLE AND EVACUATE THE AREA. A BURNING ROCKET MOTOR CAN CATCH THE M58 LINEAR DEMOLITION CHARGE ON FIRE. A BURNING M58 LINEAR DEMOLITION CHARGE CAN DETONATE.**
- **DO NOT APPROACH A BURNING M58 LINEAR DEMOLITION CHARGE OR ATTEMPT TO EXTINGUISH THE FIRE. A BURNING LINEAR DEMOLITION CHARGE CAN DETONATE.**
- **TO PREVENT LAUNCH AT IMPROPER ANGLE, DO NOT ATTEMPT TO LAUNCH ROCKET IN EXTREMELY UNEVEN TERRAIN.**
- **DO NOT ATTEMPT TO BYPASS THE SAFETY SWITCH. DO NOT CONNECT W5P1 CONNECTOR TO LINEAR CHARGE JUNCTION BOX RECEPTACLE NO. 1 ON THE CONTAINER.**
- **CONNECTING THE M34 BLASTING MACHINE TO THE SELECTOR SWITCH ASSEMBLY ALLOWS A PATH FOR STRAY VOLTAGE TO REACH THE ROCKET MOTOR. THE M34 SHOULD NOT BE CONNECTED TO THE SELECTOR SWITCH ASSEMBLY UNTIL REACHING THE BREECH POSITION AND THE LAUNCHER RAIL IS RAISED TO THE FIRING POSITION AND YOU ARE READY TO FIRE. THE PRIMARY OPERATOR WILL KEEP THE M34 BLASTING MACHINE UNDER CONTROL AT ALL TIMES.**
- **TO AVOID INJURY, DO NOT ALLOW UNNECESSARY PERSONNEL IN THE DANGER ZONES.**

NOTE

LINE CHARGE OPERATOR MUST NOTIFY PERSONNEL INSIDE THE HOST VEHICLE BY ISSUING WARNING COMMANDS OF ACTIONS/OPERATING PROCEDURES ABOUT TO BE PERFORMED. THIS ENSURES THAT ALL PERSONNEL ARE UNDER COVER AND KNOW WHAT TO EXPECT IN THE DEPLOYMENT CYCLE. SUGGESTED COMMANDS ARE PROVIDED IN BOLD LETTERS AFTER THE ASSOCIATED ACTION THAT FOLLOWS.

b. Raise Rocket Motor

(1) Observe danger zones on Figures 2.71, 2.72 and 2.73 as applicable.

(2) Ensure W6 power cable is connected to selector switch assembly.

(3) Move vehicle power toggle switch to ON, raise rocket toggle switch to RAISE ROCKET position simultaneously and hold until launcher rail is raised to 45-47°. **(RAISE ROCKET MOTOR)**

WARNING

LAUNCHING THE ROCKET AT THE WRONG ANGLE CAN HAVE SERIOUS TO DEADLY CONSEQUENCES. ENSURE THAT WHITE MARKS ON INNER RAIL SUPPORTS ARE VISIBLE BUT HAVE NOT RISEN HIGH ENOUGH FOR THE VERTICAL WHITE MARKS (T-STRIPES) TO BE SEEN ABOVE THE OUTER LOWER LAUNCH RAIL SUPPORTS. BOTH TOO LOW AND TOO HIGH LAUNCH ANGLES ARE DANGEROUS.

(4) Allow minimum of 10 seconds for launcher rail to reach launch angle.

c. Launch Rocket Motor

(1) Visually check to ensure rocket is elevated. Proper firing angle is indicated when white marks on launcher rail supports are visible from MICLIC towing vehicle.

(2) Connect serviceable M34 blasting machine to cable No. 2 of selector switch assembly. **(M34 CONNECTED)**

WARNING

- **LAUNCH OF THE M58 HE LINEAR DEMOLITION CHARGE BY PERSONNEL OUTSIDE OF AN ARMORED VEHICLE IS PROHIBITED. THE LINEAR CHARGE IS SUSCEPTIBLE TO STATIC ELECTRICITY AND CAN PREMATURELY DETONATE IN THE AIR. PREMATURE DETONATION WILL ONLY OCCUR WHEN THE ARRESTING CABLE IS FULLY EXTENDED AND PRESENTS NO DANGER TO PERSONNEL IN A BUTTONED-UP ARMORED VEHICLE.**

- **ALL OPERATING AND CREW PERSONNEL MUST WEAR SINGLE HEARING PROTECTION WHEN FIRING ROCKET AND/OR LINEAR DEMOLITION CHARGE.**

- **WHEN LAUNCHING AND/OR DETONATING PREVIOUSLY FIRED M68A2, INERT RUBBER BLOCKS MAY COME LOOSE FROM CHARGE WHEN DEPLOYED AND TRAVEL SEVERAL HUNDRED FEET. PERSONNEL SHOULD STAY UNDER COVER FOR ONE MINUTE AFTER INERT CHARGE HAS HIT THE GROUND.**

- **DO NOT LAUNCH INERT CHARGE MORE THAN THREE TIMES. IF CABLE OR LINEAR DEMOLITION CHARGE FAILS DURING LAUNCH, THE ROCKET MOTOR COULD FLY FREE AND INJURE PERSONNEL.**

NOTE

SELECTOR SWITCH KNOB IS MOVED BY FIRST LIFTING THE KNOB AND THEN ROTATING THE KNOB TO THE DESIRED FUNCTION.

(3) Lift and rotate selector switch knob to ROCKET position.

(4) To launch rocket, repeatedly squeeze M34 blasting machine handle**. (ROCKET INITIATED)**

(5) Wait approximately 10 seconds for completion of linear demolition charge deployment.

WARNING

WHEN LAUNCHING THE M58 HE LINEAR DEMOLITION CHARGE, IF THE ROCKET MOTOR INITIATES/FIRES BUT FAILS TO LAUNCH FROM THE RAIL, QUICKLY DISENGAGE THE TRAILER FROM THE TOW VEHICLE. EVACUATE THE AREA TO A SAFE DISTANCE (3,280 FEET MINIMUM)(1,000 M). IF THE LINEAR CHARGE IS ON FIRE, ALLOW IT TO BURN OUT COMPLETELY BEFORE PERSONNEL APPROACH. IF LAUNCHING AN M58 HE LINEAR DEMOLITION CHARGE FROM THE AVLM, AND ROCKET BURNS ON THE RAIL, THEN EVACUATE THE VEHICLE TO A SAFE DISTANCE (3,280 FEET MINIMUM)(1,000 M).

(6) If rocket fails to launch, set selector switch knob to TEST/SAFE, and check all connections to selector switch assembly.

(7) Move selector switch knob (1) back to ROCKET position and attempt to launch again. **ROCKET RE-INITIATED)**

(8) If rocket fails to deploy again, set selector switch knob to TEST/SAFE, disconnect M34 blasting machine from selector switch assembly and refer to misfire procedures, para. 2.8.7. **(ROCKET MISFIRE)**

(9) Visually verify that explosive section of linear demolition charge (1) (see Figure 2.79) is a safe distance (205 feet) in front of vehicle. If explosive section is deployed on top of vehicle or closer than 205 feet (62.5 m), immediately disconnect M34 blasting machine from selector switch assembly. Evacuate from the vehicle a safe distance (3,280 feet) (1,000 m); fuze may be armed and is susceptible to static electricity. Contact EOD for disposal of linear demolition charge.

Legend:

(1) Linear Demolition Charge

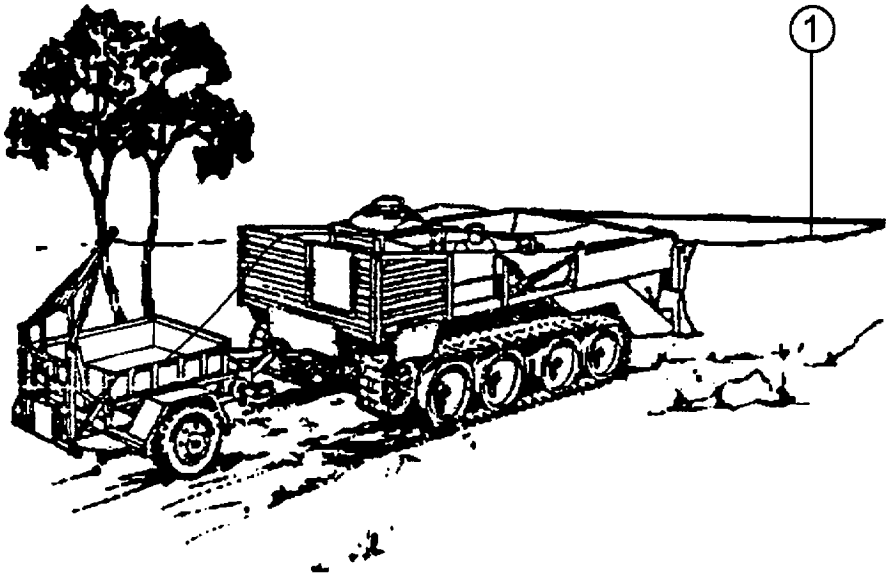

Figure 2.79. Ensure Line Charge is Properly Extended

d. Detonate Linear Charge

(1) Set selector switch knob (1) to CHARGE position (see Figure 2.80).

WARNING

ALLOW ONE MINUTE FALLOUT PERIOD FOR FALLING FRAGMENTS BEFORE ADVANCING TROOPS, VEHICLES OR TANKS THROUGH THE CLEARED AREA.

(2) Operate M34 blasting machine (2) repeatedly to detonate the M58 linear demolition charge. **(LINEAR CHARGE INITIATED)**

(3) After detonation occurs, wait for one minute fallout period. Proofing of lane should be done IAW FM 20-32.

(4) If linear demolition charge fails to detonate, check M34 blasting machine (2) connections, set selector switch knob (1) to TEST/SAFE and back to CHARGE position, and repeat firing. **(LINEAR CHARGE RE-INITIATED)**

(5) If linear demolition charge fails again, set selector switch knob (1) to TEST/SAFE position and disconnect M34 blasting machine (2). Refer to misfire procedures in paragraph 2.8.8. **(LINEAR CHARGE MISFIRE)**

Legend:

(1) Selector Switch Knob
(2) M34 Blasting Machine

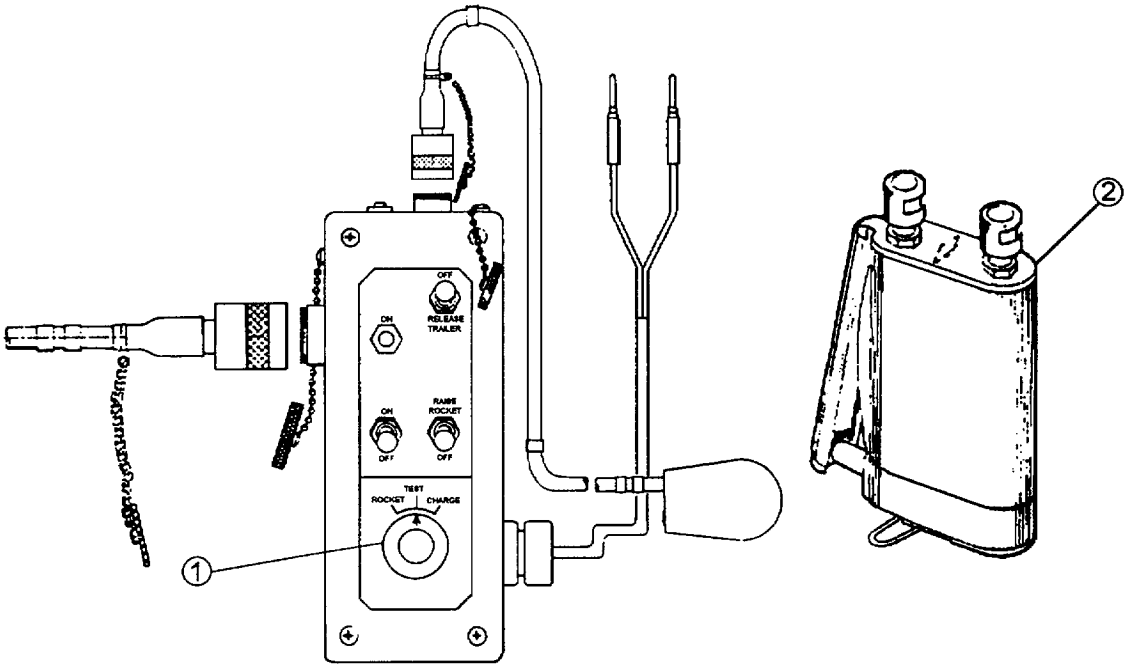

Figure 2.80. Selector Switch Assembly and M34 Blasting Machine

e. Secure Equipment

(1) If deployed, linear demolition charge was M68 inert charge, refer to para 2.8.11 to recover linear demolition charge before going back to transfer point.

(2) Set selector switch knob (1)(see Figure 2.80) to TEST/SAFE position.

(3) Disconnect cable No. 2 leads from M34 blasting machine (2).

(4) Use trailer disconnect device to disconnect trailer from tow vehicle. Move RELEASE TRAILER toggle switch to RELEASE TRAILER position and simultaneously move vehicle power toggle switch to ON position. Trailer jaws should open.

(5) Return selector switch assembly and W6 and W3 cables to storage container as soon as possible.

(6) Reconnect safety chains air hose and electrical connectors to tow vehicle.

2.8.6 FIRING MOD 2/3 LAUNCHER FROM OTHER THAN ARMORED TOW VEHICLE

NOTE

USE THIS PROCEDURE ONLY WHEN LAUNCHING THE M68 INERT LINEAR DEMOLITION CHARGE OR IN AN EMERGENCY COMBAT SITUATION.

a. Initial Setup.

· **Tools**

- M34 Blasting Machine

· **References**

- FM 20-32
- Surface Danger Zones, Figures 2.71, 2.72 and 2.73.

· **General Safety Instructions**

- See cautions and warnings at front of this manual.

WARNING

- **CONNECTING THE M34 BLASTING MACHINE TO THE SELECTOR SWITCH ASSEMBLY ALLOWS A PATH FOR STRAY VOLTAGE TO REACH THE ROCKET MOTOR. THE M34 SHOULD NOT BE CONNECTED TO THE SELECTOR SWITCH ASSEMBLY UNTIL REACHING THE BREECH POSITION AND THE LAUNCHER RAIL IS RAISED TO THE FIRING POSITION AND YOU ARE READY TO FIRE. THE PRIMARY OPERATOR WILL KEEP THE M34 BLASTING MACHINE UNDER CONTROL AT ALL TIMES.**

- **LAUNCH OF THE M58 HE LINEAR DEMOLITION CHARGE BY PERSONNEL OUTSIDE OF AN ARMORED VEHICLE IS PROHIBITED. THE LINEAR CHARGE IS SUSCEPTIBLE TO STATIC ELECTRICITY AND CAN PREMATURELY DETONATE IN THE AIR. PREMATURE DETONATION WILL ONLY OCCUR WHEN THE ARRESTING CABLE IS FULLY EXTENDED AND PRESENTS NO DANGER TO PERSONNEL IN A BUTTONED-UP ARMORED VEHICLE.**

- **THE MK 22 ROCKET MOTOR INITIATES/FIRES AND FAILS TO LEAVE THE LAUNCH RAIL, DISCONNECT THE MICLIC SYSTEM FROM THE TOWING VEHICLE AND EVACUATE THE AREA. A BURNING ROCKET MOTOR CAN CATCH THE M58 LINEAR DEMOLITION CHARGE ON FIRE. A BURNING M58 LINEAR DEMOLITION CHARGE CAN DETONATE.**

- **DO NOT APPROACH A BURNING M58 LINEAR DEMOLITION CHARGE OR ATTEMPT TO EXTINGUISH THE FIRE. A BURNING LINEAR DEMOLITION CHARGE CAN DETONATE.**

- **TO PREVENT LAUNCH AT IMPROPER ANGLE, DO NOT ATTEMPT TO LAUNCH ROCKET IN EXTREMELY UNEVEN TERRAIN.**

- **DO NOT ATTEMPT TO BYPASS THE SAFETY SWITCH. DO NOT CONNECT W5P1 CONNECTOR TO LINEAR CHARGE JUNCTION BOX RECEPTACLE NO. 1 ON THE CONTAINER.**

- **ALLOW A ONE MINUTE FALLOUT PERIOD FOR FALLING FRAGMENTS BEFORE ADVANCING TROOPS, VEHICLES OR TANKS THROUGH THE CLEARED AREA.**

- **TO AVOID INJURY, DO NOT ALLOW UNNECESSARY PERSONNEL IN THE DANGER ZONES.**

CAUTION

LAUNCHING FROM A TRAILER WHICH IS NOT ATTACHED TO THE TOWING VEHICLE IS NOT A RECOMMENDED OPERATION. IF THE SITUATION NECESSITATES FIRING THIS WAY, ENSURE THAT THE PARKING BRAKES ARE ENGAGED AND THE WHEELS ARE CHOCKED. THIS WILL RESTRICT TRAILER MOVEMENT WHEN THE CABLE PULLS TIGHT.

b. Prepare the Trailer for Launching

WARNING

THE ARRESTING CABLE IS UNDER GREAT TENSION AFTER THE LINEAR DEMOLITION CHARGE IS DEPLOYED AND, IN THE CASE OF THE INERT PRACTICE CHARGE WILL REMAIN UNDER TENSION. THE TENSION IS SO GREAT THAT THE TRAILER WILL BE JERKED FORWARD SEVERAL FEET IF THE CHOCKS ARE REMOVED, EVEN WITH THE BRAKES STILL SET. ASSURE ALL TENSION HAS BEEN REMOVED FROM THE ARRESTING CABLE PRIOR TO DISCONNECTING M68A2 LINEAR DEMOLITION CHARGE TRAINING FUZE.

(1) Level the trailer by adjusting the height of the trailer's landing wheel's /step jack.

(2) Set the trailer's hand brake.

(3) Chock both wheels both front and rear

(4) Attach heavy webbing, rope or cable (1)(see Figure 2.81) to the rear tie-down rings (2) of the charge container and attach the second-end to heavy stakes, shrubs (3), etc.

Legend:

(1) Webbing or Rope
(2) Charge Container Tiedown Rings
(3) Stakes or Shrubs

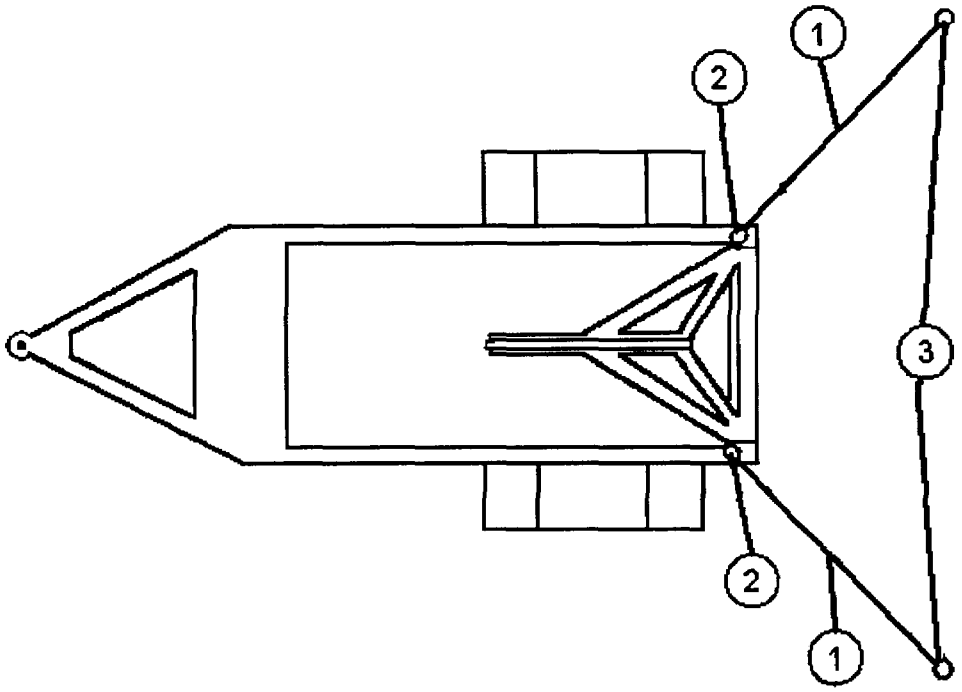

Figure 2.81. Configuration for Restraining Launcher and Trailer When Detached From Towing Vehicle

c. Prepare Launcher

(1) Observe danger zones on Figures 2.71, 2.72 and 2.73 as applicable.

(2) If connected, disconnect vehicle W6 power cable (1) (see Figure 2.82) from selector switch assembly (2).

(3) Disconnect (60 foot) W3 cable (3) from W5 cable (4) at cable bracket (5).

Legend:

(1) W6 Power Cable
(2) Selector Switch Assembly
(3) W3 Cable
(4) W5 Cable
(5) Cable Bracket
(6) Disconnect Device
(7) A4J1 Receptacle
(8) Safety Switch Assembly, J1

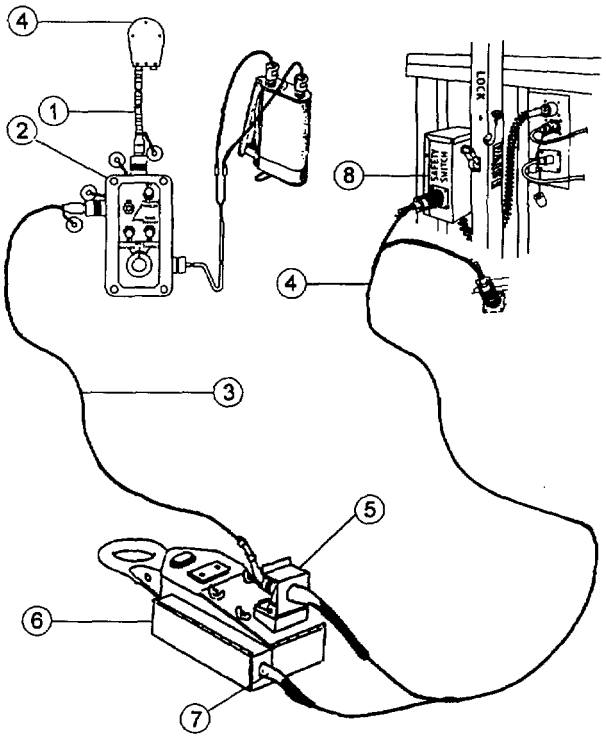

Figure 2.82. Electrical Hook-up for Trailer not Connected to Host Vehicle

(4) Disconnect W5 cable (4) from cable bracket (5) on disconnect device (6). Also disconnect W5 cable (4) from A4J1 receptacle (7).

(5) Move W5 cable (4) so that it extends to the rear of the trailer. Ensure that W5 cable (4) remains connected to safety switch assembly, J1 (8).

(6) Reconnect W3 cable (3) to W5 cable (4) at the cable bracket (5) and to selector switch assembly (2).

WARNING

LAUNCHING THE ROCKET AT THE WRONG ANGLE CAN HAVE SERIOUS TO DEADLY CONSEQUENCES. ENSURE THAT WHITE MARKS ON INNER RAIL SUPPORTS ARE VISIBLE BUT HAVE NOT RISEN HIGH ENOUGH FOR THE VERTICAL WHITE MARKS (T-SHIRTS) TO BE SEEN ABOVE THE OUTER LOWER LAUNCHER RAIL SUPPORTS. BOTH TOO LOW AND TOO HIGH LAUNCH ANGLES ARE DANGEROUS.

(7) Push hydraulic control valve lever to REMOTE RAISE.

(8) Visually check to ensure rocket is elevated to proper firing angle which is 45-47°. This is indicated when white marks on launcher rail supports are visible.

d. Prepare to Launch Rocket Motor

(1) Take selector switch assembly and M34 blasting machine and walk back to a protected position approximately 75 feet (22.9 m) behind launcher at no more than 30° from center line of launcher.

WARNING

LAUNCH OF THE M58 LINEAR DEMOLITION CHARGE BY PERSONNEL OUTSIDE OF AN ARMORED VEHICLE IS PROHIBITED. THE LINEAR CHARGE IS SUSCEPTIBLE TO STATIC ELECTRICITY AND CAN PREMATURELY DETONATE IN THE AIR. PREMATURE DETONATION WILL ONLY OCCUR WHEN THE ARRESTING CABLE IS FULLY EXTENDED AND PRESENTS NO DANGER TO PERSONNEL IN A "BUTTONED-UP" ARMORED VEHICLE.

(2) Take available cover. Debris may fall for one minute.

(3) Set selector switch knob (1) (see Figure 2.83) to TEST/SAFE position.

(4) Test M34 blasting machine (2) by repeatedly squeezing the handle until indicator light illuminates to ensure proper operation.

WARNING

CONNECTING THE M34 BLASTING MACHINE TO THE SELECTOR SWITCH ASSEMBLY ALLOWS A PATH FOR STRAY VOLTAGE TO REACH THE ROCKET MOTOR. THE M34 SHOULD NOT BE CONNECTED TO THE SELECTOR SWITCH ASSEMBLY UNTIL REACHING THE BREECH POSITION AND THE LAUNCHER RAIL IS RAISED TO THE FIRING POSITION AND YOU ARE READY TO FIRE. THE PRIMARY OPERATOR WILL KEEP THE M34 BLASTING MACHINE UNDER CONTROL AT ALL TIMES.

(5) Attach M34 blasting machine (2) by connecting leads (3) of cable No. 2 (4) to M34 blasting machine connection posts (5).

WARNING

- **DO NOT LAUNCH INERT CHARGE MORE THAN THREE TIMES. IF CABLE OR LINEAR DEMOLITION CHARGE FAILS DURING LAUNCH, THE ROCKET COULD FLY FREE AND INJURE PERSONNEL.**
- **ALL OPERATING AND CREW PERSONNEL MUST WEAR SINGLE HEARING PROTECTION WHEN FIRING ROCKET AND/OR LINEAR DEMOLITION CHARGE.**
- **WHEN LAUNCHING PREVIOUSLY FIRED M68A2, INERT RUBBER BLOCKS MAY COME LOOSE FROM CHARGE WHEN DEPLOYED AND TRAVEL SEVERAL HUNDRED FEET. PERSONNEL SHOULD STAY UNDER COVER ONE MINUTE AFTER INERT CHARGE HAS HIT THE GROUND.**
- **FOR REASONS OF PERSONAL SAFETY AND HEALTH, AVOID CONTACT WITH COMBUSTION PRODUCTS OF ROCKET LAUNCH AND CHARGE DETONATION.**

(6) Set selector switch knob (1) to ROCKET position.

Legend:

(1) Selector Switch Knob
(2) M34 Blasting Machine
(3) Connecting Leads
(4) Cable No. 2
(5) Connection Posts

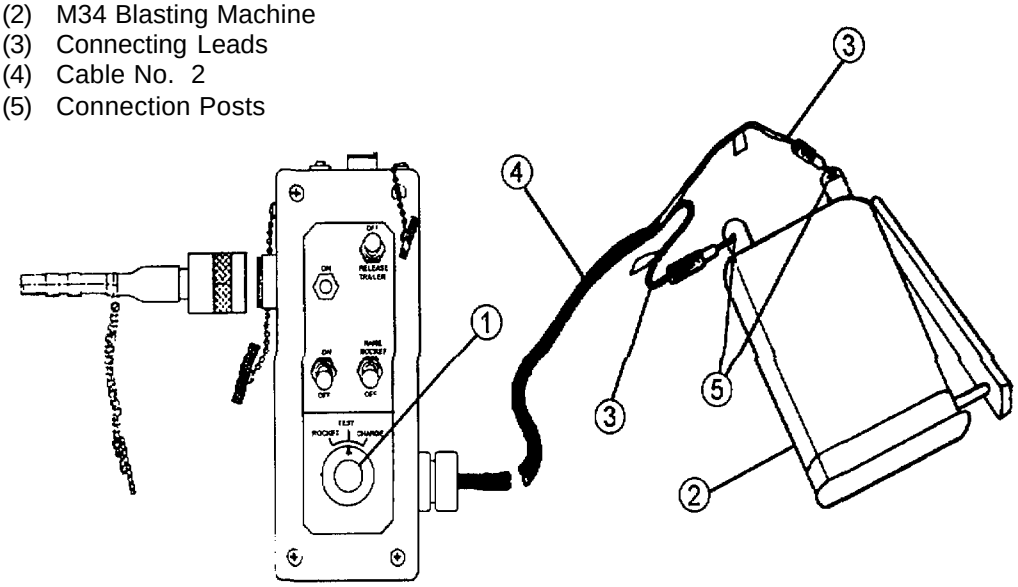

Figure 2.83. Selector Switch Assembly and M34 Blasting Machine

(7) To launch rocket, repeatedly squeeze M34 blasting machine (2) handle.

(8) Wait approximately 10 seconds for completion of linear demolition charge deployment.

WARNING

WHEN LAUNCHING M58 HE LINEAR DEMOLITION CHARGE, IF THE ROCKET MOTOR INITIATES/FIRES BUT FAILS TO LAUNCH FROM THE RAIL, QUICKLY DISENGAGE THE TRAILER FROM THE TOW VEHICLE. EVACUATE THE AREA TO A SAFE DISTANCE (3,280 FEET MINIMUM) (1,000 MI. IF THE LINEAR CHARGE IS ON FIRE, ALLOW CHARGE TO BURN OUT COMPLETELY BEFORE PERSONNEL APPROACH. IF LAUNCHING AN M58 HE LINEAR DEMOLITION CHARGE FROM THE AVLM AND ROCKET MOTOR BURNS ON THE RAIL, EVACUATE THE VEHICLE TO A SAFE DISTANCE (3,280 FEET MINIMUM)(1,000 M).

(9) If rocket fails to launch, set selector switch knob to TEST/SAFE and check all connections to selector switch assembly.

(10) Move selector switch knob (1) back to ROCKET position and attempt to launch again, step d(6) through d(8).

(11) If rocket fails to deploy again, set selector switch knob to TEST/SAFE, disconnect M34 blasting machine from selector switch assembly, and refer to misfire procedures, paragraph 2.8.7.

(12) Visually verify linear demolition charge is a safe distance (205 feet) in front of vehicle. If linear demolition charge is not a safe distance, do not detonate. If explosive section is deployed on top of vehicle or closer than 205 feet (62.5 m), immediately disconnect M34 blasting machine from selector switch assembly. Evacuate from the vehicle a safe distance (3,280 feet)(1,000 m) fuze may be armed and is susceptible to static electricity. Contact EOD for disposal of linear demolition charge.

e. Detonate Linear Charge

(1) Set selector switch knob (1) (see Figure 2.83) to CHARGE position.

(2) Operate M34 blasting machine (2) repeatedly to detonate the M58 linear demolition charge.

WARNING

ALLOW A ONE MINUTE FALLOUT PERIOD FOR FALLING FRAGMENTS BEFORE ADVANCING TROOPS, VEHICLES OR TANKS THROUGH THE CLEARED AREA.

(3) After detonation occurs, wait the one minute fallout period. Proofing of lane should be done IAW FM 20-32.

(4) If linear demolition charge fails to detonate again, check M34 blasting machine connections, set selector switch knob to TEST/SAFE and back to CHARGE position and repeat step e(2).

(5) If linear demolition charge fails again, set selector switch knob (1) to TEST/SAFE position and disconnect M34 blasting machine (2). Refer to misfire procedures in para. 2.8.8.

f. Secure Equipment

(1) If deployed and linear demolition charge was a M68 inert charge, refer to para 2.8.11. To recover linear demolition before going back to transfer point.

(2) Set selector switch knob (1)(see Figure 2.83) to TEST/SAFE position.

(3) Disconnect cable No. 2 (4) from M34 blasting machine (2).

(4) Return selector switch assembly, and W3, W5, and W6 cables to storage container(s) as soon as possible.

2.8.7 GENERAL MISFIRE PROCEDURES FOR ROCKET MOTOR

a. Initial Setup

· **Tools and Special Tools**

- M34 Blasting Machine
- M51 Blasting Cap Test Set

· **Materials/Parts**

- Ink
- Marker
- Paint

· **References**

- For Army, AR 75-1
- For Marine Corps, MCO 8025.1C

· **General Safety Instructions**

- Observe 30 minute waiting period.

WARNING

DURING MISFIRES OR MALFUNCTIONS DO NOT APPROACH THE LAUNCHER FOR ANY REASON UNTIL A MINIMUM OF 30 MINUTES HAS PASSED SINCE THE LAST ATTEMPT TO FIRE THE ROCKET MOTOR.

NOTE

IF THE FOLLOWING PROCEDURES DO NOT INITIATE THE ROCKET MOTOR, DISCONNECT ALL POWER, THE M34 BLASTING MACHINE, AND CONDUCT A CONTINUITY CHECK OF THE LINE CHARGE CONTROL PANEL BEFORE MARKING THE ROCKET MOTOR AS A MISFIRE.

b. Initiate Misfire Procedure

(1) Visually ensure launch rail is at the launch angle (45-47°). Launcher must be positioned at launch angle before circuit is complete through safety switch.

(2) Check to assure cable assembly No. 2 is properly and securely connected to the blasting machine and to the selector switch. Check the connection between the selector switch and cable assembly No. 3.

(3) Double check the selector switch to make sure it is set on **ROCKET** and then operate the blasting machine a second time making sure to squeeze the handle repeatedly.

(4) Attempt to fire rocket motor again. If the rocket motor functions in the normal manner, proceed to detonate the charge.

(5) If electrical connections checked in steps (2) and (3) appear to be correct, the blasting machine becomes suspect.

(6) Make sure that M34 blasting machine is disconnected from cable No. 2 MOD 0/1, set selector switch box knob to OFF. MOD 2/3, set selector switch assembly knob to TEST/SAFE.

(7) Check the M34 blasting machine by repeatedly squeezing the operating handle until indicator lamp lights.

(a) If indicator lamp does not light, obtain a new M34 blasting machine and repeat firing procedure.

(b) If indicator lamp lights, connect M51 blasting cap test set to the selector switch assembly. Set the selector switch assembly to ROCKET. Operate the M51 blasting cap test set.

(8) If M51 blasting cap test set lamp does not light, set the selector switch assembly to OFF (on Mod 0/1 or Test/Safe for Mod 2/3) and disconnect the M51 blasting cap test set. Wait 30 minutes, exit the tow vehicle. Remove the rocket motor electrical connector from junction box receptacle No. 3. Install the shorting plug in receptacle No. 3. Return to tow vehicle. Connect the M51 blasting cap test set to the selector switch assembly. Set selector switch knob to ROCKET. Operate the M51 blasting cap test set.

(9) If M51 blasting cap test set lamp does not light, there is a problem in the launcher blasting cap. Proceed to step 11.

(10) If the M51 blasting cap test set lamp lights, there is a problem with the M34 blasting machine or with the rocket motor. Perform M34 blasting machine troubleshooting procedures in Chapter 4. If M34 is functioning properly, proceed to step 12.

(11) Disconnect the M51 blasting cap test set. Exit vehicle. Install protective cap on receptacle No. 3. Lower launch rail. Remove threaded retainer pin (MOD 3) or quick-release pin (MOD 4) from head of rocket motor. Remove linear demolition charge connector from receptacle No. 2. See troubleshooting procedures in Chapter 4.

(12) Disconnect the M51 blasting cap test set. Exit vehicle. Install protective cap on receptacle No. 3. Lower launch rail. Remove threaded retainer pin (MOD 3) or quick-release pin (MOD 40 from head of rocket motor. Remove rocket motor from launcher. Use ink or marker to print MISFIRED on rocket motor. Repack rocket motor in original box. Use ink or marker to print MISFIRED on the box.

(13) Return rocket motor to ASP. For Army, report IAW AR 75-1. Marine Corps report IAW MCO 8025.1C.

(14) If the rocket motor fails to fire, but a flash is observed or pop is heard coming from the rocket motor, a hangfire is present. **A 30-MINUTE MINIMUM WAITING PERIOD** shall be strictly observed before anyone approaches the rocket motor location. Remove the pin from the thrust neutralization plug. Remove the rocket motor electrical connector from receptacle no. 3 of the charge container. Remove the rocket motor bridle cable from the line charge. Carefully remove the rocket motor from the launch rail. A highly trained engineer or EOD personnel should destroy the rocket motor.

2.8.8 GENERAL MISFIRE PROCEDURES FOR LINEAR DEMOLITION CHARGE

a. Initial Setup

· **Tools**

- M34 Blasting Machine

· **References**

- For Army, AR 75-1, Malfunctions Involving Ammunition and Explosives.
- For Marine Corps, MCO 8025.1C.

· **General Safety Instructions**

- See warnings that follow.

WARNING

DO NOT APPROACH THE LINEAR DEMOLITION CHARGE FOR ANY REASON UNTIL A 30 MINUTE WAITING PERIOD HAS ELAPSED SINCE THE LAST ATTEMPT TO DETONATE THE LINEAR DEMOLITION CHARGE.

b. Initiate Misfire Procedure

(1) Disconnect M34 blasting machine from selector switch assembly. If tactical situation permits, then wait 30 minutes before exiting vehicle or covered position.

(2) Exit vehicle. Check that linear demolition charge electrical connector is securely tightened to junction box receptacle box No. 2. Return to vehicle. Repeat firing sequence.

(3) If linear demolition charge still does not detonate, move the towing vehicle forward enough to reduce tension on the arresting cable. Repeat firing sequence. If this does not detonate charge, charge is now classified as a dud.

WARNING

BE CAREFUL WHEN APPROACHING A DEPLOYED LINEAR DEMOLITION CHARGE. IN MOST CASES THE FUZE WILL BE ARMED AND IS SUSCEPTIBLE TO STATIC ELECTRICITY. DO NOT ATTEMPT TO RECOVER THE FUZE FROM A MISFIRED LINEAR DEMOLITION CHARGE.

(4) **IN A TRAINING SITUATION.** If a linear demolition charge still does not detonate, wait 30 minutes before exiting vehicle or moving from cover. Contact EOD to detonate the linear demolition charge in place. If local EOD and Range Safety Officer allow, the combat engineer unit can detonate the linear demolition charge by placing a timed fuze in the first block of C4 or by placing a timed fuze in a piece of C4 and setting this next to the first block of linear demolition charge. Do not touch or disturb the fuze; but, if possible, check to see if the fuze is armed (red showing in arming window).

(5) **(ARMY ONLY) IN A COMBAT SITUATION.** If the linear demolition charge still does not detonate, attempt to detonate linear demolition charge with weapon fire from towing vehicle's gun or from covering vehicle's gun. If this is not successful, disconnect MICLIC from tow vehicle. Evacuate the tow vehicle to a safe distance and call for artillery fire to detonate the linear demolition charge.

(6) Occasionally, a portion of the line charge will not detonate. The failure is most likely caused by a break in the detonating cords where sections of the unit charges are joined. Delay investigation of misfire at least 30 minutes after expected time of detonation. This should be ample time for any delayed explosion to take place. Under certain combat conditions, however, immediate investigation may be necessary. It will be necessary to blow the line charge in place using approved engineering procedures or by contacting EOD personnel for disposal. Detonation by other electric or non-electric methods will be required and should only be conducted by properly trained personnel.

(7) If the arresting cable breaks during line charge deployment, a breakage of the electrical lead running through the center of the arresting cable will also occur. Electrical firing of the line charge through the trailer-mounted launcher system is not possible when this condition occurs. It may be necessary to blow the line charge in place using approved engineering procedures or by contacting EOD personnel for disposal.

(8) **MALFUNCTIONS REPORT.** For Army, report IAW AR 75-1. Marine Corps report IAW MCO 8025.1C.

2.8.9 MISFIRE TROUBLESHOOTING If cause of misfire/malfunction cannot be determined, have maintenance personnel test safety switch, selector switch box/assembly, M34 blasting machine and firing cables No. 3 or W5/W3/W6.

2.8.10 RESETTING LINEAR ACTUATOR IN TRAILER DISCONNECT DEVICE AFTER OPERATION (MOD 2/3)

NOTE

THIS OPERATION IS REQUIRED ONLY AFTER DISCONNECT DEVICE HAS BEEN ACTIVATED AND THE JAWS HAVE OPENED.

a. Loosen thumbscrews on disconnect housing cover (1)(see Figure 2.84) and actuator housing cover (2) and lift covers.

b. Disconnect moving-end of linear actuator (3) from actuator arm (4).

c. Manually screw actuator (3) back to closed jaw position by screwing clockwise.

d. Reconnect moving-end of actuator (3) to actuator arm (4).

e. Ensure pin (5) on actuator arm (3) is straight up and down.

Legend:

(1) Housing Cover
(2) Housing Cover, Actuator
(3) Linear Actuator
(4) Actuator Arm
(5) Actuator Pin

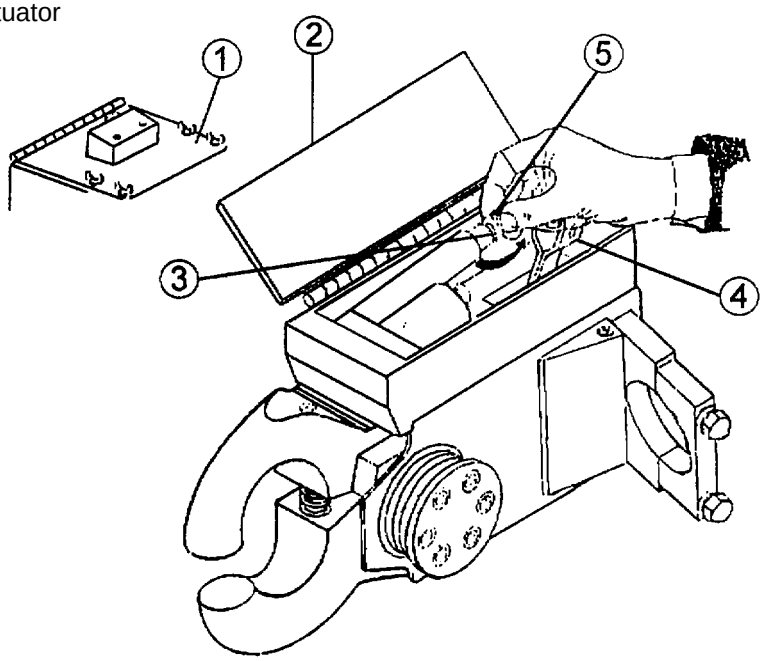

Figure 2.84. Reset Actuator of Disconnect Device

f. Manually close-jaws (1)(see Figure 2.85) and hold closed. Roller carriage (2) will spring into closed-jaw position.

g. Ensure roller carriage (2) is properly seated in closed-jaws position by manually pulling on roller carriage as shown. Ensure roller carriage (2) is lined up with or pulled past scribe lines on roller guide (3).

h. Close disconnect housing cover and actuator housing cover and tighten thumbscrews.

Legend:

(1) Jaws
(2) Roller Carriage
(3) Roller Guide
(4) Scribe Line

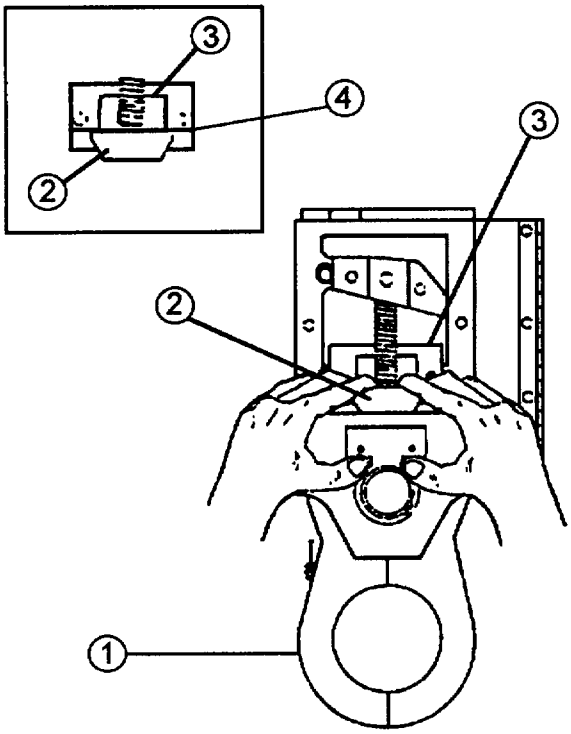

Figure 2.85. Close and Reset Jaws of Trailer Disconnect Device

i. If required, remove travel-lock pin (1)(see Figure 2.86) from storage position (2) and install in the trailer disconnect device's (3) locked-jaws position 14).

Legend:

(1) Travel Lock Pin
(2) Storage Position
(3) Disconnect Device
(4) Locked Position

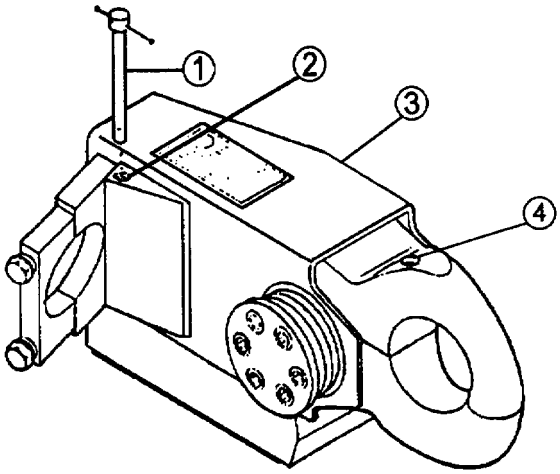

Figure 2.86. Trailer Disconnect Device Travel Lock

2.8.11 RECOVERING M68A2 (INERT) LINEAR CHARGE ONLY

a. Initial Setup

· **Tools**

- Two 15-inch adjustable wrenches (NSN 5120-00-423-6728)
- One 1-1/8-inch wrench and one 1-1/16-inch wrench

· **Materials/Parts**

- Gloves, men (NSN 8415-00-634-4660)

· **General Safety Instructions**

- See cautions and warnings at front of this manual.

WARNING

· **DO NOT REMOVE BALL-LOCK PINS FROM ARRESTING CABLE FUZE CONNECTOR UNTIL ALL TENSION HAS BEEN REMOVED FROM ARRESTING CABLE. IF TENSION REMAINS IN THE ARRESTING CABLE, THE FUZE WILL FLY FORWARD AND THE CONNECTOR WILL FLY BACK TOWARD THE CONTAINER AS SOON AS THE PIN IS REMOVED.**

· **EXPENDED ROCKET MOTORS MAY BE TOO HOT TO TOUCH FOR DISPOSAL WAIT UNTIL THE ROCKET MOTOR HAS COOLED SUFFICIENTLY TO TOUCH WITHOUT CAUSING BURNS AND HANDLE CAREFULLY WITH GLOVES.**

NOTE

WHEN REMOVING OR INSERTING BALL-LOCK PINS, IT MAY BE NECESSARY TO RAISE OR LOWER LAUNCHER RAIL SLIGHTLY.

b. Disconnect Electrical Cables and Secure Caps

(1) Disconnect linear demolition charge electrical lead (1)(see Figure 2.87) from receptacle No. 2 (2) on linear demolition charge container. Replace protective cap on receptacle No. 2 (2).

(2) Disconnect and discard rocket electrical lead (3) from receptacle No. 3 (4) and replace protective cap.

(3) Disconnect W5 cable assembly (5)(ARMY ONLY) or No. 3 power cable (5) from safety switch receptacle (6) .

(4) Disconnect safety switch electrical lead (7) from receptacle No. 1 (8) and connect to safety switch J1 receptacle (6) 1. Replace protective cap on receptacle No. 1 (8).

Legend:

(1) Charge Lead
(2) Receptacle No. 2
(3) Rocket Lead
(4) Receptacle No. 3
(5) Cable W5/No. 3 Power Cable
(6) Safety Switch J1 Receptacle
(7) Safety Switch Lead
(8) Receptacle No. 1

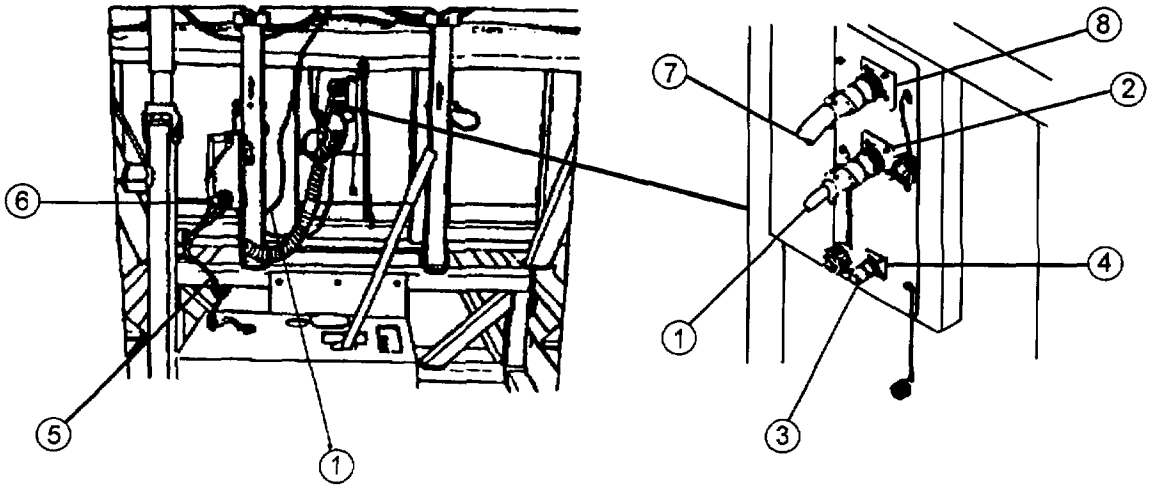

Figure 2.87. Disconnecting M68 Line Charge From MK 155 Launcher

c. Remove Training Fuze from M68 Linear Demolition Charge

(1) Move tow vehicle forward to remove tension from arresting cable.

WARNING

DO NOT REMOVE BALL-LOCK PINS FROM ARRESTING CABLE FUZE CONNECTOR UNTIL ALL TENSION HAS BEEN REMOVED FROM ARRESTING CABLE. IF TENSION REMAINS IN THE ARRESTING CABLE, THE FUZE WILL FLY FORWARD AND THE CONNECTOR WILL FLY BACK TOWARD THE CONTAINER AS SOON AS THE PIN IS REMOVED.

(2) Remove ball-lock pin (1)(see Figure 2.88) from arresting cable fuze connector (2) .

(3) Separate linear demolition charge fuze connector (3) from arresting cable fuze connector (2) and fuze (4).

(4) Replace ball-lock pin (1) in arresting cable fuze connector (2).

(5) Separate the fuze (4) and arresting cable fuze connector (2) exposing the electrical connector (5) and arming wire connector (6).

(6) Unscrew electrical connector (5) from electrical receptacle (7).

(7) Put plastic protective cap (8)(stored in storage container) on fuze's electrical receptacle (7).

(8) Unscrew arming wire connector (6) from arming pin assembly (9).

(9) Place training fuze (4) and shorting plug (stored in storage container) in original fuze package, which should have been stored in storage container and retain with linear demolition charge,

Legend:

(1) Ball-lock Pin
(2) Fuze Connector
(3) Fuze Connector
(4) Fuze
(5) Electrical Connector
(6) Arming Wire Connector
(7) Electrical Receptacle
(8) Protective Cap
(9) Arming Pin

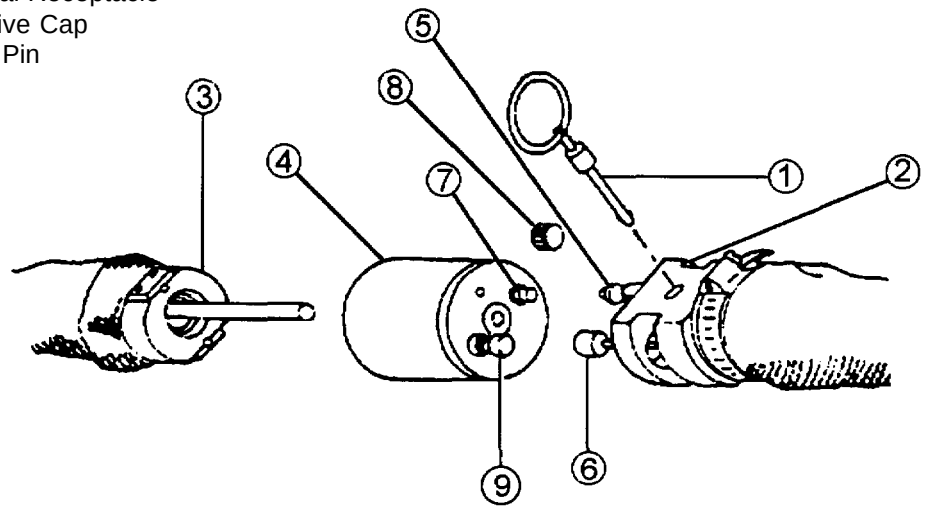

Figure 2.88. Disassembly of the M68 Fuze Assembly

WARNING

EXPENDED ROCKET MOTORS MAY BE TOO HOT TO TOUCH FOR DISPOSAL WAIT UNTIL THE ROCKET MOTOR HAS COOLED SUFFICIENTLY TO TOUCH WITHOUT CAUSING BURNS, AND HANDLE CAREFULLY WITH GLOVES.

d. Remove Rocket Bridle Cable from Arresting Cable

(1) Using two 15 in. adjustable wrenches or one 1-1/8-inch wrench and one 1-1/6-inch wrench, remove bolt (1)(see Figure 2.89) and nut (2) from harness connector (3) and rocket bridle cable (4).

(2) Remove rocket bridle cable (4).

(3) Secure bolt (1) and nut (2) into rocket harness connector (3).

(4) Notify EOD/range control to arrange disposal of expended rocket (5), which may still have unburned rocket propellant in it.

(5) Remove arresting cable hook from container eye.

Legend:

(1) Bolt
(2) Nut
(3) Harness Connector
(4) Bridle Cable
(5) Expended Rocket

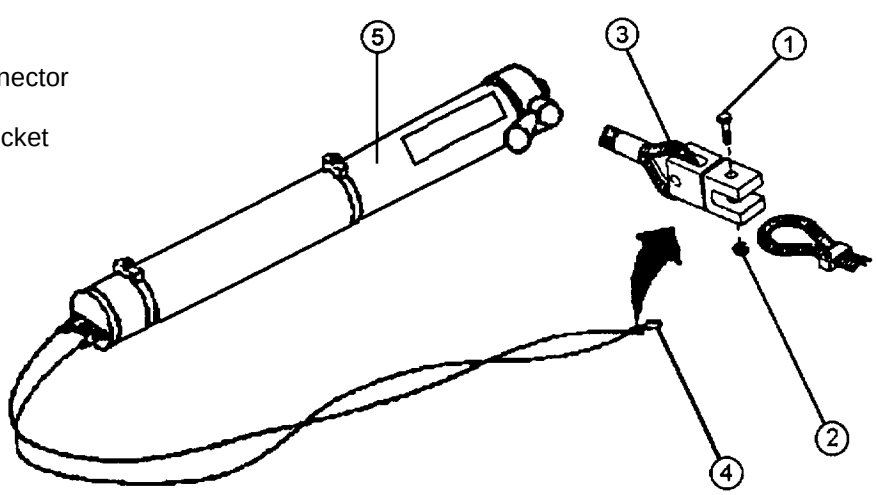

Figure 2.89. Disconnect Line Charge from Rocket Bridle Cable

e. Load and Transport Linear Charge

(1) Load M68A2 linear demolition linear charge (inert) and arresting cable starting at rocket harness connector-end, onto a suitable vehicle.

(2) Return to maintenance work area for repair, cleaning and repacking.

2.8.12 REMOVING LINEAR DEMOLITION CHARGE CONTAINER FROM LAUNCHER

a. Initial Setup

· **Tools and Special Tools**

- General Mechanic's Tool Kit (Army NSN 5180-00-177-7033, Marine Corps NSN 5180-00-606-3566)
- Forklift capable of lifting 4,000 lbs (1,816 kg)
- Adjustable wrench (NSN 5120-00-423-6728)

· **General Safety Instructions**

- See warnings and cautions that follow.

NOTE

· **IF DEPLOYED LINEAR CHARGE WAS AN M68A2 LINEAR DEMOLITION CHARGE CONTAINER (INERT), FIRST REFER TO "RECOVERY OF M68A2 (INERT) LINEAR CHARGE" PROCEDURE, PARAGRAPH 2.8.11.**

· **WHEN REMOVING OR INSERTING BALL-LOCK PINS, IT MAY BE NECESSARY TO RAISE OR LOWER THE LAUNCHER RAIL SLIGHTLY.**

b. Disconnect Electrical Cables and Secure Caps

(1) Disconnect and discard rocket lead (1)(see Figure 2.90) from receptacle No. 3 (2) linear demolition charge container and replace its protective cap.

(2) Disconnect power cable No. 3 (3) or W5 cable (3) from safety switch assembly connector, J1 (4) .

(3) Disconnect safety switch electrical lead (5) from receptacle No. 1 (86), connect safety switch electrical lead (5) to J-1 (4), and replace protective cap.

(4) Disconnect linear demolition charge electrical lead (7) from receptacle No. 2 (8) and replace protective cap (9).

Legend:

(1) Rocket Lead
(2) Receptacle No. 3
(3) No. 3 Power Cable/W5 Cable
(4) Safety Switch Receptacle, J1
(5) Safety Switch Lead
(6) Receptacle No. 1
(7) Charge Lead
(8) Receptacle No. 2
(9) Protective Cap

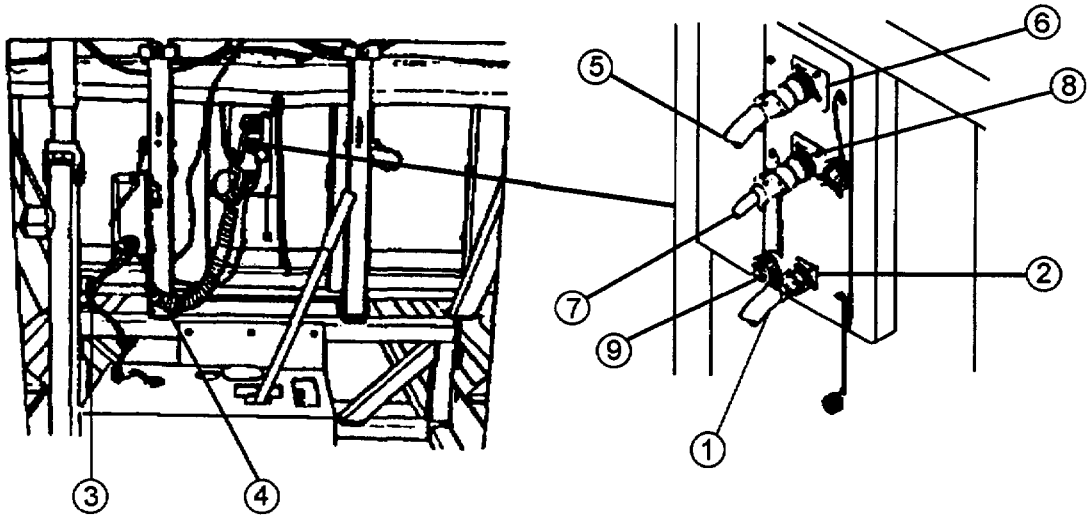

Figure 2.90. Disconnect Charge and MK 155 Electrical Connections

c. Raise Launcher Rail

(1) If still present, disconnect linear charge arresting cable (1)(see Figure 2.91) hook from linear charge container eye.

(2) Move hydraulic control valve lever (2) to MANUAL RAISE/LOWER position.

NOTE

WHEN REMOVING OR INSERTING BALL-LOCK PINS, IT MAY BE NECESSARY TO RAISE OR LOWER THE LAUNCHER RAIL SLIGHTLY

(3) Remove ball-lock pins (3) on launcher rail supports (4) from RAISE position. Let ball-lock pins hang from the launcher rail supports.

CAUTION

NEVER RAISE LAUNCHER RAIL BEYOND THE POINT WHERE THREADS START TO SHOW ON HYDRAULIC CYLINDER, ABOUT 750 ELEVATION OR THE HYDRAULIC CYLINDER MAY BE DAMAGED.

(4) Operate pump handle (5) until first thread on hydraulic cylinder (6) appears, about 75°.

(5) Replace ball-lock pins in LOCK position.

Legend:

(1) Arresting Cable
(2) Control Valve
(3) Ball-lock Pins
(4) Launcher Supports
(5) Pump Handle
(6) Cylinder Threads
(7) Nylon Cover
(8) Locknuts
(9) Turnbuckles

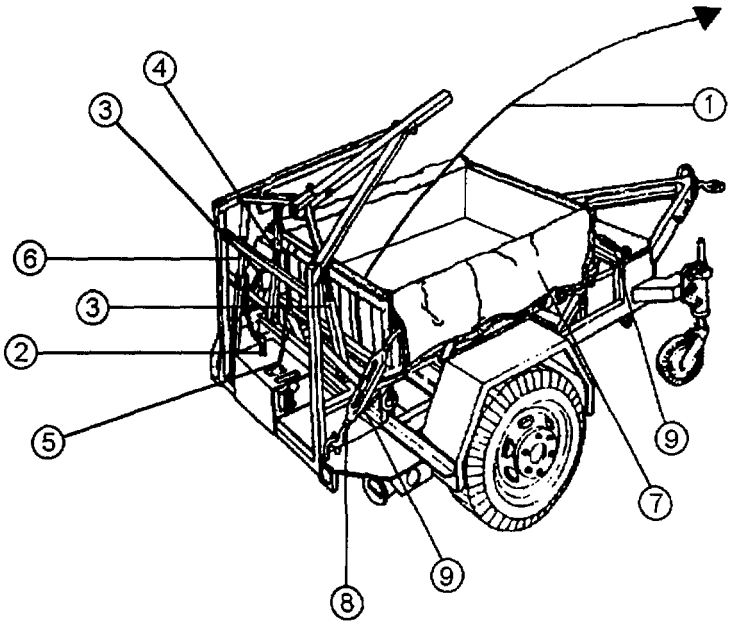

Figure 2.91. Prepare for Removal of Charge Container from MK 155 Launcher

d. Unload Linear Charge Container

(1) Remove and clean protective nylon cover (7) and place in storage container.

(2) Remove, clean, roll up and return cable No. 3 or W5, W6, and W3 and selector switch box/assembly to storage container.

(3) Using adjustable or 1-1/8 inch open-end wrench, loosen turnbuckle locknuts (8)(see Figure 2.91).

(4) Using available tools, loosen and remove turnbuckles (9).

(5) Remove lifting sling (1)(see Figure 2.92) from storage container. Remove bungee straps from storage container and place in linear demolition charge container.

(6) Return turnbuckles to storage container.

(7) Place lifting sling (1) on linear demolition charge container (2) with its long axis parallel to the long axis of container.

(8) Hook the four snap hooks (3) through four lifting rings (4) with hook tips facing outward.

WARNING

DO NOT ALLOW LINEAR DEMOLITION CHARGE CONTAINER TO SWAY DURING REMOVAL TO AVOID INJURY TO PERSONNEL. MARINE CORPS RECOMMENDS USE OF ROPES TO CONTROL SWAYING.

CAUTION

DO NOT ATTEMPT TO UNLOAD LINEAR DEMOLITION CHARGE CONTAINER FROM LAUNCHER FROM FRONT OR REAR OF LAUNCHER WHEN USING FORKLIFT.

NOTE

- **IF FORKLIFT IS USED, ADJUST FORKS TO FIT UNDER LIFTING SLING BAR INSIDE CABLE ATTACHING POINTS. IF CRANE IS USED, SECURE CRANE HOOK THROUGH CENTER HOLE OF LIFTING SLING.**
- **DO NOT USE THE SLING UNLESS A LOAD TEST HAS BEEN PERFORMED WITHIN THE PAST CALENDAR YEAR. PERFORM THE ANNUAL LOAD TEST BY LIFTING 5,300 POUNDS FOR A MINIMUM OF TWO (2) MINUTES.**

(9) Slowly lift linear demolition charge container (2) from launcher (5).

Legend:

(1) Lifting Sling
(2) Charge Container
(3) Snap Hooks
(4) Lifting Rings
(5) Launcher
(6) Detents
(7) Ball-lock Pins
(8) Pump Valve Lever

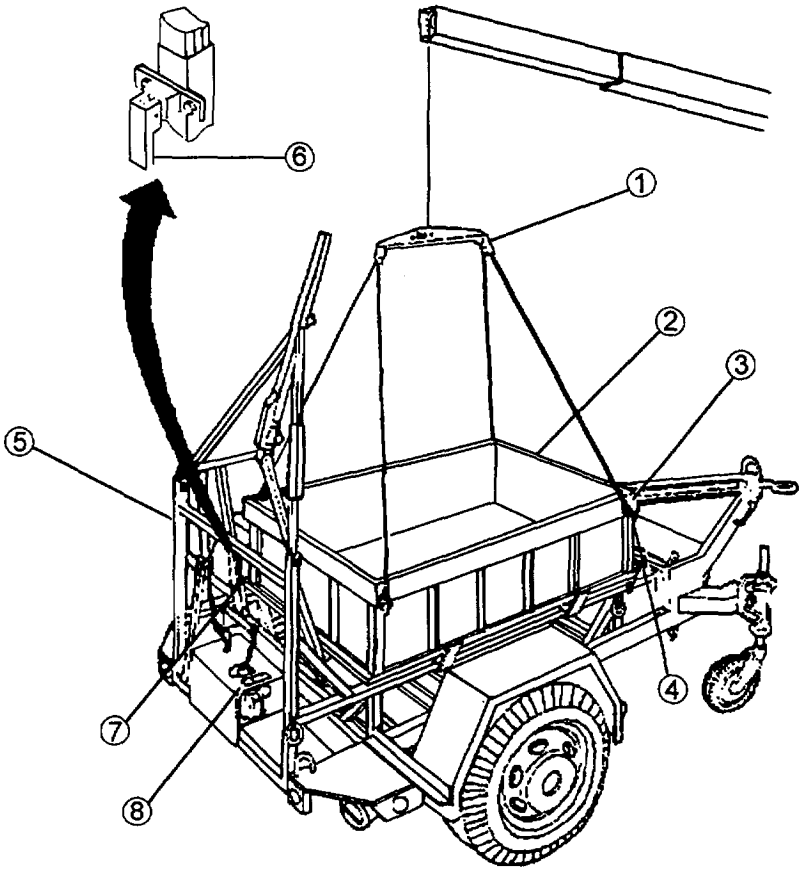

Figure 2.92. Removal of Charge Container from MK 155 Launcher

e. Secure Sling and Lower Rail

(1) Slowly lower linear demolition charge container (2)(see Figure 2.92) to the desired location.

(2) Remove four snap hooks (3) from four lifting rings (4).

(3) Return lifting sling (1) to storage container.

(4) Release detents (6) by pushing up on levers.

(5) Remove ball-lock pins (7).

(6) Move pump valve lever (8) slightly toward RELEASE position and slowly lower launcher rail to O°.

(7) Insert ball-lock pins (7) into LOCK position.

(8) Move pump valve lever (8) to the RELEASE position.

(9) Release the spring tension on detents (6) by pushing down on levers.

2.8.13 REMOVING LAUNCHER FROM TRAILER

a. Initial Setup

· **Tools and Special Tools**

- Forklift capable of lifting 2,000 lbs (908 kg)
- General Mechanic's Tool Kit, Army (NSN 5180-00-177-7033), Marine Corps (NSN 5180-00-606-3566)
- 15/16-inch deep well socket (NSN 5120-00-935-7452)
- Goggles (NSN 4240-00-052-3776)

· **Materials/Parts**

- Penetrating oil (NSN 9150-00-529-7518)

· **References**

- To Remove Launcher from AVLM (Appendix J)

· **General Safety Instructions**

- See warnings and cautions at front of this manual.

NOTE

DO NOT USE THE SLING UNLESS A LOAD TEST HAS BEEN PERFORMED WITHIN THE PAST CALENDAR YEAR. PERFORM THE ANNUAL LOAD TEST BY LIFTING 5,300 POUNDS FOR A MINIMUM OF TWO (2) MINUTES.

WARNING

- **DO NOT ALLOW LINEAR DEMOLITION CHARGE CONTAINER TO SWAY DURING REMOVAL TO AVOID INJURY TO PERSONNEL. MARINE CORPS RECOMMENDS USE OF ROPES TO CONTROL SWAYING.**
- **NEVER RAISE LAUNCHER RAIL BEYOND THE POINT WHERE THREADS START TO SHOW ON HYDRAULIC CYLINDER, ABOUT 75° ELEVATION OR THE HYDRAULIC CYLINDER MAY BE DAMAGED.**
- **WHEN USING FORKLIFT, DO NOT ATTEMPT TO UNLOAD LAUNCHER FROM FRONT OR REAR OF TRAILER.**

NOTE

WHEN REMOVING OR INSERTING BALL-LOCK PINS OR RELEASING DETENTS IT MAY BE NECESSARY TO RAISE OR LOWER LAUNCHER RAIL SLIGHTLY.

b. Raise Launcher Rail

(1) Remove ball-lock pins (1)(see Figure 2.93) from launcher rail supports. Let ball-lock pins hang from launcher rail supports.

(2) Move hydraulic control valve lever to MANUAL RAISE/LOWER position.

(3) Move pump valve lever (2) to HOLD position.

CAUTION

NEVER RAISE LAUNCHER RAIL BEYOND THE POINT WHERE THREADS START TO SHOW ON HYDRAULIC CYLINDER. HYDRAULIC CYLINDER MAY BE DAMAGED.

(4) Operate pump handle (3) to elevate rail. Raise rail until first thread is visible, about 75°.

(5) Insert ball-lock pins (1) into lock position.

(6) Replace ball-lock pins (1) in the LOCK position for safety.

Legend:

(1) Ball-Lock Pins
(2) Pump Valve Lever
(3) Pump Handle
(4) Cylinder Threads
(5) Four U-bolts
(6) Lifting Sling
(7) Launcher
(8) Snap Hooks
(9) Lifting Rings
(10) Trailer

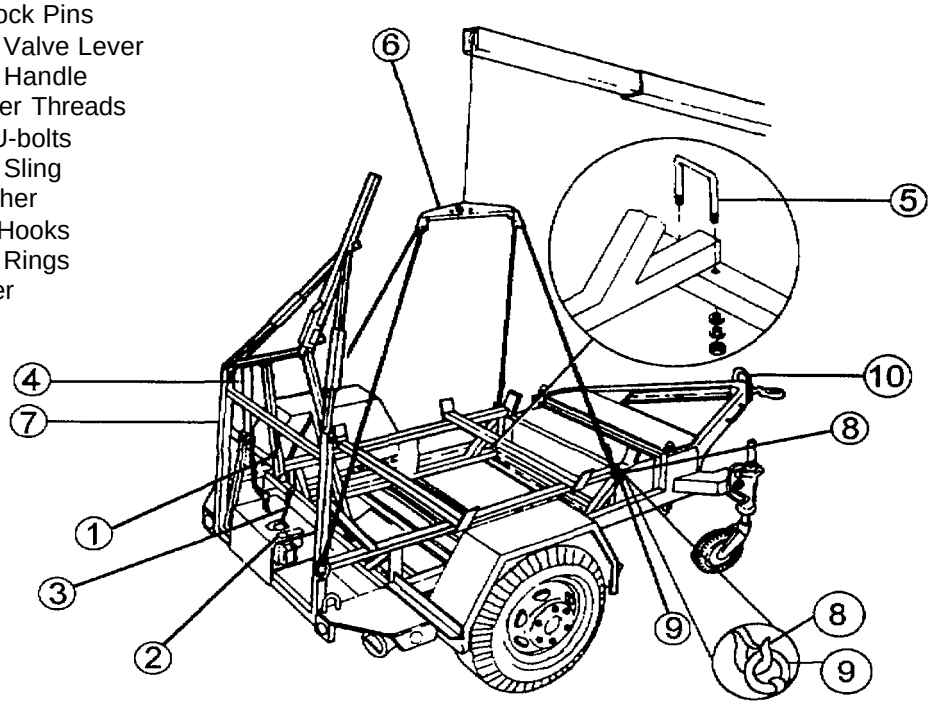

Figure 2.93. Removal of MK 155 Launcher from Trailer

c. Remove U-bolts from Launcher/Trailer

WARNING

WEAR PROTECTIVE GOGGLES WHILE WORKING UNDER TRAILER. IT IS RECOMMENDED THAT THE TRAILER WHEELS BE BLOCKED AND/OR BRAKE BE APPLIED TO PREVENT IT FROM ROLLING.

NOTE

APPLY PENETRATING OIL AS NECESSARY TO THREADS OF U-BOLT. ALLOW TIME FOR OIL TO WORK.

(1) Using 15/16-inch socket and socket wrench, remove two nuts, lockwashers, and flatwashers from each of four U-bolts (5)(see Figure 2.93) and store in storage container.

NOTE

CLEAN AND OIL U-BOLTS AND NUTS AND PLACE IN PLASTIC OR BARRIER BAG BEFORE EXTENDED STORAGE.

(2) Remove four U-bolts (5) and store in storage container.

d. Lift Launcher from Trailer

NOTE

DO NOT USE THE SLING UNLESS A LOAD TEST HAS BEEN PERFORMED WITHIN THE PAST CALENDAR YEAR. PERFORM THE ANNUAL LOAD TEST BY LIFTING 5,300 POUNDS FOR A MINIMUM OF TWO (2) MINUTES.

(1) Remove lifting sling (6)(see Figure 2.93) from storage container.

(2) Place lifting sling (6) on launcher (7) with its long axis parallel to the long axis of the launcher.

(3) Hook the four snap hooks (8), through four lifting rings (9) with hook tips facing outward.

WARNING

- **DO NOT ALLOW LAUNCHER TO SWAY DURING REMOVAL TO AVOID INJURY TO PERSONNEL. MARINE CORPS RECOMMENDS USE OF ROPE TO CONTROL SWAYING.**
- **WHEN USING FORKLIFT, DO NOT ATTEMPT TO UNLOAD LAUNCHER FROM FRONT OR REAR OF TRAILER.**

NOTE

IF FORKLIFT IS USED, ADJUST FORKS TO FIT UNDER LIFTING SLING BAR INSIDE CABLE ATTACHING POINTS. IF USING 5-TON WRECKER OR OTHER CRANE SECURE CRANE HOOK THROUGH CENTER HOLE OF LIFTING SLING.

(4) Slowly lift launcher (7) from trailer (10).

(5) Slowly lower launcher (7) to the desired location.

(6) Remove four snap hooks (8) from lifting rings (9).

(7) Return lifting sling (6) to storage container.

e. Lower Launcher Rail

(1) Release detents (1)(see Figure 2.94) by pushing up on levers.

(2) Remove ball-lock pins (2).

(3) Move pump valve lever (3) slightly toward RELEASE position and slowly lower launcher rail (4) to O°.

(4) Insert ball-lock pins (2) into LOCK position in launcher rail supports (5).

(5) Leave pump valve lever (3) in RELEASE position.

(6) Toggle pump valve lever (3) between MANUAL RAISE/LOWER and PRESSURIZE ACCUMULATOR positions until gage reads 0 psi.

(7) Release the spring tension on detents (1) by pushing down on levers.

Legend:

(1) Detent
(2) Ball-lock Pins
(3) Pump Valve Lever
(4) Launcher Rail
(5) Launcher Supports

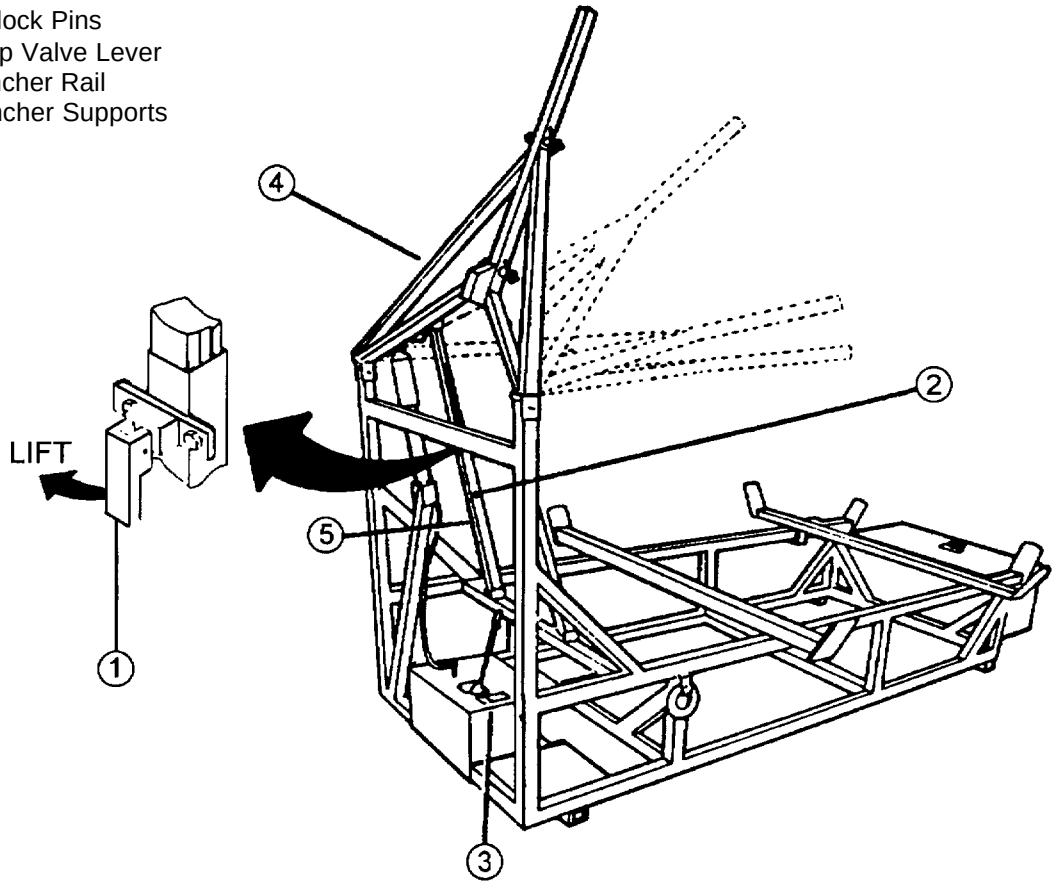

Figure 2.94. Lower MK 155 Launcher Rail

Section IV. OPERATION UNDER UNUSUAL CONDITIONS

2.9 CROSSWINDS AND HEADWINDS.

a. Crosswinds. Crosswinds of less then 25 mph (40 km) will not cause linear demolition charge layout to deviate more than a few degrees. With crosswinds of 25 mph (40 km) or higher velocity, allowance should be made for deviation in flight path and layout of the line charge. A deviation of about 10° from a true path can be expected with a 30 mph (48 km) wind perpendicular to the flight path. Allow about 5' for each additional 7 mph (11 km) of crosswind. Do not launch linear demolition charge in winds over 50 mph (81 km).

b. Headwinds. Headwinds may shorten length of layout pattern. If shortened length occurs, back up towing vehicle to straighten the lay of the linear demolition charge.

2.10 UPGRADES AND DOWNGRADES. Launching the linear demolition charge on an upgrade can reduce the range of the launch and can reduce the standoff between towing vehicle and the linear demolition charge. Reduced standoff will increase the blast effect on the towing vehicle and on those personnel within the vehicle. Launching of the linear demolition charge from a downgrade into a ravine/valley area can also reduce range and can reduce standoff due to rocket impacting the adjacent upgrade.

2.11 RIVER FORDING. Avoid getting linear demolition charge wet. A wet linear demolition charge weighs more than a dry one and will not go as far when launched. Because the initiating elements of both rocket and line charge are not absolutely waterproof, misfires may result.

2.12 WOODED AREAS. If the arresting cable is draped over a tree, the linear demolition charge standoff distance to the towing vehicle can be considerably reduced. This situation should be avoided. Linear demolition charges have been shot over wooded areas for defoliation purposes. Such detonation of the line charge above ground level increases the blast effect to the operator personnel. Therefore, shooting over wooded areas is not a normally authorized operation. No safety data is available, but operators must provide themselves with as much protection as possible, both from the blast and from flying debris from the trees.

2.13 NUCLEAR, BIOLOGICAL, AND CHEMICAL (NBC) ENVIRONMENT. The MICLIC has been proven operable by personnel in NBC protective clothing. The launcher and trailer are painted with a chemical agent resistant coating (CARC) and can, therefore, be fully decontaminated. A full lubrication must be given to both launcher and trailer after decontamination. The towing vehicle will not be NBC-proof because it is necessary to have the hatch open a little for the electrical cable and lanyard.

2.14 SNOW, SLEET, AND FREEZING RAIN. If it is necessary to launch a linear demolition charge in snow, sleet or freezing rain, the rocket should be elevated prior to being towed through such conditions, because these conditions could freeze the launcher rail supports together in the "down" position . Make sure the soft-cover is secure to keep the linear demolition charge from being frozen to itself and/or weighed down with ice.

2.15 TEMPERATURES BELOW -25°F (-32°C). Below -25°F (-32°C), the hydraulic system will become sluggish due to thickening of the fluid and especially due to the subsequent increased flow resistance through the fluid dampener. Under such conditions the rocket should be elevated before the MICUC is towed out of a protected area having moderate temperature. At such extremely low temperatures as below -25°F (-32°C), it may be necessary to take the fluid dampener out of the hydraulic system in order to get it to operate. Re-install the fluid dampener before operating the hydraulic system at higher temperatures.

2.16 DEPLOYMENT DURING EXTREME COLD WEATHER CONDITIONS (FOR MARINE CORPS ONLY).

a. General. Although the line charge and rocket motors are designed to operate in temperatures to -40° F, additional care and special handling are required for proper functioning and to minimize the possibility of damage to the line charges and rocket motors under these weather conditions.

b. References. FM 31-70 and FM 31-71 contain information pertinent to the operation of material under arctic conditions. Personnel responsible for the operation of the rocket motor and linear demolition charge under extreme cold weather conditions should become familiar with the contents of these publications.

c. Care and Handling

(1) Avoid unnecessary handling of the electrical cables. When handling of the electrical cables is required, do not bend, twist or flex them more than is absolutely required. Electrical cable insulation becomes brittle and subject to cracking at low temperatures and will become irreparably damaged by such actions.

(2) To keep the linear demolition charge in a "ready" status, remove accumulated ice and snow from the electrical connectors, the charge container safety switch at the rear of the charge container, the electrical receptacles and the launcher kit.

(3) Avoid placing the linear demolition charge and rocket motors in areas where freezing to the ground may take place (puddles, slush, ice, etc.).

2.17 DEPLOYMENT DURING EXTREME HOT WEATHER CONDITIONS.

a. General. Although the rocket motor and line charge are designed to operate in temperatures up to + 125 ° F, additional care and special handling are required for proper functioning and to minimize the possibility of damage to the rocket motor and line charge under these weather conditions.

b. Care and Handling

(1) Do not store or allow rocket motors to remain in direct hot sunlight for more than one hour. If a rocket motor has been so exposed, it must be returned to, and kept within the safe firing temperature limits for at least six hours before firing.

(2) Protect the line charge by keeping either the fabric or hard cover on the charge container to avoid direct contact with hot sunlight.

(3) Protect electrical cable from direct contact with hot metal surfaces of host vehicle and launcher. Excessive heat could cause damage to cable's protective covering.

2.18 BLOWING DIRT AND SAND. Minimize exposure of the launcher, rocket and linear demolition charge to blowing dirt and sand. If possible, cover the whole assembled MICLIC with a tarp until approaching target. After use in such conditions, clean all moving parts, using compressed air, steam, etc., as needed. Disassemble launch rail supports, if necessary, to remove accumulated dirt. Perform lubrication per Table 3.1 immediately after cleaning.

2.19 FIRING WITH M200A1 or M353 WHEELED TRAILER DETACHED FROM TOW VEHICLE. See para. 2.8.4b or para. 2.8.6b.

WARNING

THE ARRESTING CABLE IS UNDER GREAT TENSION AFTER THE LINEAR DEMOLITION CHARGE IS DEPLOYED AND, IN THE CASE OF THE INERT PRACTICE CHARGE WILL REMAIN UNDER TENSION. THE TENSION IS SO GREAT THAT THE TRAILER WILL BE JERKED FORWARD SEVERAL FEET IF THE CHOCKS ARE REMOVED, EVEN WITH THE BRAKES STILL SET. ASSURE ALL TENSION HAS BEEN REMOVED FROM THE ARRESTING CABLE PRIOR TO DISCONNECTING M68A2 LINEAR DEMOLITION CHARGE TRAINING FUZE.

CHAPTER 3
OPERATOR MAINTENANCE

Section I. LUBRICATION INSTRUCTIONS

3.1 LUBRICATION INSTRUCTIONS. Operator lubrication of MICLIC is an important part of the preventive maintenance checks and services in Table 2.5. The operator should lubricate all of the items listed in Table 3.1, paragraph 2.3 IAW the information in Table 3.1. The estimated man-hour requirements to lubricate the MICLIC are found in Table 3.2. Check the hydraulic fluid in the hand pump (item 6) and fill the proper level. See Figure 3.2 and 3.3 for location of lubrication points. Table 3.3 provides information about the properties of required lubricants and the quantity of lubricants to be used. The lowest level authorized to lubricate a point is Operator/Crew level.

Table 3.1. Lubrication Requirements for MICLIC Launcher

	LUBRICATION POINT	LUBRICANT	INTERVAL
1	Launcher Rail Groove	GAA	AQ
2	Hand Knob Assembly	OEA or OE/HDO	AQ
3	Cross Piece Assembly	OEA or OE/HDO	AQ
4	Rocket Release Cam	OEA or OE/HDO	AQ
5	Joint	OEA or OE/HDO	AQ
6	Hydraulic Hand Pump Service	OHT	BAQ
7	Drain and Fill	OHT	S
8	Pump Handle Socket	GAA	AQ
9	Detent (2)	OEA or OE/HDO	AQ
10	Launcher Rail Support (2)	OHT	AQ
11	Rocket Release Mechanism	OEA or OE/HDO	AQ
12	Remote Trailer Disconnect	GAA, OEA, or OE/HDO	AQ
13	Alignment Pins	OEA or OE/HDO	AQ
14	Safety Switch Roller	OEA or OE/HDO	AQ

Table 3.2. Required Man-Hour Requirements for Lubrication

TOTAL MAN-HR	
INTERVAL	MAN-HR
B - Before Use	0.1
A - After Use	0.2
Q - Quarterly	0.2
S - Semi Annual	0.5

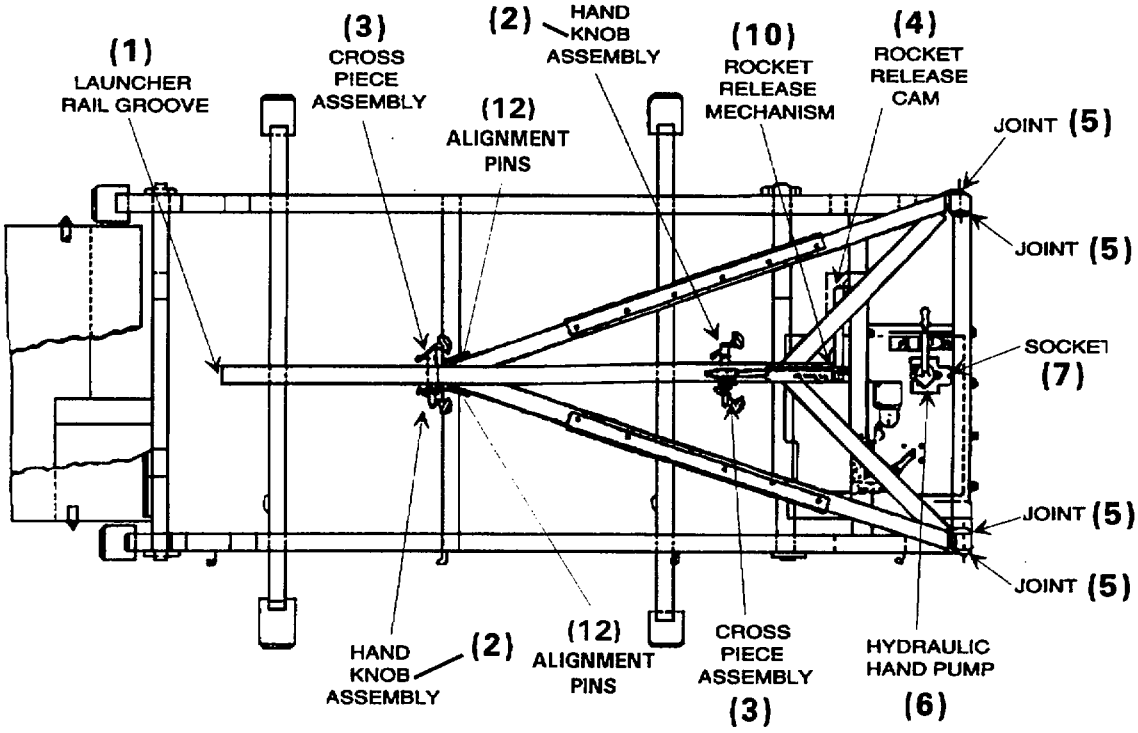

Figure 3.1. Lubrication Points for Launcher Assembly - Top View

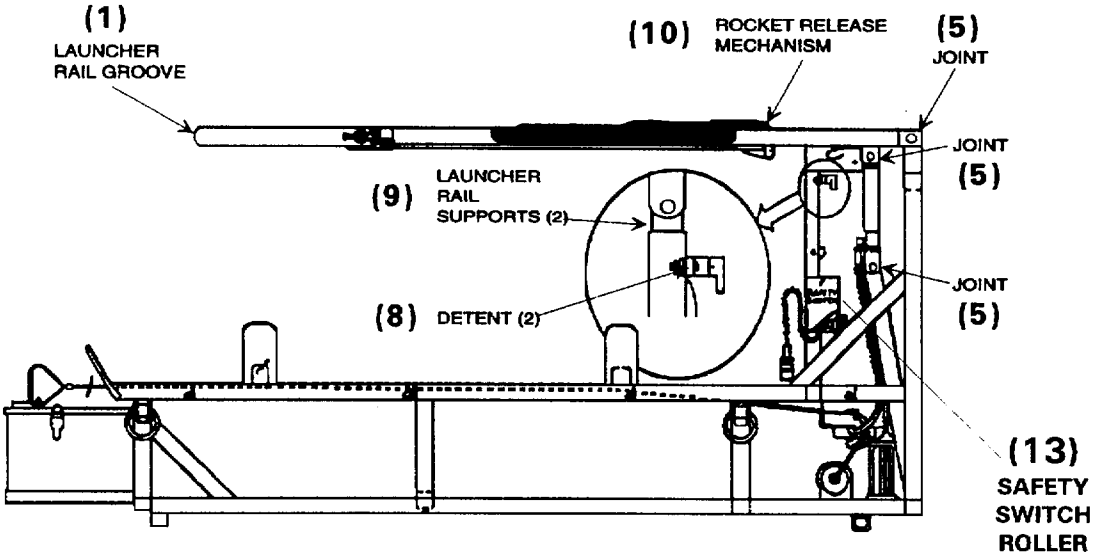

Figure 3.2. Lubrication Points for Launcher Assembly - Side View

Table 3.3. Information About Lubricants for MICLIC

LUBRICANTS		CAPACITIES	OILS AND CORRESPONDING NSN'S FOR EXPECTED TEMPERATURES		
			Above 15° F (Above -9°C)	40°F to -15°F (+4°C to -26°C)	40°F to -65F (+4°C to -54°C)
OE/HDO (MIL-L-104)	Lubricating Oil, ICE, Tactical Service	1 qt	OE/HDO-10 (0-237) 9150-01-177-3988		
OEA (MIL-46167)	Lubricating Oil, ICE, Arctic				OIA (0183) 9150-00-402-2372
GAA (MIL-G-10924)	Grease, Automotive and Artilery		GAA (G-403) 9150-01-197-7688 9150-01-197-7689		
OHT (MIL-H-6803)	Hydraulic Fluid Petroleum Base for Preservation and Operation		OHT (C-635) 9150-00-935-9808 9150-00-935-9807		
	Pump Reservoir	2-1/2 qt			
	Total Hydraulic System	3-1/2 qt			

Table 3.4. Lubrication Requirements for Remote Trailer Disconnect

B-Before Operation **A-After Operation** **Q-Quarterly**

LUBRICATION POINT	LUBRICANT	INTERVAL
(1) Thumbscrew Holes	GAA	AQ
(2) Hinges	OEA or OE/HDO	AQ
(3) Roller Carriage	OEA or OE/HDO	AQ
(4) Jaw Pivot	OEA or OE/HDO	AQ

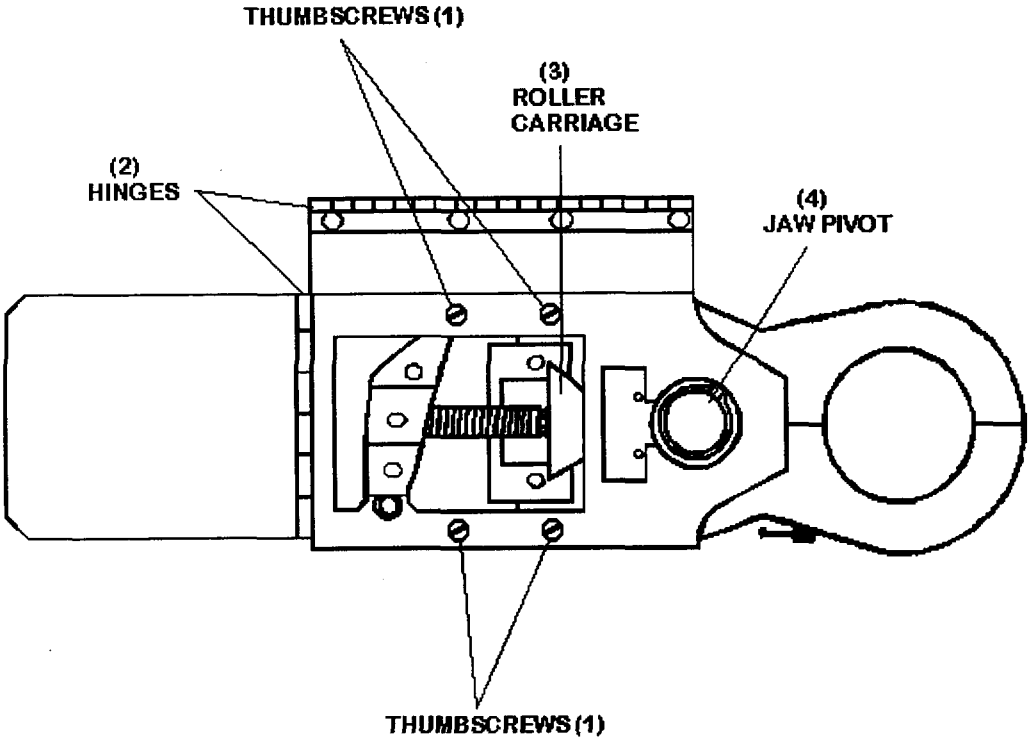

Figure 3.3. Maintenance of Remote Trailer Disconnect

Section II. TROUBLESHOOTING PROCEDURES

3.2 INTRODUCTION. The following projects probable faulty conditions and the corrective action for each.

3.3 FUZE CANNOT BE ASSEMBLED ON LINEAR DEMOLITION CHARGE

3.3.1 CORRECTIVE ACTION

a. Check all mating surfaces for dirt, corrosion, burrs. Clean surfaces, remove burrs.

b. Remove fuze (1) and arresting cable fuze connector (2) from linear demolition charge fuze connector shaft (3)(See Figure 3.7) Take note of the position of the arresting cable fuze connector/fuze assembly. Rotate the arresting cable fuze connector/fuze assembly 180 degrees and reinsert onto the linear demolition charge fuze connector shaft. If the ball lock pin can not be fully inserted, proceed to Step 3.

c. Remove fuze (1) and arresting cable fuze connector (2) from linear charge fuze connector (3). Using a 3/32 inch allen wrench back out the two set screws (4) on the linear charge fuze connector (3), until the set screws are not visible (approximately 3 turns). Reinsert the arresting cable fuze connector (2) /fuze (1) assembly onto the linear charge fuze connector (3). If the ball lock pin can be fully inserted and the fuze assembly can not be pulled apart, then screw the set screws in until they stop. If the ball lock pin can not be fully inserted, return the M58 Linear Demolition Charge to the ASP.

Legend:

(1) Fuze
(2) Arresting Cable, Fuze Connector, Rear Half
(3) Charge, Fuze Connector, Front Half
(4) Set Screw
(5) Front of Fuze

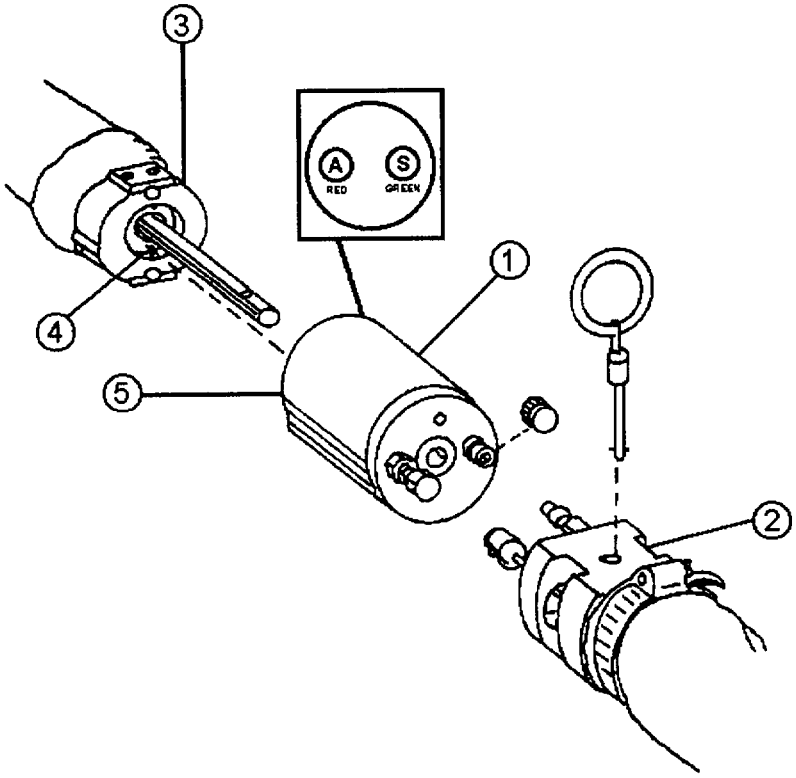

Figure 3.4. Troubleshooting Inert Fuze

3.4 INERT FUZE DAMAGED DURING DEPLOYMENT

3.4.1 INSPECTION. Spring loaded mechanical arming rod pulled out.

3.4.1.1 Corrective Action. Depress pin (1)(see Figure 3.9) on arming wire connector (2) and push arming wire connector into fuze (3). This resets the inert fuze.

Legend:

(1) Pin
(2) Arming Wire Connector (Armed)
(3) Arming Wire Connector (Unarmed/Reset)

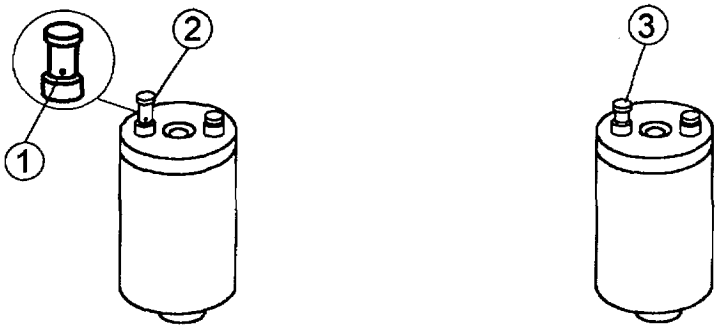

ARMED FUZE UNARMED FUZE RESET

Figure 3.5. Re-arming Fuze for M68

3.4.2 CONDITION. Burrs on exterior body of training fuze and/or metal displaced on the two channel guides (1) (see Figure 3.9) at front end of fuze (2).

Legend:

(1) Channel guides
(2) Front end of fuze

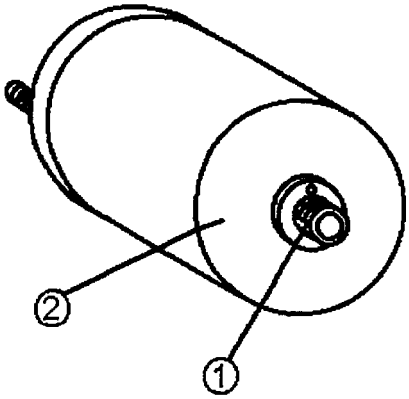

Figure 3.6. Front End of Fuze

3.4.2.1 Corrective Action. Using a file or abrasive paper, dress the burrs to remove raised metal and straighten the inner walls of the channels.

3.4.3 CONDITION. Ball lock pin is bent to the extent it cannot be removed by hand.

3.4.3.1 Corrective Action. Drive the ball lock pin out with a punch. Replace the ball lock pin. Replacement pin can be obtained from an expended inert linear charge or an expended live linear charge.

3.4.4 CONDITION. With the ball lock pin removed, the fuze will not slide off the linear demolition charge fuze connector shaft, i.e., impact bent the shaft.

3.4.4.1 Corrective Action. Loosen and slide back the hose clamp 11)(see Figure 3.11) on the linear demolition charge fuze connector. The shaft is secured to the mounting block by a tapered pin (2). Drive pin far enough out so the shaft can be removed. Slide the fuze off this end of the shaft. Place the shaft in a vise to straighten. Reinstall tapered pin to original position, resecure hose clamp.

Legend:

(1) Hose Clamp
(2) Tapered Pin

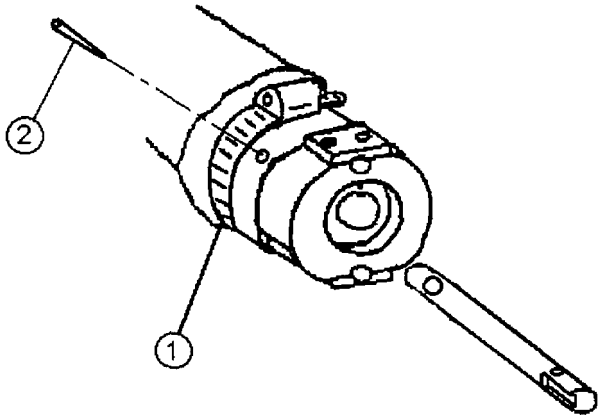

Figure 3.7. Charge Fuze Connector

3.5 CONTINUITY TEST TROUBLESHOOTING GUIDE MOD 0/1, REMOVAL OF TAPERED PIN. If discrepancies exist when performing the continuity procedure, clean and tighten all connections and repeat the entire continuity procedure. If discrepancies still exist, use the following table to isolate the problem. In Steps 3 and 4, you will need to test the continuity with the Selector Switch in the ROCKET position then in the CHARGE position. Use the Table 3.5 to match up the indications, i.e., Light in each position, No Light in each position, and read across for the most likely cause of the problem.

Table 3.5. MOD 0/1 Continuity Test Troubleshooting

Step	Selector Switch Position	Launch Rail Position	M51 Test Set Indication	Corrective Action
1	OFF	Down	No Light	Proper indication
	OFF	Down	Light	Improper indication. Most likely a problem with selector switch. Have unit/organizational maintenance perform continuity check on selector switch.
2	POWER	Down	Light	Proper indication
	POWER	Down	No Light	Improper Indication Most likely a problem with selector switch or cable No. 3. Have unit/organizational maintenance perform continuity check on selector switch and cable No. 3.
3	ROCKET CHARGE	Down Down	No Light No Light	Proper Indication
	ROCKET CHARGE	Down Down	Light Light	Improper Indication. Most likely a problem with safety switch. Have unit/organizational maintenance test and adjust safety switch.
	ROCKET CHARGE	Down Down	No Light No Light	Improper Indication. Indicates a portion of the circuitry is grounded. Have unit/organizational maintenance perform continuity check on selector switch and/or cable No. 3.

Table 3.5. MOD 0/1 Continuity Test Troubleshooting (Cont)

Step	Selector Switch Position	Launch Rail Position	M51 Test Set Indication	Corrective Action
	ROCKET CHARGE	Down Down	Light No Light	Improper Indication. Indicates a portion of the circuitry is grounded. Have unit/organizational maintenance perform continuity check on selector switch and/or cable No. 3.
4	ROCKET CHARGE	Up Up	Light Light	Proper Indication
	ROCKET CHARGE	Up Up	No Light No Light	Improper Indication Most likely a problem with safety switch. Have unit/organizational maintenance test and adjust safety switch.
	ROCKET CHARGE	Up Up	No Light Light	Improper Indication. Indicates a portion of the circuitry is grounded. Have unit/organizational maintenance perform continuity check on selector switch and cable No. 3.

3.6 MOD 2/3 CONTINUITY TEST TROUBLESHOOTING GUIDE. If discrepancies exist when performing the continuity procedure, clean and tighten all connections and repeat the entire continuity procedure. If discrepancies still exist, use the following table to isolate the problem. In Steps 1 and 3, test the continuity with the Selector Switch in the SAFE, ROCKET, and CHARGE positions. Use the Table 3.6 to match up the indications, i.e., Light in each position, No Light in each position, and read across for the most likely cause of the problem.

Table 3.6. MOD 2/3 Continuity Test Troubleshooting

Step	Selector Switch Position	Launch Rail Position	M51 Test Set Indication	Corrective Action
1	POWER TOGGLE SWITCH ON	Down	Power Light ON	Proper indication
	POWER TOGGLE SWITCH ON	Down	Power Light OFF	Improper Indication. Check NATO connector for correct installation. Press selector switch assembly RESET button. Check that vehicle battery disconnect switch is in proper position. Check that indicator light bulb has not burnt out. If Power Light is still OFF, see if launch rail can be raised. If not, have unit/organizational maintenance perform continuity check on selector switch assembly.
2	SAFE ROCKET CHARGE	Down Down Down	No Light No Light No Light	Proper indication
	SAFE ROCKET CHARGE	Down Down Down	Light Light Light	Improper indication. Indicates a problem with safety switch. Have unit/organizational maintenance test and adjust safety switch.
	SAFE ROCKET CHARGE	Down Down Down	Light No Light No Light	Improper indication. Have unit/organizational maintenance perform continuity tests on W3 cable, W5 cable, and selector switch assembly.

Table 3.6. MOD 2/3 Continuity Test Troubleshooting (Cont)

Step	Selector Switch Position	Launch Rail Position	M51 Test Set Indication	Corrective Action
	SAFE ROCKET CHARGE	Down Down Down	No Light Light No Light	Improper indication. Have unit/organizational maintenance perform continuity tests on W3 cable, W5 cable, and selector switch assembly.
	SAFE ROCKET CHARGE	Down Down Down	No Light No Light Light	Improper indication. Have unit/organizational maintenance perform continuity tests on W3 cable, W5 cable, and selector switch assembly.
	SAFE ROCKET CHARGE	Down Down Down	Light No Light Light	Improper indication. Have unit/organizational maintenance perform continuity tests on W3 cable, W5 cable, and selector switch assembly.
	SAFE ROCKET CHARGE	Down Down Down	Light Light No Light	Improper indication. Have unit/organizational maintenance perform continuity tests on W3 cable, W5 cable, and selector switch assembly.
	SAFE ROCKET CHARGE	Down Down Down	No Light Light Light	Improper indication. Have unit/organizational maintenance perform continuity tests on W3 cable, W5 cable, and selector switch assembly.

Table 3.6. MOD 2/3 Continuity Test Troubleshooting (Cont)

Step	Selector Switch Position	Launch Rail Position	M51 Test Set Indication	Corrective Action
3	ROCKET CHARGE	Up Up	Light Light	Proper Indication
	ROCKET CHARGE	Up Up	No Light No Light	Improper Indication Indicates a problem with safety switch. Have unit/organizational maintenance test and adjust safety switch.
	ROCKET CHARGE	Up Up	Light No Light	Improper Indication. Indicates a portion of the circuitry is grounded. Have unit/organizational maintenance perform continuity check on W3 cable, W5 cable, and selector switch assembly.
	ROCKET CHARGE	Up Up	No Light Light	Improper Indication. Indicates a portion of the circuitry is grounded. Have unit/organizational maintenance perform continuity check on W3 cable, W5 cable, and selector switch assembly.

Section III. MAINTENANCE PROCEDURES

3.7 SERVICING ELECTRICAL CONNECTORS AND RECEPTACLES

a. Initial Setup

- Materials/Parts

  - Wiping rags (NSN 7920-00-205-1711)
  - Denatured alcohol (NSN 6810-00-543-7415)

b. Inspection/Cleaning Electrical Connectors and Receptacles

(1) Remove protective caps from electrical receptacles.

(2) Using a clean rag, wipe inside of receptacle to remove any dust, debris or moisture.

(3) Apply small amount of denatured alcohol to the rag and clean any corrosion off the pins.

WARNING

DENATURED ALCOHOL IS FLAMMABLE. KEEP AWAY FROM IGNITION SOURCES. USE IN WELL-VENTILATED AREA.

(4) Using a dry rag, wipe inside of protective cap and reinstall cap on the receptacle.

3.8 REPACK M68A2 INERT LINEAR DEMOLITION CHARGE

a. Initial Setup

- **Materials/Parts**

  - Filament Tape (NSN 7510-00-159-44501
  - Knife
  - Masking Tape (NSN 7510-00-198-5831)
  - Permanent Ink Marker or Paint
  - Men's Gloves (NSN 8415-00-634-4660)
  - Wiping rags (NSN 7920-00-205-1711)

- **General Safety Instructions**

  - Wiping rags (NSN 7920-00-205-1711)

WARNING

WEAR LEATHER GLOVES OR EQUIVALENT WHEN REPACKING CHARGE.

b. Inspection/Cleaning of a Deployed M68 Inert Linear Demolition Charge

(1) Clean linear charge container, hardcover and linear demolition charge to remove dust, mud, and dirt. Ensure water has not accumulated in bottom of container.

(2) Inspect linear charge, arresting cable and fuze IAW Table 3.7 below. Remove any foreign debris caught in the linear charge nylon sleeve. Repair tears/rips in the nylon sleeve with filament tape. Wrap tape around nylon sleeve being careful not to apply tape around the inner/core cable.

Table 3.7. Inspection of a Used (Deployed) (Launched) M68 Inert Linear Demolition Charge

Item No.	Inspection/Procedure	Not Fully Mission Capable If:
1.	Check length of arresting cable for cuts/damage.	In any 1 inch section, two or more strands of the cable are completely cut. Do not deploy linear demolition charge again. Send to Defense Reutilization Management Office (DRMO).
2.	Check length of linear demolition charge for cuts/damage to inner cable.	Inner cable is severed.
3.	Reset arming wire connector IAW paragraph 3.4.1.1	
4.	Check that the fuze can be reassembled onto linear demolition charge fuze connector and arresting cable fuze connector.	Ball lock pin cannot be fully inserted. See troubleshooting procedures (para 3.2). If fuze cannot be fixed, send linear demolition charge to DRMO.
5.	Check electrical wire and arming wire under nylon sock to ensure they are not broken/damaged.	

c. Repacking of Arresting Cable

(1) Secure arresting cable snap hook to welded ring (1) (See Figure 3.11) on rear wall of the linear charge container. Allow arresting cable (2) to run straight down rear wall, then run across bottom of the container to the side wall. Allow the linear demolition charge electrical lead (3) to hang over the rear wall of the container.

(2) Flake the arresting cable from side wall to side wall of container (4), starting at rear of container. Use masking tape to tape loops of arresting cable together (5) to maintain the flaked position. Do not use filament tape for this step.

Legend:

(1) Snap hook secured to welded ring
(2) Arresting Cable
(3) Linear charge electrical lead
(4) Flaking from side wall to side wall
(5) Tape loops
(6) Plastic sheet
(7) Arresting Cable Fuze Connector

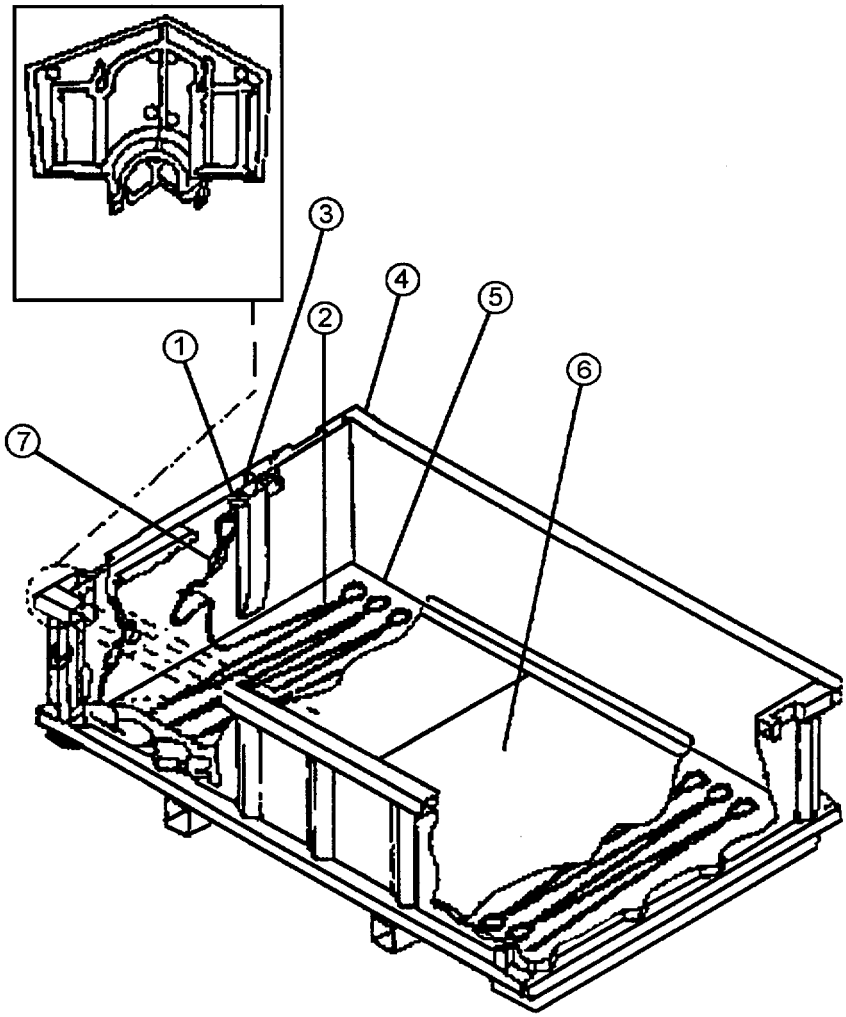

Figure 3.8. Repacking of Arresting Cable

(3) When front of container or arresting cable fuze connector is reached, place plastic sheet (6) on top of packed arresting cable. Tape one side of plastic sheet to side wall of container using reinforced tape.

NOTE

THE M68 WILL COME PACKAGED WITH A PLASTIC SHEET BETWEEN THE ARRESTING CABLE AND LINEAR DEMOLITION CHARGE. THIS SHEET NORMALLY STAYS IN THE CONTAINER DURING DEPLOYMENT. IN OTHER CASES IT WILL BECOME TANGLED WITH THE ARRESTING CABLE DURING DEPLOYMENT AND BE CARRIED DOWNRANGE. RECOVER AND REUSE THE PLASTIC SHEET.

(4) Position the arresting cable fuze connector (7) at the rear of the container near the fuze holder. Allow enough slack so the arresting cable fuze connector can be positioned on top of the linear demolition charge after it is packed.

d. Repacking Linear Charge

(1) Place the linear demolition charge fuze connector below the fuze holder in the corner of the container (see Figure 3.13).

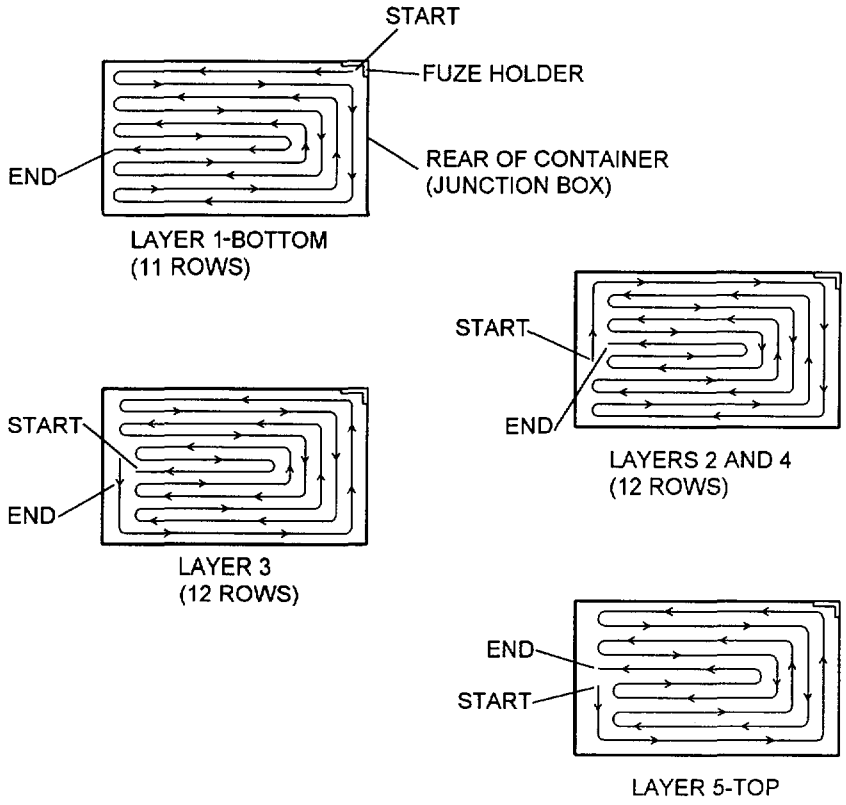

Figure 3.9. Repacking the Linear Charge

(2) Flake the linear charge into the container in a U shaped pattern (See Figure 3.13). The first layer will have 11 rows of linear charge. The second, third and fourth layers will have 12 rows. The fifth layer will have a maximum of 11 rows.

NOTE

- **TO MAKE TURNS, IT MAY BE NECESSARY TO REMOVE RUBBER BLOCKS BY CUTTING THE NYLON SLEEVE. REPAIR THE SLEEVE WITH FILAMENT BEFORE PROCEEDING.**

- **IF RUBBER BLOCKS CAN NOT BE REPOSITIONED SO THEY LAY FLAT, CUT THE NYLON SLEEVE, REMOVE THE BLOCK, AND REPAIR THE SLEEVE WITH FILAMENT TAPE.**

(3) Put the linear demolition charge electrical lead (1) in the container (See Figure 3.13).

(4) Place the arresting cable fuze connector (2) on top of the charge.

(5) Tape the spare parts kit to the rear wall of the container.

(6) Repackage the fuze (3) and place in center of the charge.

(7) Using two personnel, lift and place lid on the container. Secure the lid with bungee straps.

(8) Use permanent ink or paint to mark "CHARGE FIRED" and the date on the exterior rear wall of the container.

(9) The M68 Inert Linear Demolition Charge should be fired a maximum of three times. After three firings the charge should be turned in to local DRMO for disposal.

Legend:

(1) Linear Charge, Electrical Lead
(2) Arresting Cable, Fuze Connector
(3) Fuze

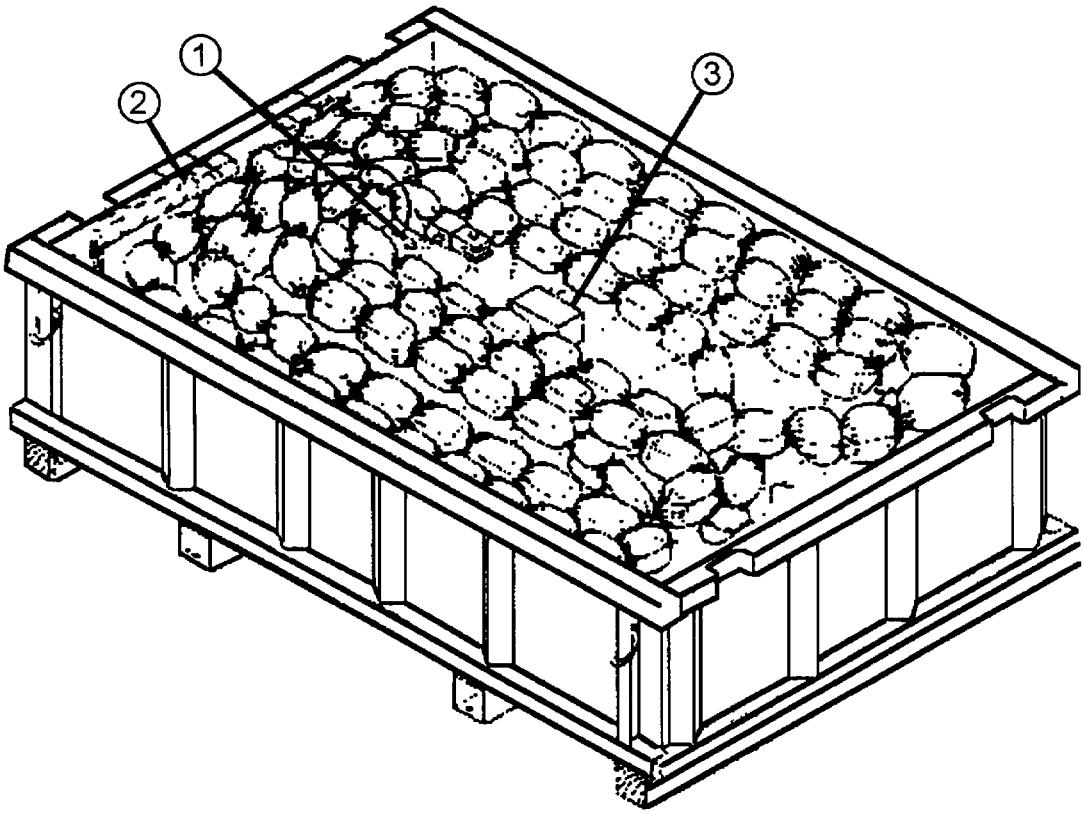

Figure 3.10. Location of Line Charge Components

CHAPTER 4
UNIT MAINTENANCE

Section I. REPAIR PARTS, TOOLS; SPECIAL TOOLS; TEST, MEASUREMENT, AND DIAGNOSTIC EQUIPMENT (TMDE); AND SUPPORT EQUIPMENT

4.1 COMMON TOOLS AND EQUIPMENT. For authorized common tools and equipment, refer to the Modified Table of Organization and Equipment (MTOE), CTA 50-970, or CTA 8-100, applicable to your unit.

4.2 SPECIAL TOOLS, TMDE, AND SUPPORT EQUIPMENT. Refer to Maintenance Allocation Chart (MAC) in Appendix B, and to the Repair Parts and Special Tools List (RPSTL) in Appendix F.

4.3 REPAIR PARTS. Appendix F lists and illustrates Launcher repair parts and replaces Marine Corps SL-4-08982A stocklist.

4.4 GENERAL. The MICLIC system consists of three major components: the MK 155 launcher, MK 22 MOD 3/4 rocket, and the M58A3/A4 (HE) or M68A2 (inert) linear demolition charge. The M68A2 (inert linear demolition charge) is used for training only. Ammunition Supply Points (ASP) supply the rocket and the linear demolition charge. Maintenance procedures in this chapter deal with the launcher.

Section II. SERVICE UPON RECEIPT

4.5 SERVICE UPON RECEIPT OF MATERIEL. Upon receipt of launcher for maintenance, verify PMCS Class I, II, and III hydraulic leaks as defined below:

- Class I - Seepage of fluids (as indicated by wetness or discoloration) not great enough to form drops.
- Class II - Leakage of fluid great enough to form drops but not enough to cause drops to drip from item being checked/inspected.
- Class III - Leakage of fluid great enough to form drops that fall from the item being checked/inspected.

a. Inspect the equipment for damage incurred during shipment. If the equipment has been damaged, report the damage on SF 364, Report of Discrepancy, or AR 55-38, Report of Transportation Discrepancies in Shipments.

b. Check the equipment against the packing slip to see if the equipment is complete. Report all discrepancies in accordance with the instructions of DA Pam 738-750 or DA Pam 738-751, as applicable.

c. Inspect and operationally test the launcher before using it. Externally inspect the M58A3/A4 (HE) or M68A2 (inert) linear demolition charge container and the MK 22 MOD 3/4 rocket motor box.

d. Initial Setup

- **Tools and Special Tools**
  - Band Cutter
  - Knife, Pocket
- **General Safety Instructions**
  - See warnings that follow.

WARNING

- **PERSONNEL NEAR STEEL BANDING OR BAND CUTTING OPERATIONS WILL WEAR GOGGLES. OPERATORS HANDLING METAL BANDING WILL ALSO WEAR LEATHER OR LEATHER-PALMED GLOVES.**

- **BEFORE ATTEMPTING TO CUT BANDING, ENSURE THAT HYDRAULIC VALVE LEVER IS IN THE "MANUAL RAISE/LOWER" POSITION AND THAT "HOLD/RELEASE PUMP VALVE" IS IN THE "RELEASE" POSITION. THIS WILL PREVENT THE RAIL FROM RAISING WHEN BANDING IS CUT IN THE EVENT THAT THE SYSTEM IS UNDER PRESSURE.**

e. Unpacking Launcher:

(1) Remove plastic cover.

(2) Cut banding (1) (see Figure 4.1) with band cutter.

Legend:

(1) Banding

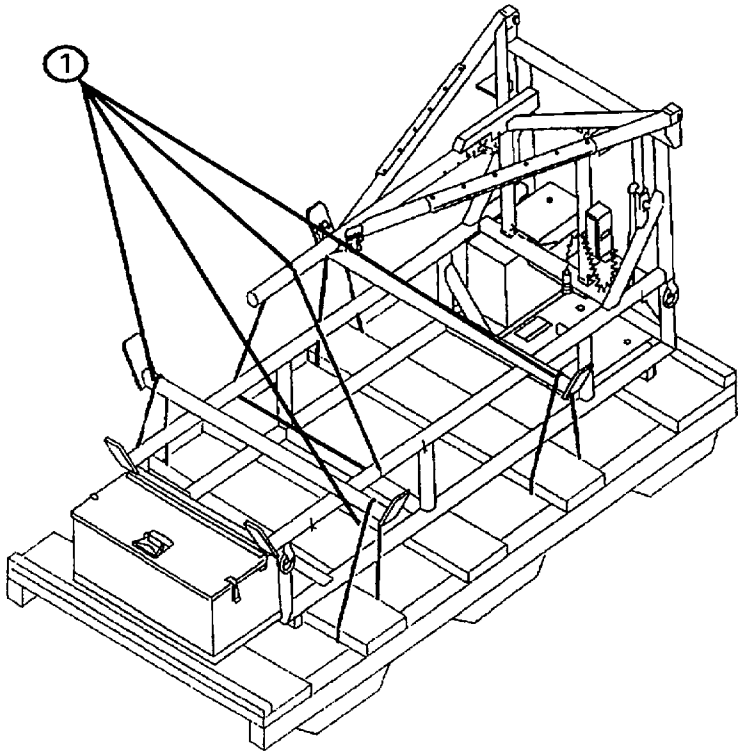

Figure 4.1. Unpackaging MK 155 Launcher

f. Inspect Launcher

(1) Inspect launcher rail groove (1), (see Figure 4.2) alignment pin assemblies (2), hand knob assemblies (3) and cable sheathes (4) for damage or corrosion. Perform PMCS as necessary (Table 2.5}.

NOTE

CABLE SHEATHS ARE MADE FROM THIN METAL AND CAN BE EASILY BENT. IF DISTORTION IS NOT GREAT, STRAIGHTEN THE SHEATHS BY HAND. REPLACE BADLY BENT OR DAMAGED SHEATHS (PARA 4.10).

(2) Inspect launcher rail supports (5) for wear, damage or corrosion. Perform pressure check-out (para 2.5.1) to inspect for operation or corrosion. Lower launcher rail. Service or replace components as necessary.

Legend:

(1) Rail Groove
(2) Alignment Pin Assemblies
(3) Hand Knob Assemblies
(4) Cable Sheathes
(5) Rail Supports

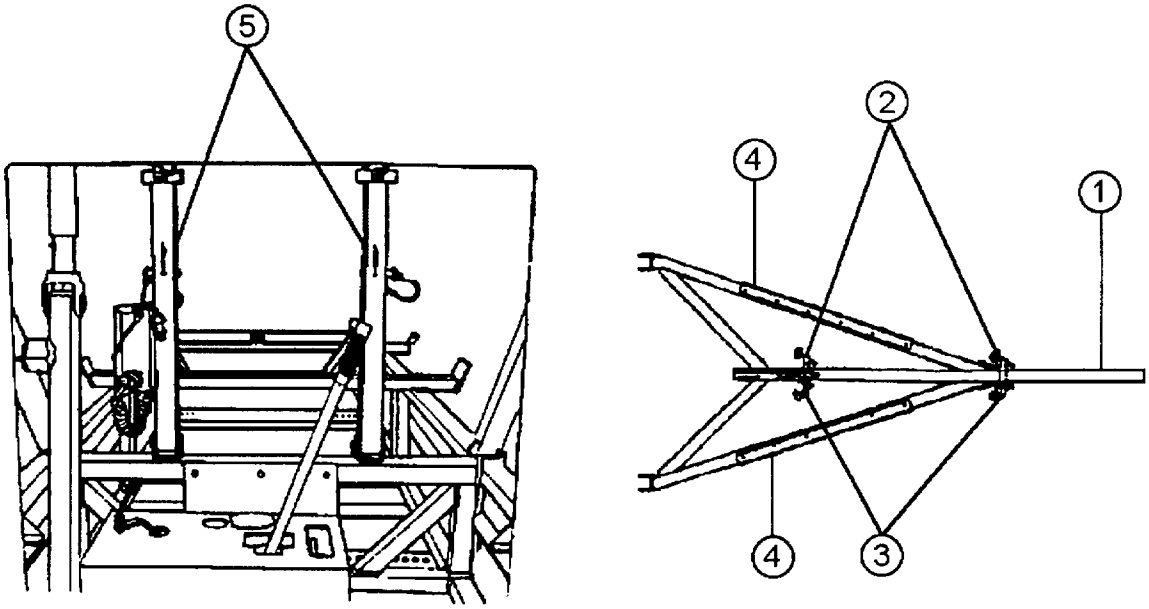

Figure 4.2. Inspect MK 155 Launcher Components

(3) With launcher rail at O°, check fluid level in hand pump (1) (see Figures 4.3 and 4.4) by observing dipstick (2) and refill with hydraulic fluid (MIL-H-6083) as needed. If dipstick is not present, fluid should be 4 inches from top of fill hole.

(4) Inspect hydraulic lines (3), accumulator (4), hydraulic cylinder (5), hose (6), hand pump (1), hydraulic control valve (7) and solenoid valve (8) on MOD 2 and MOD 3 launchers for leakage. Replace class II leaking components as necessary. Ensure accumulator is pressurized to 2,250 psi (see paragraph 2.6.1). Accumulator with pressure below 2,250 psi will require re-charging by support maintenance.

Legend:

(1) Hydraulic Hand Pump
(2) Dipstick
(3) Hydraulic Lines
(4) Accumulator
(5) Hydraulic Cylinder
(6) Hose
(7) Hydraulic Control Valve

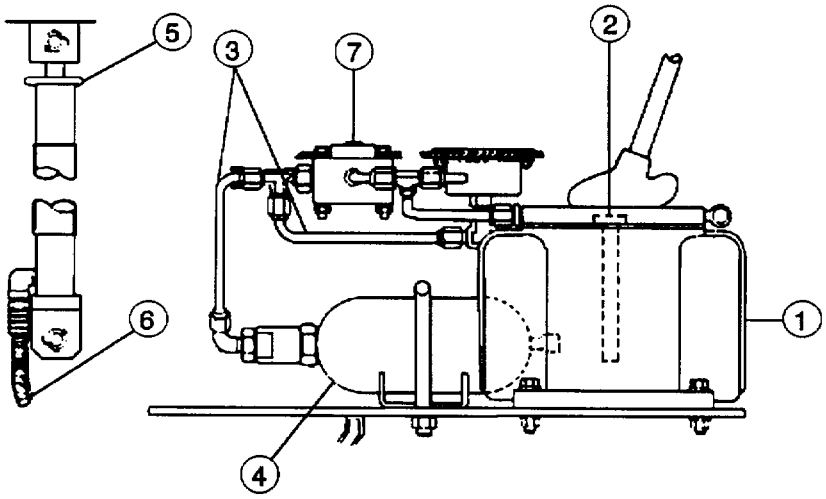

Figure 4.3. End View of MOD 0 and MOD 1 Hydraulic Components

Legend:

(1) Hydraulic Hand Pump
(2) Dipstick
(3) Hydraulic Lines
(4) Accumulator
(5) Hydraulic Cylinder
(6) Hose
(7) Hydraulic Control Valve
(8) Solenoid Valve

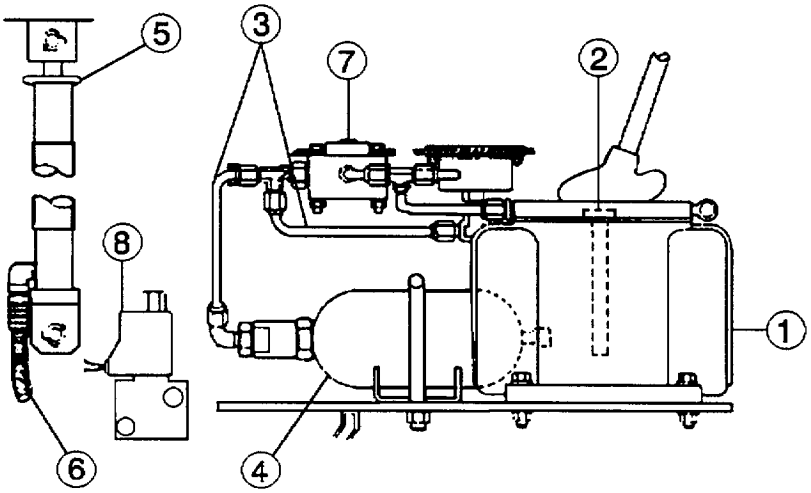

Figure 4.4. End View of MOD 2 and MOD 3 Hydraulic Components

(5) Inspect storage container(s) for soft cover, clevis assemblies, turnbuckles, M34 blasting machine, M51 test set, lifting sling, lanyard, selector switch assembly, electrical cables, trailer disconnect device (if MOD 2 or MOD 3 launcher) and four U-bolt assemblies, (four U-bolts, eight flatwashers, eight lockwashers and four nuts).

WARNING

PERSONNEL NEAR STEEL BANDING OR BAND CUTTING OPERATIONS WILL WEAR GOGGLES/FACE SHIELDS. OPERATORS HANDLING METAL BANDING WILL ALSO WEAR LEATHER OR LEATHER-PALMED GLOVES.

g. Inspect M58A3/A4 (HE) Linear Demolition Charge. Inspect M58A3/A4 linear demolition charge per Table 6.2 and 6.3.

h. Inspect M68A2 Inert) Linear Demolition Charge. Inspect M68A2 linear demolition charge per Table 6.4 and 6.5.

i. Inspect MOD 3 Rocket. Inspect MOD 3 rocket motor per Table 6.6.

j. Inspect MOD 4 Rocket. Inspect MOD 4 rocket motor per Table 6.7.

Section III. TROUBLESHOOTING PROCEDURES

4.6 HYDRAULIC ASSEMBLIES TROUBLESHOOTING. Table 4.1 provides procedures for troubleshooting the hydraulic assembly. Troubleshooting helps you identify problems on the equipment and tells you what to do to fix those problems. Perform the tests or inspections and corrective actions in the order listed. Upon receiving launcher for maintenance, verify the results of PMCS. TM 9-2330-247-14&P contains troubleshooting procedures for the M353 trailer, and TM 9-2330-205-14&P contains troubleshooting procedures for the M200A1 trailer.

Table 4.1. Troubleshooting Procedures for the Hydraulic Assembles

MALFUNCTION
TEST OR INSPECTION
CORRECTIVE ACTION

1. LAUNCHER RAIL DOES NOT RAISE OR LOWER

NOTE

- **MAKE SURE THAT BOTH BALL-LOCK PINS ARE IN THE RAISE (SIDE) POSITION OR OUT OF THE SUPPORT RAIL HOLES.**
- **MAKE SURE THAT LAUNCHER RAIL IS AT 00 ELEVATION WHEN CHECKING HYDRAULIC FLUID LEVELS.**
- **MAKE SURE THAT THE PUMP VALVE LEVER IS IN HOLD POSITION WHEN YOU ARE RAISING THE RAIL AND IN THE RELEASE POSITION WHEN YOU ARE LOWERING THE RAIL.**

Step 1. Check hydraulic fluid level in hand pump reservoir. (Dipstick unthreaded.) If there is no dipstick, fluid should be 4 inches from top of hole.

a. If dipstick shows low fluid, fill reservoir and try to raise launcher rail.

b. If reservoir is full or if filling does not help, bleed hydraulic system (para 4.9).

Step 2. Check hydraulic hoses, hydraulic control valve, solenoid valve (MOD 2 and MOD 3), hydraulic cylinder, hand pump, accumulator, and gage for breakage and leaks.

a. Replace or repair damaged or leaking components (para 4.17).

Table 4.1. Troubleshooting Procedures for the Hydraulic Assemblies (Cont)

MALFUNCTION
TEST OR INSPECTION
CORRECTIVE ACTION

Step 3. Check launcher rail (pivots) and launcher rail supports for dents, corrosion, or obstructions.

a. Replace launcher rail or launcher rail supports if they are damaged or obstructed.

b. Notify direct support maintenance if launcher rail or launcher rail supports are corroded or damaged.

Step 4. If launcher rail will not lower, check to ensure cam weldment is below pin on launcher support. It may snap above pin if launcher rail is raised too high.

Correct by disassembling rocket release mechanism (see para 4.15). Also check for bent support arms or fault detents.

Step 5. Check hand pump by setting pump valve lever to HOLD position and hydraulic control valve lever to PRESSURIZE ACCUMULATOR position and operate pump handle, ensure gage is serviceable.

a. Replace hand pump if gage reading does not change and gage is serviceable (para 4.20).

Step 6. (MOD 2 and MOD 3) If attempting to raise with vehicle power, check cable connection to solenoid valve receptacle. Ensure that power is available to solenoid valve.

a. If rail still does not raise, try to raise it manually with hand pump and 4-way valve.

2. LAUNCHER RAIL RAISES OR LOWERS HALTINGLY

Step 1. Check hydraulic fluid level in hand pump reservoir. (Dipstick unthreaded.) If there is no dipstick, fluid should be 4 inches from top of fill hole.

a. If dipstick shows low fluid, fill reservoir and try to raise launcher rail.

b. If reservoir is full or if filling does not help, bleed hydraulic system IAW para 4.9 to release trapped air.

Table 4.1. Troubleshooting Procedures for the Hydraulic Assemblies (Cont)

MALFUNCTION
TEST OR INSPECTION
CORRECTIVE ACTION

Step 2. Check hydraulic cylinder for damage and leaks.

a. If hydraulic cylinder is damaged or leaking (class II leak), repair.

Step 3. Check hydraulic control valve for damage and leaks.

a. If hydraulic control valve is damaged or leaking (class II leak), repair.

Step 4. Check hydraulic hoses, lines, and fittings for damage and leaks.

a. If hoses, lines, or fittings are damaged or leaking, replace as required (para 4.22).

Step 5. If using vehicle power, attempt manual method of raising rail (4-way valve).

a. If rail still raises haltingly, proceed to step 6.

b. If rail raises normally by manual method, perform electrical check (para 2.6.10 for MOD 0 and MOD 1, para 2.6.15 for MOD 2 and MOD 3).

c. If electrical system is functioning, then test solenoid valve by applying proper voltage. If solenoid does not function during testing, replace the solenoid valve.

Step 6. Check hydraulic accumulator for leaks. If gage indicates less than 2250 psi and hydraulic control valve lever is in PRESSURIZE ACCUMULATOR position, set pump valve lever to HOLD position and operate pump handle back and forth once or twice.

a. If gage still reads less than 2250 psi (see Table 2.2), have direct support maintenance repressurize accumulator.

b. If gage still reads less than 2250 psi (see Table 2.2) and direct support maintenance has repressurized accumulator, replace accumulator (para 4.16).

Step 7. Disconnect and check fluid dampener (1) to ensure that no foreign material is blocking its hole.

a. If fluid dampener (1) (see Figure 4.5) is blocked, remove blockage and replace (para 4.22).

Legend:

(1) Fluid Dampener

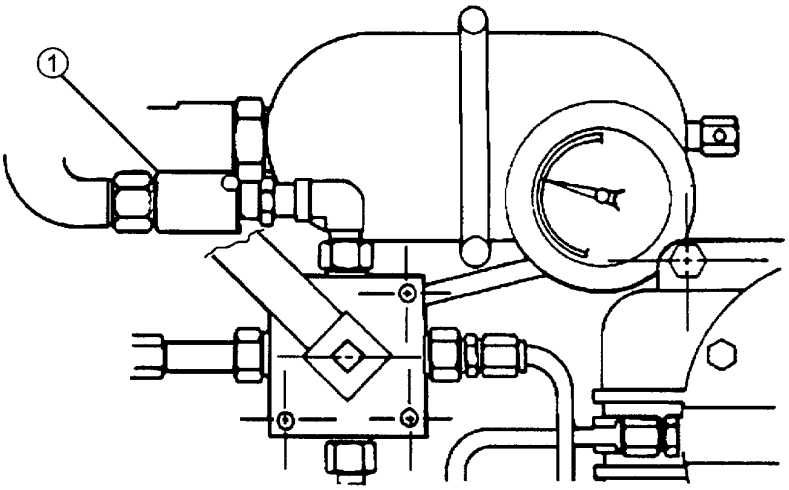

Figure 4.5. Top View of Hydraulic Components With Cover Removed

4.7 ELECTRICAL ASSEMBLIES TROUBLESHOOTING. The following continuity checks will help you fault isolate problems with the components of the electrical system of the MICLIC. If you identify problems during these procedures, turn in the faulty electrical component to direct support maintenance for repair. Figures 4.6 and 4.7 show the MOD 0/1 and MOD 2/3 electrical system plug and pin connections, respectively.

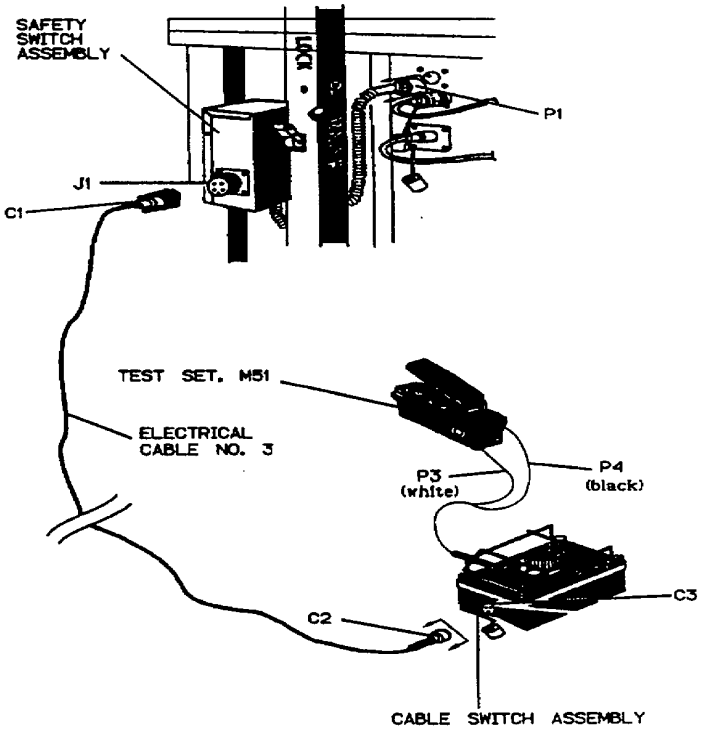

Figure 4.6. MOD 0/1 Electrical System

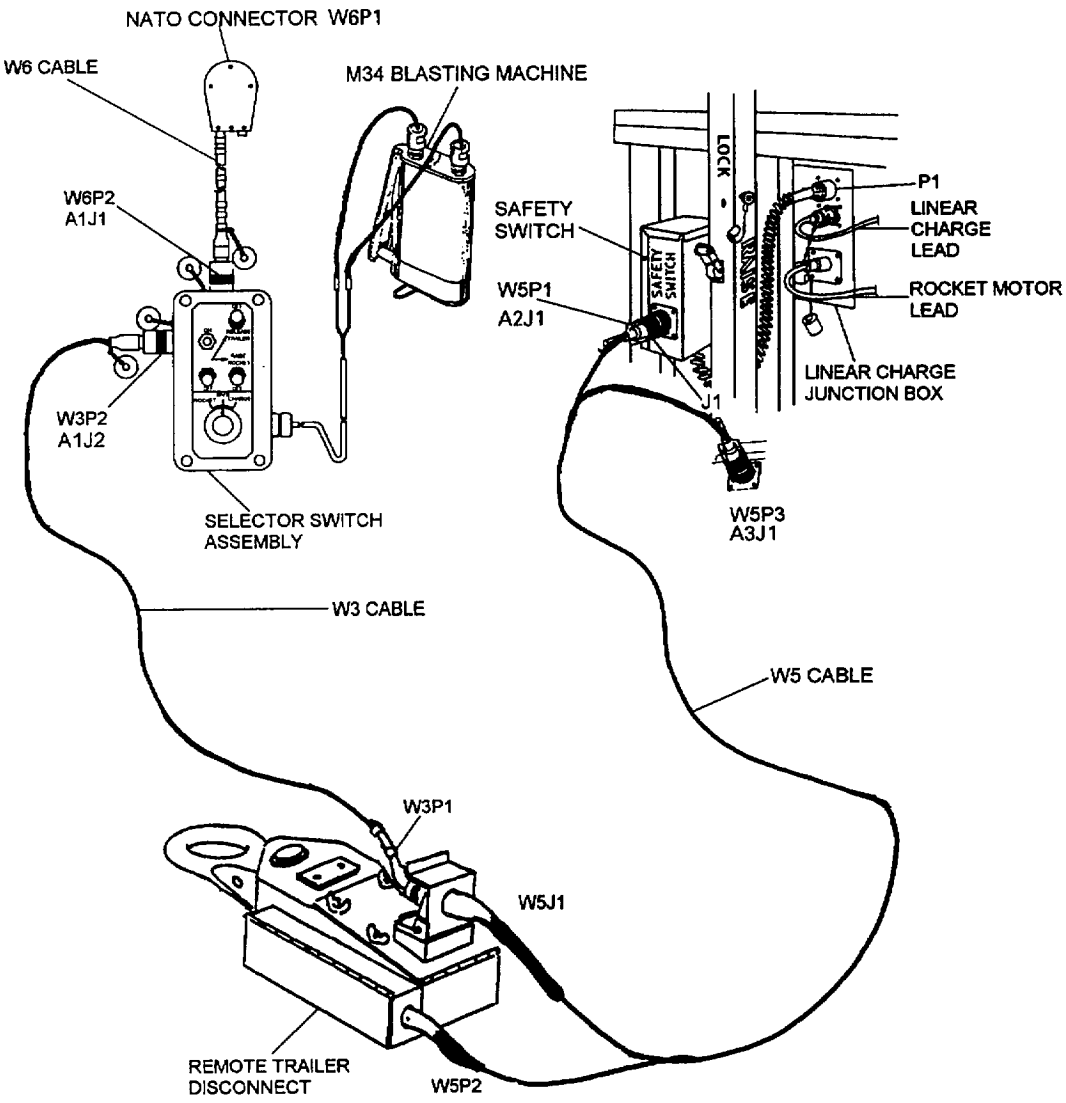

Figure 4.7. MOD 2/3 Electrical System

a. Initial Setup

- **Tools**
  - Digital Multimeter (NSN 6625-01-131-8586 (or equivalent))
- **Personnel Required**
  - Construction Equipment Repairer (MOS 62B)

b. Continuity Check of the Safety Switch Assembly

(1) Set multimeter to read resistance values (ohms). Set multimeter to provide an audio alert when continuity or a closed circuit is read.

(2) With launcher rail in down position, disconnect safety switch P1 electrical lead from safety switch J1 receptacle.

(3) Check continuity of safety switch internal shunt. Place multimeter leads on pin A and B of P1 electrical lead (see Figure 4.8). Multimeter should indicate continuity.

(4) With launcher rail in down position, check continuity of safety switch. Place one multimeter lead on pin A of J1 receptacle connector and the other lead on sockets A through D of P1 plug connector. Table 4.2 identifies the correct indications.

(5) Repeat this procedure with pins B, C, and D of J1 receptacle connector.

SAFETY SWITCH CONNECTION		KEY
J1	P1	○ Female socket
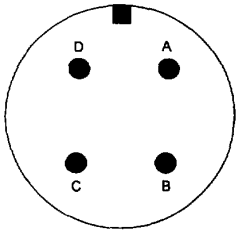	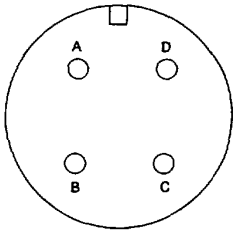	● Male pin Female keyway ▮ Male keyway

Figure 4.8. Receptacle Connector and P1 Plug Connector

Table 4.2. Safety Switch Assembly Wiring Continuity Check with Launcher Rail in DOWN Position

P1 PLUG CONNECTOR PINS					
	CONTINUITY?	A	B	C	D
		YES[1]			
J1	A	NO	NO	NO	NO
RECEPTACLE	B	NO	NO	NO	NO
CONNECTOR	C	NO	NO	YES[2]	NO
PINS	D	NO	NO	NO	NO

[1]Internal shunt wiring.
[2]Linear demolition charge wiring.

NOTE

THE SAFETY SWITCH INTERNAL SHUNT PREVENTS INITIATION OF THE ROCKET.

(6) Raise launcher rail to firing position.

(7) Check continuity of safety switch assembly, see Figure 4.9. Place one lead of multimeter on pin A of J1 receptacle connector and the other lead on sockets A through D of P1 plug connector. Table 4.3 identifies the correct indications.

(8) Repeat this procedure with pins B, C and D of J1 receptacle.

Table 4.3. Safety Switch Assembly Wiring Continuity Check with Launcher Rail Raised

P1 PLUG CONNECTOR PINS					
	CONTINUITY?	A	B	C	D
J1	A	YES[1]	NO	NO	NO
RECEPTACLE	B	NO	YES[2]	NO	NO
CONNECTOR	C	NO	NO	YES[3]	NO
PINS	D	NO	NO	NO	NO

[1]Rocket through safety switch
[2]Common ground wiring through safety switch.
[3]Linear demolition charge wiring.

(9) If tests for continuity are other than those indicated in tables 4.2 and 4.3, repair J1 receptacle connector IAW para. 5.7.3a(9) and P1 plug connector IAW para. 5.7.3a(1).

TO
SELECTOR SWITCH
ASSEMBLY,
DWG. NO.
82A5052A0800 (P2)

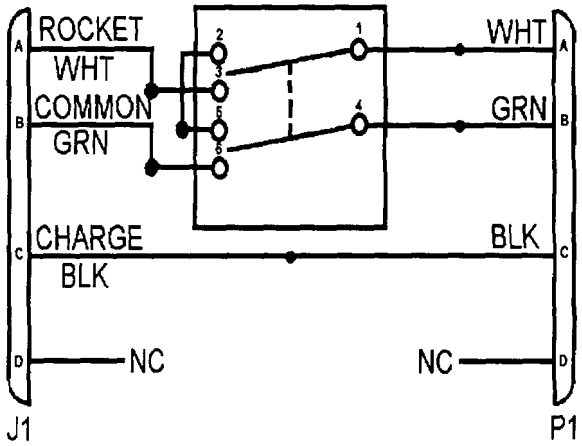

TO CONTAINER
JUNCTION
BOX ASSEMBLY,
DWG. NO.
5854643 (P)

Figure 4.9. Safety Switch Assembly Wiring Diagram in the Launcher Up Position

c. Continuity Check of the Selector Switch Box. MOD 0/1 (see Figures 4.10 and 4.11).

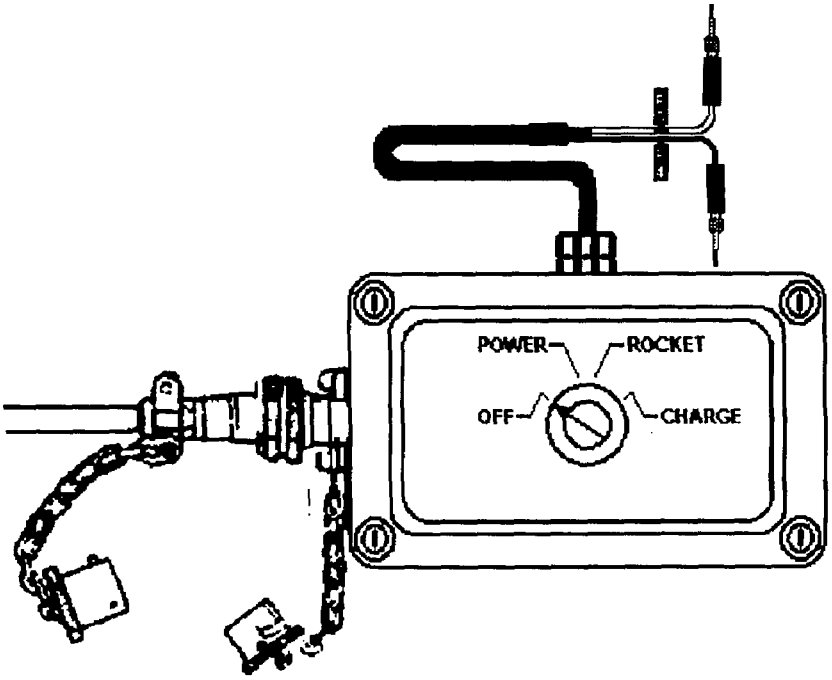

Figure 4.10. Selector Switch Box

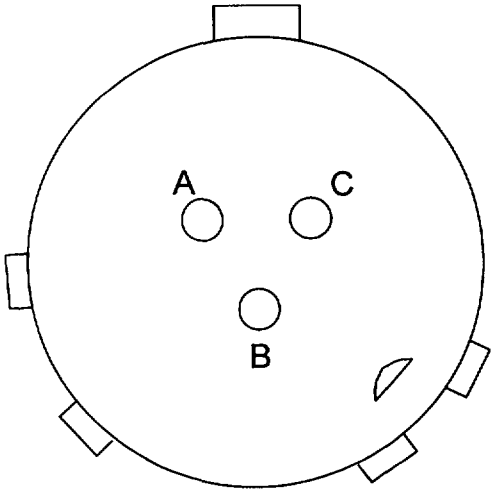

Figure 4.11. C3 Connector

(1) Set digital multimeter to read ohms and to provide audio alert when continuity or a closed circuit is read.

(2) Set cable switch box knob to POWER (see Figure 4.10). Check continuity of P3/P4 leads. Place one multimeter lead on P3 and the other lead on P4. Repeat procedure with selector switch box knob set to ROCKET and CHARGE. Table 4-4 identifies the correct indications.

(3) Check continuity of C3 (see Figure 4.11) connector on the selector switch box. Set selector switch box knob to OFF. Place one multimeter lead on socket B of C3, place other lead first on P3 then on P4. Set selector switch box to POWER. Place one multimeter lead on socket B of C3 and other lead first on P3 then on P4. Table 4-4 identifies the correct indications.

(4) Set selector switch box knob to ROCKET. Place one multimeter lead on socket A of C3 and other lead first on P3 then on P4. Table 4-4 identifies the correct indications.

(5) Set selector switch box knob to CHARGE. Place one multimeter lead on socket C of C3 and the other lead first on P3 then on P4. Table 4-4 identifies the correct indications.

Table 4.4. Selector Switch Box Continuity Check

Point to Point	Off	Power	Rocket	Charge
P3-P4	NO	YES	NO	NO
P3-A	NO	NO	NO	NO
P3-B	YES	YES	YES	YES
P3-C	NO	NO	NO	NO
P4-A	NO	NO	YES	NO
P4-B	NO	YES	NO	NO
P4-C	NO	NO	NO	YES

(6) If any "NO" shows continuity, then the switch is bad.

(7) If any "YES" does not show continuity, then check all wires end to end.

(8) If no defective wires are found, then notify support maintenance to replace the switch.

(9) If there is physical damage to the selector switch box or its components, notify support maintenance.

d. Continuity Check of the Selector Switch Assembly. MOD 2/3 (see Figures 4.12, 4.13 and 4.14).

Legend:

(1) A1J2 Receptacle
(2) A1J1 Plug

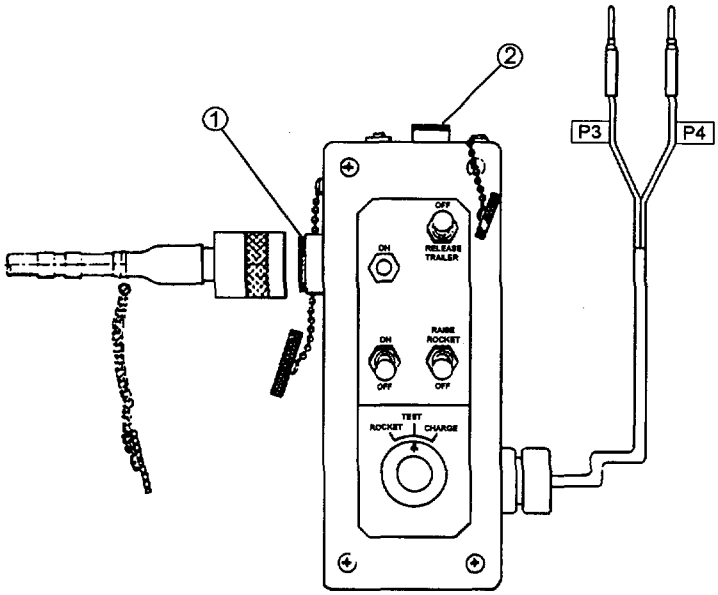

Figure 4.12. Selector Switch Assembly

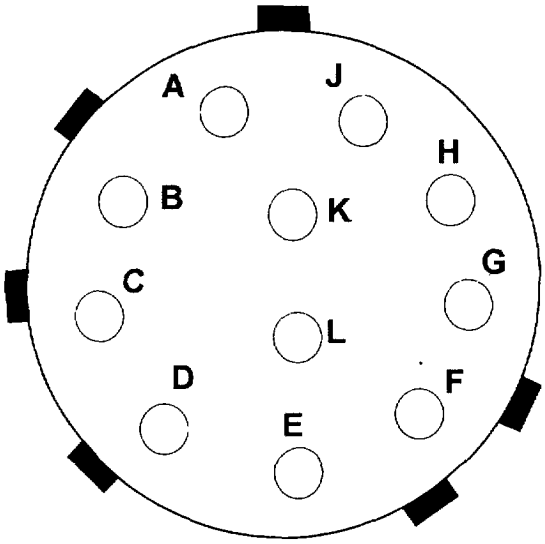

Figure 4.13. A1J2 Socket

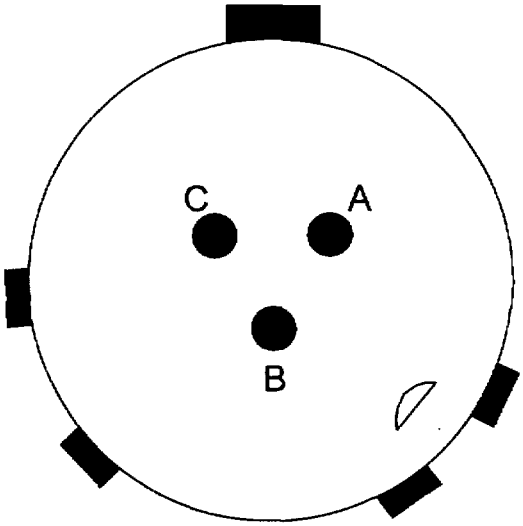

Figure 4.14. A1J1 Plug

(1) Set digital multimeter to read ohms and to provide an audio alert when continuity or a closed circuit is read.

(2) Check continuity of P3/P4 leads (see Figure 4.12). Set selector switch to TEST. Place one multimeter lead on P3 and the other lead on P4. Repeat procedure with selector switch on ROCKET and CHARGE. Table 4-5 identifies the correct indications.

Table 4.5. P3/P4 Leads Continuity Check

	Continuity?	**P3/P4**
Selector	TEST/SAFE	Y
Switch	ROCKET	N
Assembly	CHARGE	N

(3) Check continuity of A1J2 receptacle (see Figure 4.13). Table 4.6 identifies the correct indications.

(a) Set selector switch to TEST. Place one multimeter lead on B socket of A1J2 and other multimeter lead on P3 then P4.

(b) Move selector switch to ROCKET. Place one multimeter lead on A socket of A1J2. Place other multimeter lead on P3 then P4.

(c) Move selector switch to CHARGE. Place one multimeter lead on C socket of A1J2. Place other multimeter lead on P3 then P4.

Table 4.6. A1J2 Receptacle Continuity Check

Continuity?			
A1J2	Selector Switch	P3	P4
B	TEST	Y	Y
C	CHARGE	N	Y
A	ROCKET	N	Y
D-L	N/A	-	-

(4) At the same time toggle Power ON/OFF switch to ON and RAISE ROCKET switch to on. Place one multimeter lead on A plug of A1J1 (see Figure 4.14) and the other lead on E socket of A1J2. Multimeter should indicate continuity. Switch multimeter lead from A plug of A1J1 to the B plug and keep the other lead on E socket of A1J2. Multimeter should indicate continuity.

Table 4.7. A1J1 Receptacle Continuity Check

Continuity?		A1J1	
Power ON/OFF and	A1J2	A	B
RAISE ROCKET on	E	Y	Y

(5) At the same time toggle Power ON/OFF switch to ON and RELEASE TRAILER switch to on. Place one multimeter lead on A plug of A1J1 and the other lead on G socket of A1J2. Multimeter should indicate continuity. Switch multimeter lead from A plug of A1J1 to the B plug and keep the other lead on G socket of A1J2. Multimeter should indicate continuity.

Table 4.8. A1J1 Receptacle Continuity Check

Continuity?		A1J1	
Power ON/OFF and	A1J2	A	B
RELEASE TRAILER on	G	Y	Y

e. Continuity Check of 75 Foot No. 3 Electrical Cable. MOD 0/1 (see Figures 4.15 and 4.16).

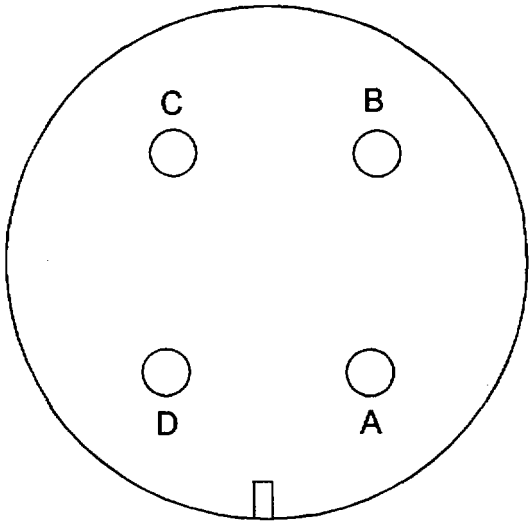

Figure 4.15. Connector C1

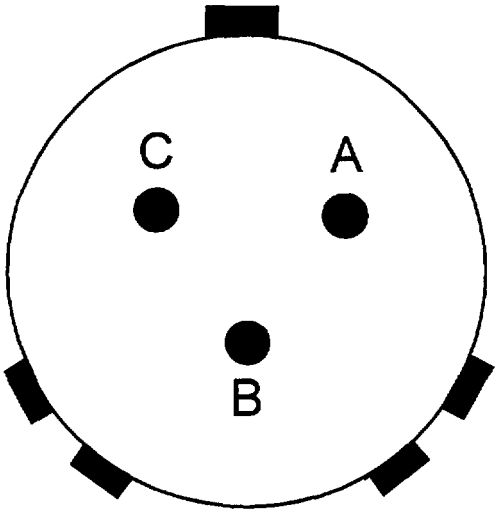

Figure 4.16. Connector C2

(1) Set multimeter to read ohms and to provide an audio alert when continuity or a closed circuit is read.

(2) Check continuity of No. 3 electrical cable. Place one multimeter lead on socket A of connector C1 and the other lead on pin A of connector C2. Repeat with multimeter lead on pins B and C of connector C2. Table 4-7 identifies the correct indications.

(3) Next place one multimeter lead on socket B of connector C1 and the other lead on pins A, B and C of connector C2. Repeat this procedure with sockets C and D of connector C1. Table 4-7 identifies the correct indications.

Table 4.9. Electrical Cable No 3 Continuity Check

Continuity?		C1 Connector			
		A	B	C	D
C2 Connector	A	Y	N	N	N
	B	N	Y	N	N
	C	N	N	Y	N

f. Continuity Check of the W6 Cable Assembly. MOD 2/3 (see Figures 4.17 and 4.18).

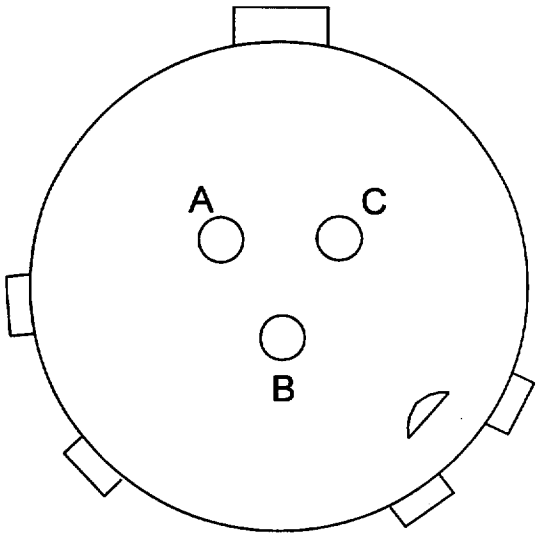

Figure 4.17. W6P2 Socket

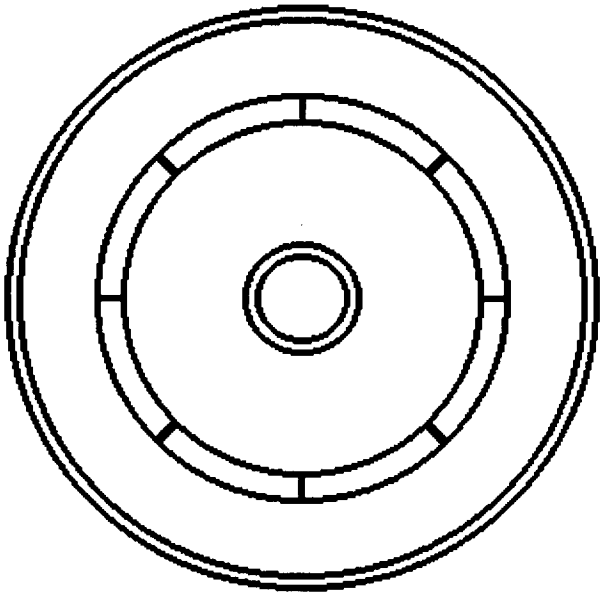

Figure 4.18. W6P1 Plug

(1) Set digital multimeter to read ohms and to provide audio alert when continuity or a closed circuit is read.

(2) Check continuity of W6 cable. Place one multimeter lead on socket A of W6P2 and the other lead on center post of W6P1 and then on shield of W6P1. Repeat with multimeter lead on socket B of W6P2. Table 4-8 identifies the correct indications.

Table 4.10. Cable Assembly W6 Continuity Check

		W6P1	
	Continuity?	Center Post	Shield
W6P2	A	Y	N
	B	N	Y
	C	N	N

g. Continuity Check of the Cable Assembly, W5. MOD 2/3 (See Figures 4.19, 4.20 and 4.21)

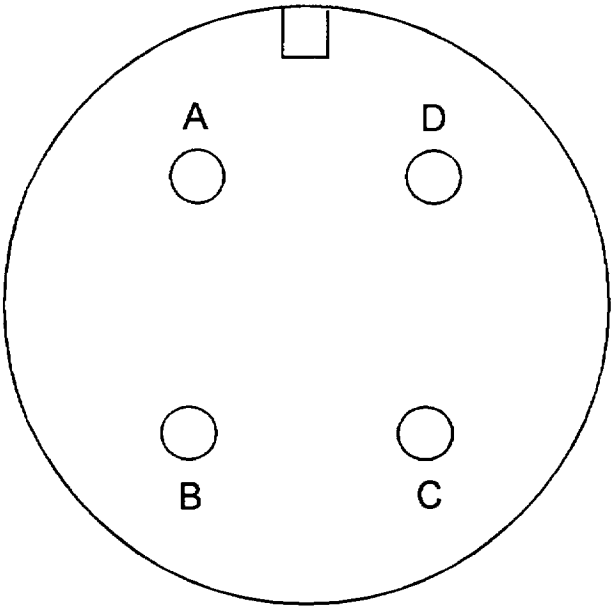

Figure 4.19. W5P1 Socket

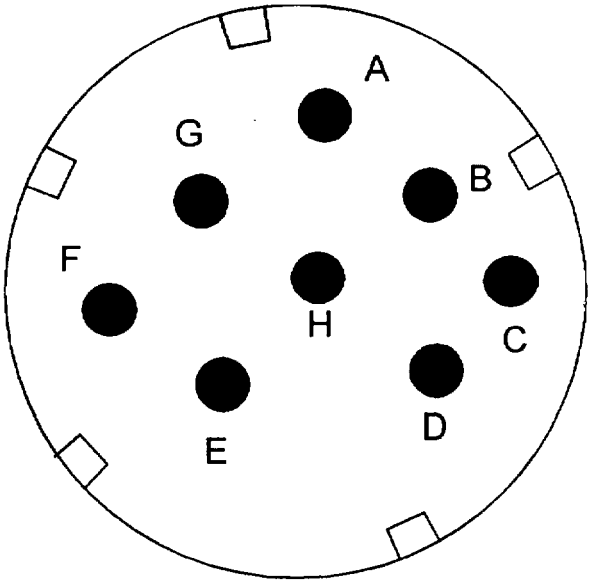

Figure 4.20. W5J1 Plug

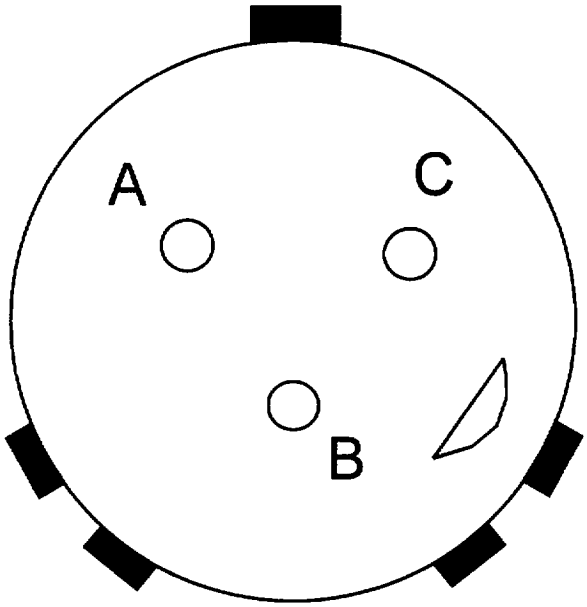

Figure 4.21. W5P2 and W5P3 Sockets

(1) Set digital multimeter to read ohms and to provide an audio alert when continuity or a closed circuit is read.

(2) Check continuity of W5 cable. Place one multimeter lead on pin A of W5J1 and the other lead on sockets A through D of W5P1. Repeat procedure with pins B, C, and D of W5J1.

(3) Place one multimeter lead on pin E of W5J1 and the other lead on socket A, B, and C of W5P3. Repeat procedure with pin F of W5J1.

(4) Place one multimeter lead on pin G of W5J1 and other lead on sockets A-C of W5P2. Repeat procedure with pin H of W5J1. Table 4-9 identifies the correct indications.

Table 4.11. Cable Assembly W5 Continuity Check

Continuity?		W5J1			
		A	B	C	D
W5P1	A	Y	N	N	N
	B	N	Y	N	N
	C	N	N	Y	N
	D	N	N	N	N

Continuity?		W5J1	
		E	F
W5P3	A	Y	N
	B	N	Y
	C	N	N

Continuity?		W5J1	
		G	H
W5P2	A	Y	N
	B	N	Y
	C	N	N

h. Continuity Check of Cable Assembly, W3. MOD 2/3 (see Figures 4.22 and 4.23)

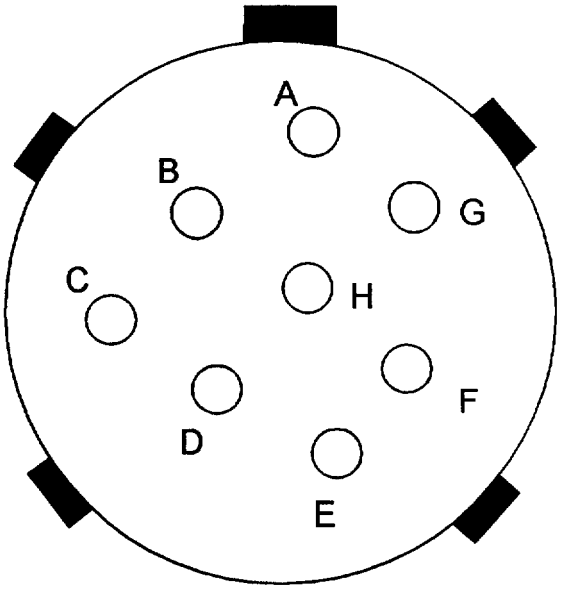

Figure 4.22. W3P1 Socket

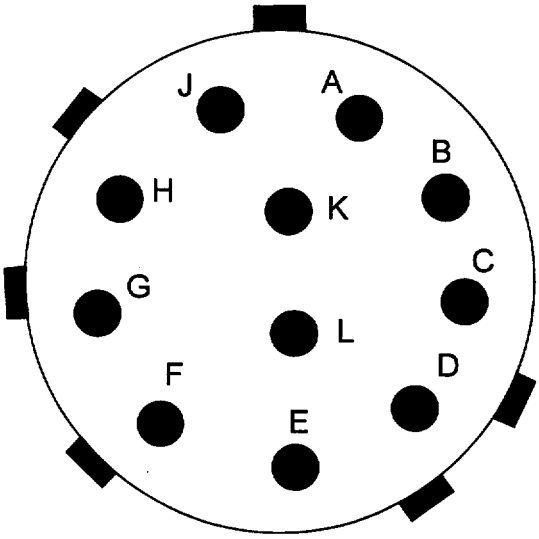

Figure 4.23. W3P2 Socket

(1) Set digital multimeter set to read ohms and to provide an audio alert when continuity or a closed circuit is read.

(2) Check continuity of W3 cable. Place one multimeter lead on socket A of W3P1 and other lead on pins A-H of W3P2. Repeat procedure with sockets B-H of W3P1. Table 4-10 identifies the correct indications.

Table 4.12. Cable Assembly W3 Continuity Check

		W3P1							
	Continuity?	A	B	C	D	E	F	G	H
W3P2	A	Y	N	N	N	N	N	N	N
	B	N	Y	N	N	N	N	N	N
	C	N	N	Y	N	N	N	N	N
	D	N	N	N	N	N	N	N	N
	E	N	N	N	N	Y	N	N	N
	F	N	N	N	N	N	Y	N	N
	G	N	N	N	N	N	N	Y	N
	H	N	N	N	N	N	N	N	Y
	J	NA	NA	NA	NA	NA	NA	NA	NA
	K	NA	NA	NA	NA	NA	NA	NA	NA
	L	NA	NA	NA	NA	NA	NA	NA	NA

i. M34 Blasting Machine

(1) Set digital multimeter to read volts DC and to provide audio alert when continuity or a closed circuit is read.

(2) Check continuity of M34 Blasting Machine. Operate M34 Blasting Machine to make sure indicator lamp lights up when handle is squeezed repeatedly.

(3) If indicator lamp does not light up, attach multimeter across the terminals. Operate M34 Blasting Machine. Read Blasting Machine voltage output. M34 Blasting Machine is operating if voltage output measures more than 222 volts.

(4) If multimeter reads less than 222 volts, do not use M34 Blasting Machine. Obtain new Blasting Machine.

j. M51 Blasting Cap Test Set

(1) Check continuity of M51 Blasting Cap Test Set. Operate M51 Blasting Cap Test Set. The M51 should not light when squeezed.

(2) If M51 lights up when operated, do not use it. Obtain new M51 Blasting Cap Test Set.

(3) If M51 does not light up, attach a small piece of shorting wire between the two contact screw type terminals. Operating the M51 Blasting Cap Test Set should now initiate the test lamp and indicate a good M51 Blasting Cap Test Set.

Section IV. MAINTENANCE PROCEDURES

4.8 GENERAL. This section contains maintenance instructions authorized by the MAC in Appendix B to support MICLIC at the Unit Maintenance level. For specific maintenance instructions on the M353 3-1/2 ton trailer, refer to TM 9-2330-247-14&P; M200A1 refer to TM 9-2330-205-14&P. In maintenance tasks, resources required are not listed unless they apply to the procedure. Personnel are listed only if the task requires more than one. If personnel are not listed, it means that one person is able to do the task.

WARNING

SOME PERSONS ARE SENSITIVE TO HYDRAULIC FLUID AND SKIN IRRITATION RESULTS FROM CONTACT. WASH CONTACTED OR IRRITATED AREAS WITH SOAP AND WATER IMMEDIATELY. SUCH PERSONS SHOULD USE PLASTIC GLOVES AND LABORATORY APRONS LISTED IN MATERIALS/PARTS LISTS WHEN HANDLING HYDRAULIC FLUID.

4.9 BLEED HYDRAULIC SYSTEM

a. This task covers: Bleeding the hydraulic system

b. Initial Setup

· **Tools**

- General Mechanic's Tool Kit (Appendix B, Army NSN 5180-00-177-7033, Marine Corps NSN 5180-00-606-3566)

· **Materials/Parts**

- Cotter pin (P/N 24665-372)
- Hydraulic fluid (NSN 9150-00-935-9807/9808)
- Industrial goggles (NSN 4240-00-052-3776)
- Laboratory apron (NSN 8415-00-634-5023)
- Plastic gloves (NSN 8030-00-763-4841)
- Wiping rags (NSN 7920-00-205-1711)

· **Equipment Conditions**

- Launcher on level ground or secured to trailer.

· **General Safety Concerns**

- Minimize contact of skin with hydraulic fluid or wear gloves.

NOTE

- **BLEED HYDRAULIC SYSTEM AFTER COMPLETING OF REPAIR TO ANY HYDRAULIC COMPONENT.**
- **ENSURE HYDRAULIC HAND PUMP IS FULL AFTER BLEEDING SYSTEM.**
- **DISPOSAL OF HYDRAULIC FLUID MUST BE IAW LOCAL, STATE AND FEDERAL REGULATION.**

c. Bleed Procedures

(1) Place the hydraulic cylinder lower than the pump assembly. Do not disconnect the hose to perform this task.

(2) With the piston pointing toward the ground, manually exercise the cylinder by using the hydraulic pump to extend the cylinder. Do not use the hydraulic accumulator to accomplish this function.

(3) Exercise the cylinder a minimum of 10 strokes, extending and retracting with the piston in the down position. The cylinder has a retracting spring internally and should automatically retract when the pressure is released.

(4) Extend the piston and allow the cylinder to remain in the down position for approximately 20 minutes. This time lapse should allow any air that remains in the hose or hydraulic lines to collect at the higher points.

(5) Release the pressure handle on the hydraulic pump to flush any trapped air remaining in the system back into the pump reservoir.

(6) The system should now be fee of trapped air, but if there are signs or suspicions of air remaining in the system, repeat steps (2) through (5) until the system is thought to be clear of air.

d. Prepare to Raise Rail

(1) Set hydraulic control valve lever (1)(see Figure 4.24) to MANUAL RAISE/LOWER position.

(2) Set pump valve lever (2) to HOLD position.

(3) Remove ball-lock safety pins (3) from LOCK (front) position and insert into RAISE (side) position.

(4) Engage detents (4) by pulling down on levers.

(5) Operate pump handle (5) until launcher rail starts to rise.

(6) Set hydraulic control valve lever (1) to PRESSURIZE ACCUMULATOR position.

(7) Operate pump handle (5) to 3,200-3,500 psi (green area) on the gage (6).

(8) Set hydraulic control valve lever (1) to REMOTE RAISE position.

(9) Launcher rail may not fully raise the first time. Follow steps d.(1) thru d.(8) until launcher rail raises completely.

Legend:

(1) Hydraulic Control Valve Lever
(2) Pump Valve Lever
(3) Ball-Lock Pins
(4) Detents
(5) Pump Handle
(6) Pressure Gage
(7) Rail Supports

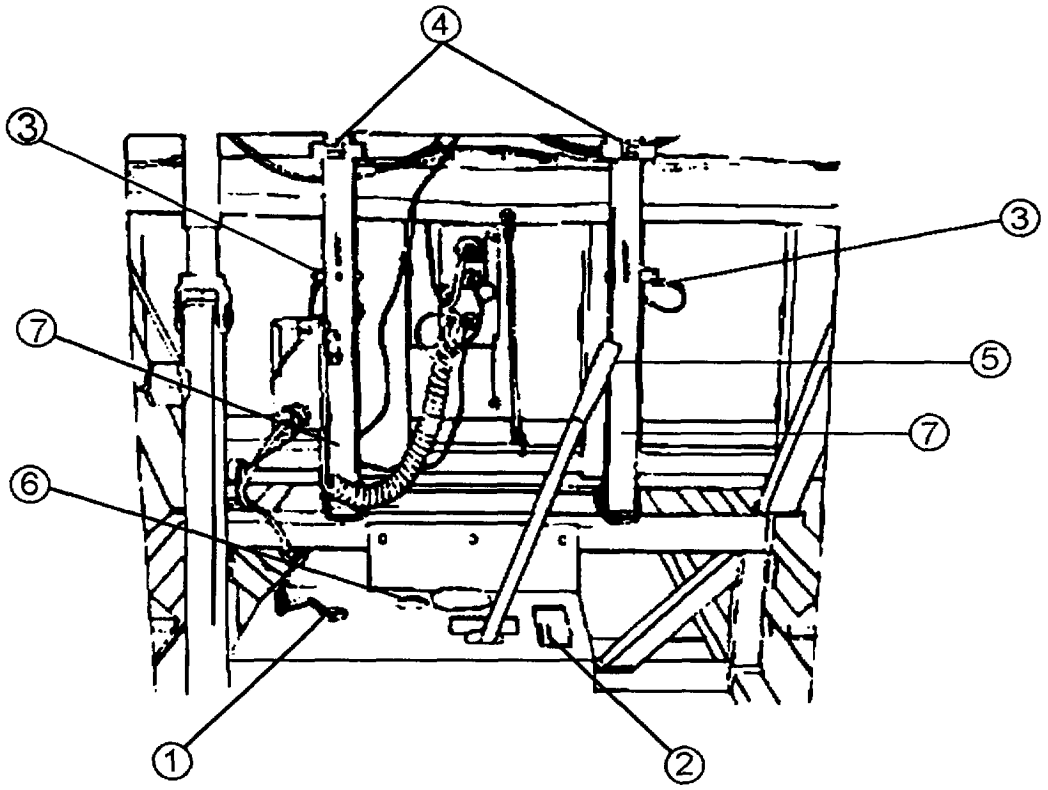

Figure 4.24. Prepare to Raise or Lower Rail

e. Prepare to Lower Rail

(1) Set hydraulic control valve lever (1) to MANUAL RAISE/LOWER position.

NOTE

IF LAUNCHER RAIL DOES NOT FULLY RAISE OR LOWER SMOOTHLY AFTER FOUR ATTEMPTS TO OPERATE, THEN TURN IN THROUGH MAINTENANCE CHANNELS.

(2) Release detents (4) by pushing up on levers.

(3) Move pump valve lever (2) slightly toward RELEASE position and slowly lower launcher rail to O".

(4) If rail fails to lower, check detents (4) or bent launcher rail supports (7).

(5) Set pump valve lever (2) to HOLD.

(6) Check hydraulic fluid with dipstick, or ensure fluid level is approximately 4 inches from top of fill hole. Add hydraulic fluid as necessary.

f. Raise and Lower MOD 2 and MOD 3 Rail

(1) For MOD 2 and MOD 3 launchers ONLY, perform the following:

(a) Join electrical connections and utilize vehicle power and the selector switch assembly to raise the rail IAW para 2.7.14.

(b) If launcher rail does not fully raise, repeat steps e (1) through e (6) until rail raises completely. If rail does not fully raise smoothly after four times, turn in through maintenance channels.

4.10 REPLACE LAUNCHER RAIL.

a. This task covers: Removal and Installation of the Launcher Rail

b. Initial Setup

· **Tools**

- General Mechanic's Tool Kit (Appendix B, Army NSN 5180-00-177-7033, Marine Corps NSN 5180-00-606-3566)

· **Materials/Parts**

- Clevis pins (if needed)(P/N MS20392-9C89)
- Cotter pins (P/N MS 24665-372)

- **Equipment Conditions**
  - Launcher on flat ground or secured to trailer
- **General Safety Instructions**
  - Launcher rail is heavy. Provide adequate means of support when removing clevis pins.
- **Personnel - three**

WARNING

SUPPORT FORWARD-END OF LAUNCHER RAIL WHILE REMOVING CLEVIS MOUNTING TO PREVENT RAIL FROM FALLING AND INJURING PERSONNEL.

4.10.1 REMOVE RAIL FROM LAUNCHER

a. Removal of Launcher Rail

(1) Set hydraulic control valve lever (1)(see Figure 4.25) to MANUAL RAISE/LOWER position.

(2) Ensure ball-lock pins are in LOCK (front) position.

(3) Slowly rotate pump valve lever (2) to RELEASE position removing all pressure from the cylinder.

(4) Remove cotter pin (3) and flatwasher (4) from clevis pin (5) on top of cylinder (6).

(5) Inspect clevis pin (5) and flatwashers (4). Replace as required.

Legend:

(1) Hydraulic Control Valve
(2) Pump Valve Lever
(3) Cotter Pin
(4) Washer
(5) Clevis Pin
(6) Cylinder
(7) Cotter Pin, Launcher
(8) Washers
(9) Clevis Pin
(10) Left Rail Support
(11) Right Rail Support
(12) Cotter Pin
(13) Washers
(14) Clevis Pin
(15) Left Rail Weldment
(16) Right Rail Weldment
(17) Rail

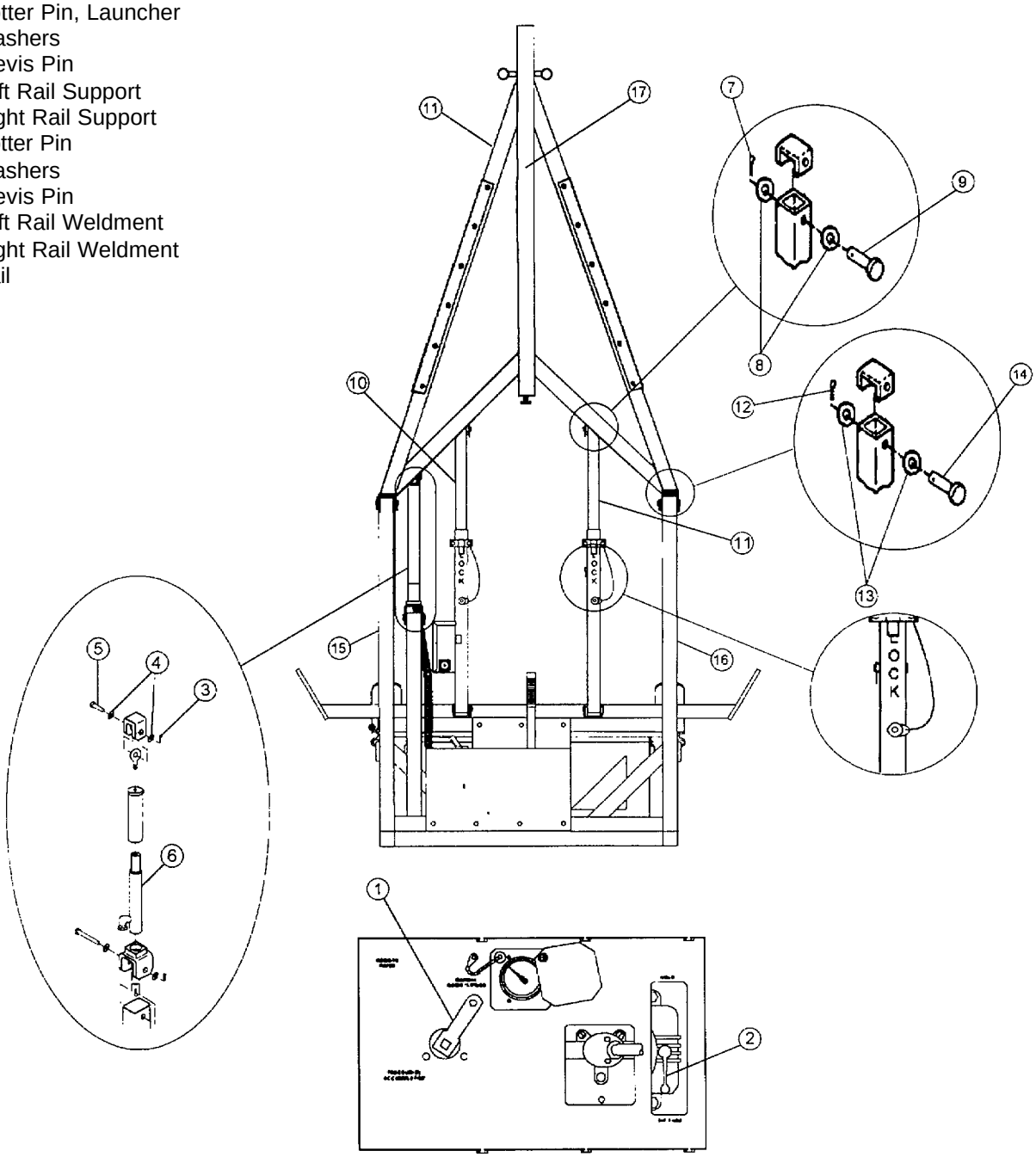

Figure 4.25. Removal and Installation of Launcher Rail

(6) As three persons support launcher rail, remove cotter pin (7)(see 4.25) and flatwasher (8) from each clevis pin (9) of the left-hand and right-hand side of launcher rail supports (10) and (11).

(7) Remove cotter pin (1 2) and flatwasher (13) from each clevis pin (14) at top of left-hand and right-hand launcher weldment (15) and (16).

NOTE

- **LAY LAUNCHER RAIL SUPPORTS DOWN ON LAUNCHER WELDMENT.**
- **ENSURE LAUNCHER RAIL IS SUPPORTED AT THREE LOCATIONS.**

(8) Remove two clevis pins (9) and two flatwashers (8) from launcher rail supports (10) and (11).

(9) Remove two clevis pins (14) and two flatwashers (13) from clevis weldments (15) and (16).

(10) Remove launcher rail (17) from launcher rail supports.

(11) Inspect clevis pins, (9) and (14) and flatwashers, (8) and (13). Replace as needed.

b. Installation of Launcher Rail

(1) Position launcher rail (17) on launcher rail supports (10) and (11).

(2) Using three persons to hold the launcher rail (17) in place, align holes in clevis weldments and launcher weldments (15) and (16).

(3) Position inside flatwashers (13) and insert clevis pins (14) into holes in clevis weldments and launcher weldments (15) and (16).

(4) Align holes of launcher rail supports with launcher rail clevis weldment. Position inside flatwashers (8) and insert clevis pins (9) into holes in top left-hand and right-hand rail supports (10) and (11) and launcher rail (17).

(5) Place flatwasher (13) on each clevis pin (14).

(6) Insert cotter pin (12) in each clevis pin (14).

(7) Place flatwasher (8) on each clevis pin (9).

(8) insert two cotter pins (7) on each clevis pin (9).

(9) Place cylinder (6)(see Figure 4.25) into clevis mounting on rail (17) and align holes.

(10) Position inside flatwasher (4) and insert clevis pin (5) into hole of clevis mounting and cylinder (6).

(11) Install flatwasher (4) and cotter pin (3).

4.11 REPLACE LAUNCHER RAIL SUPPORT

a. This task covers: Removal and Replacement of Launcher Rail Supports

b. Initial Setup

· **Tools**

- General Mechanic's Tool Kit (Army NSN 5180-00-177-7033, Marine Corps NSN 5180-00-606-3566)

· **Materials/Parts**

- Clevis pins (P/N MS20392-9C51)
- Cotter pins (P/N MS24665-372)
- Flatwashers (P/N AN960-1016)
- New launcher rail supports (P/N: Left 82A5052B0330;
  Right 82A5052B0320; Right Center 82A5058B0313;
  Left Center 82A505A0310)

· **Equipment Conditions**

- Detents removed (para 4.14) on launcher rail to be replaced.
- Launcher on flat ground or secure to trailer.
- Rail at O°.
- Safety switch removed (para 5.7 by Direct Support Maintenance) if tubing weldment safety switch is to be replaced.

· **General Safety Instructions**

- Ensure sufficient personnel to hold/lift rail.

WARNING

IF LAUNCHER RAIL HAS NOT BEEN REMOVED, DO NOT ATTEMPT TO REMOVE BOTH SUPPORT ASSEMBLIES AT THE SAME TIME. ENSURE BALL-LOCK PIN (FOR THE SUPPORTS THAT ARE NOT REPLACED) IS IN LOCK POSITION.

c. Removal of Launcher Rail Support

(1) Remove ball-lock pin (1)(see Figure 4.27) from launcher rail support to be replaced.

(2) Remove cotter pins (3) from clevis pins (5) using needle-nose pliers on launcher rail support to be replaced.

(3) Remove flatwashers (4) from clevis pins (5).

WARNING

SUPPORT LAUNCHER RAIL SUPPORTS WHILE REMOVING UPPER CLEVIS PINS TO PREVENT THEM FROM FALLING AND STRIKING PERSONNEL.

(4) Remove clevis pin (5) and flatwasher (4) from inner launcher support (6) or (7) and launcher rail weldment (8).

(5) Remove clevis pin (5) and flatwasher (4) from outer launcher support (9) or (10) and clevis weldment (2).

(6) Lift launcher rail supports (9) and (6) or (10) and (7) from clevis weldment (2).

(7) Inspect clevis pins (5) and flatwasher (4) and replace as needed.

Legend:

(1) Ball-Lock Pin
(2) Clevis Weldment
(3) Cotter Pins
(4) Flatwasher
(5) Clevis Pin
(6) Inner Support, Left
(7) Inner Support, Right
(8) Rail Weldment
(9) Outer Support, Left
(10) Outer Support, Right
(11) Cam Weldment

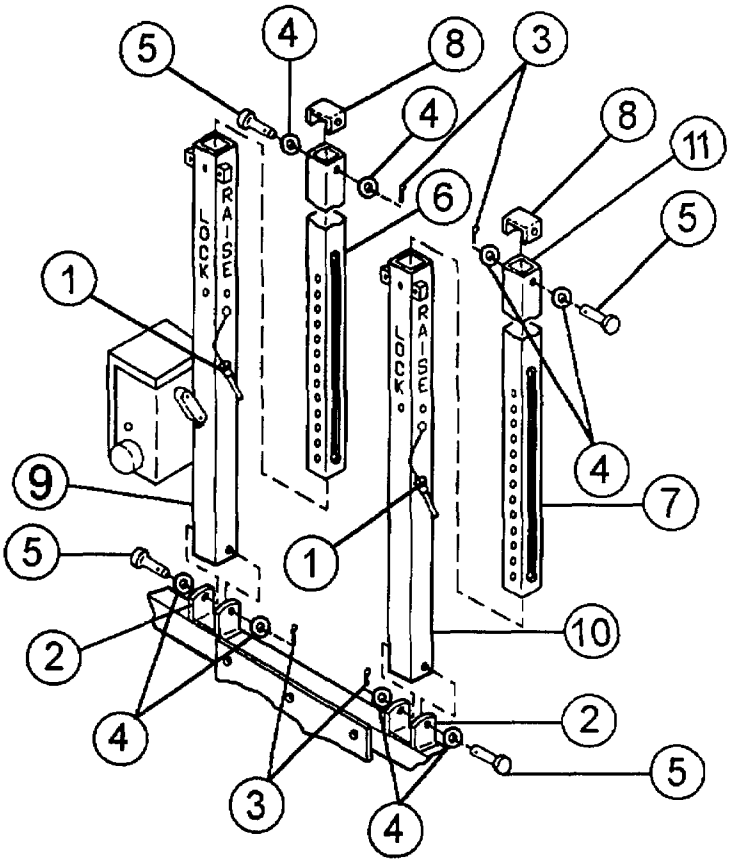

Figure 4.26. Replace Launcher Rail Support

(8) If right rail support is to be further disassembled, remove rail ball lock pin (1) (physically present in all MOD 1 and MOD 3 items) to permit separation.

d. Replacement of Launcher Rail Supports

(1) Ensure launcher rail support (6) or (7) (see Figure 4.26) is inserted into launcher rail support (9) or (10) so that the holes of (6) or (7) are facing the LOCK position side of item (9) or (10).

(2) Ensure launcher rail support (7) has the pin away from side of detent assembly of launcher rail support (10).

(3) Place new launcher rail supports (9) and (6) or (10) and (7) into clevis weldment (2).

(4) Place flatwasher (4) on clevis pin (5) and install into clevis weldment (2) and launcher rail support (9) or (10) holes.

(5) Place flatwasher (4) on clevis pin (5).

NOTE

ENSURE CAM WELDMENT IS IN PROPER POSITION BELOW RESTRAINT PIN ON LAUNCHER RAIL SUPPORT.

(6) Place launcher rail support (6) or (7) into launcher rail weldment (8).

(7) Install clevis pin (5) with flatwasher (4) into launcher rail weldment (8) and launcher rail support (6) or (7) holes.

(8) Install flatwashers (4) and new cotter pins (3).

(9) Install ball-lock pin (1) into launcher rail support.

(10) Replace detents (para 4.14), if they were removed.

(11) Check safety switch operation using subprocedure below for MOD O and MOD 1 launchers only. Proceed to para (12) below for MOD 2 and MOD 3 launchers.

NOTE

ENSURE LAUNCH RAIL IS AT O°.

(a) Position an M68A2 linear demolition charge in proximity of the rear of launcher that is under repair to permit electrical connections.

(b) Obtain cable No. 3 (76 ft), selector switch box and M51 tester from the front storage box.

(c) Rotate switch of selector switch box through its operating positions. Return switch to OFF.

(d) To check M51 tester for proper functioning, refer to paragraph 4.7.j.

(e) Remove safety switch electrical lead from J-1 on safety switch box on launcher and connect to receptacle No. 1 on container.

(f) Connect cable assembly No. 3 (76 ft) to J-1 on safety switch box.

(g) Connect line charge electrical lead to receptacle No. 2 on container.

(h) Obtain rocket motor shunt plug, normally taped to inner rear wall of linear charge container or in fuze box and install shunt plug into receptacle No. 3.

NOTE

WHEN REMOVING OR INSERTING BALL-LOCK PINS, IT MAY BE NECESSARY TO RAISE OR LOWER THE LAUNCHER RAIL SLIGHTLY.

(i) Perform continuity test procedures from Chapter 2, para 2.7.9.

(j) Disconnect all electrical leads . Return all items to normal storage locations.

NOTE

- **IF STEP (12) CANNOT BE PERFORMED LOCALLY OR DOES NOT GIVE CORRECT INDICATIONS. CHECK CONTINUITY OF SAFETY SWITCH. CONTACT DIRECT SUPPORT MAINTENANCE TO REPAIR FAULTY SAFETY SWITCH.**
- **ENSURE LAUNCHER RAIL IS AT 0°.**

(12) Check safety switch operation using procedures below for MOD 2 and MOD 3 launchers only or forward launcher to Direct Support Maintenance for safety switch test and adjustment.

(a) Position an M68A2 linear demolition charge in proximity of rear of launcher under repair to permit electrical connections.

(b) Obtain selector switch assembly, W3 cable, W5 cable, W6 cable and M51 tester from storage box.

(c) Rotate switch of selector switch assembly through its operating positions. Return switch to SAFE.

(d) To check M51 tester for proper functioning, refer to paragraph 4.7.j.

(e) Remove safety switch electrical lead from J-1 and connect to receptacle No. 1 on demolition charge container.

(f) Connect P3 lead of cable assembly W5 (60 foot; 18.5m) to A3J1 connector located on the hydraulic assembly base plate.

(g) Attach P1 lead of cable assembly W5 to J-1 connector on safety switch box.

(h) Connect line charge lead to receptacle No. 2 (middle) on linear demolition charge container.

(i) Obtain rocket motor shunt, normally taped to inner rear wall of linear demolition charge container or in fuze box, and install shunt into receptacle No. 3 (bottom).

(j) Connect P2 lead of cable assembly W5 to the A1J2 connector of the selector switch assembly.

NOTE

WHEN REMOVING OR INSERTING BALL-LOCK PINS, IT MAY BE NECESSARY TO RAISE OR LOWER THE LAUNCHER RAIL SLIGHTLY.

(k) Perform continuity test procedures from Chapter 2 para 2.7.9 and para 2.7.15.

(l) Disconnect all electrical leads and shunts. Return all items to normal storage locations.

(13) If step (12) cannot be performed locally or does not give correct indications. Check continuity of safety switch. Contact support maintenance to repair faulty safety switch.

4.12 REPLACE CABLE SHEATHS

NOTE

THIS PROCEDURE IS THE SAME FOR BOTH LEFT-HAND AND RIGHT-HAND CABLE SHEATHS.

a. <u>This task covers: Remove and Replace Rocket Bridle Cable Sheaths</u>

b. Initial Setup

- **Tools**

  - General Mechanic's Tool Kit (Army NSN 5180-00-177-7033, Marine Corps NSN 5180-00-606-3566)

- **Materials/Parts**

  - Cable sheaths (P/N 82A5052A001)

- **Equipment Conditions**

  - Launcher on flat ground or secured to trailer
  - Launcher rail at O°

c. Removal of Cable Sheaths

(1) Remove six hex-head capscrews (1)(see Figure 4.27) and flatwashers (2) from cable sheath (3) using 3/16-inch hex key.

(2) Remove cable sheath (3) from launcher rail.

(3) Inspect cable sheath exterior surfaces. If slightly bent, straighten by laying on flat surface and tapping in place with a hammer; if badly bent or warped, replace.

d. Replacement of Cable Sheaths

(1) Position cable sheath (3) on launcher rail (4).

(2) Install six hex-head capscrews (1) and flatwashers (2) into cable sheath using a 3/16-inch hex key.

Legend:

(1) Capscrews, 6
(2) Flatwashers, 6
(3) Cable Sheaths, 2
(4) Launcher Rail

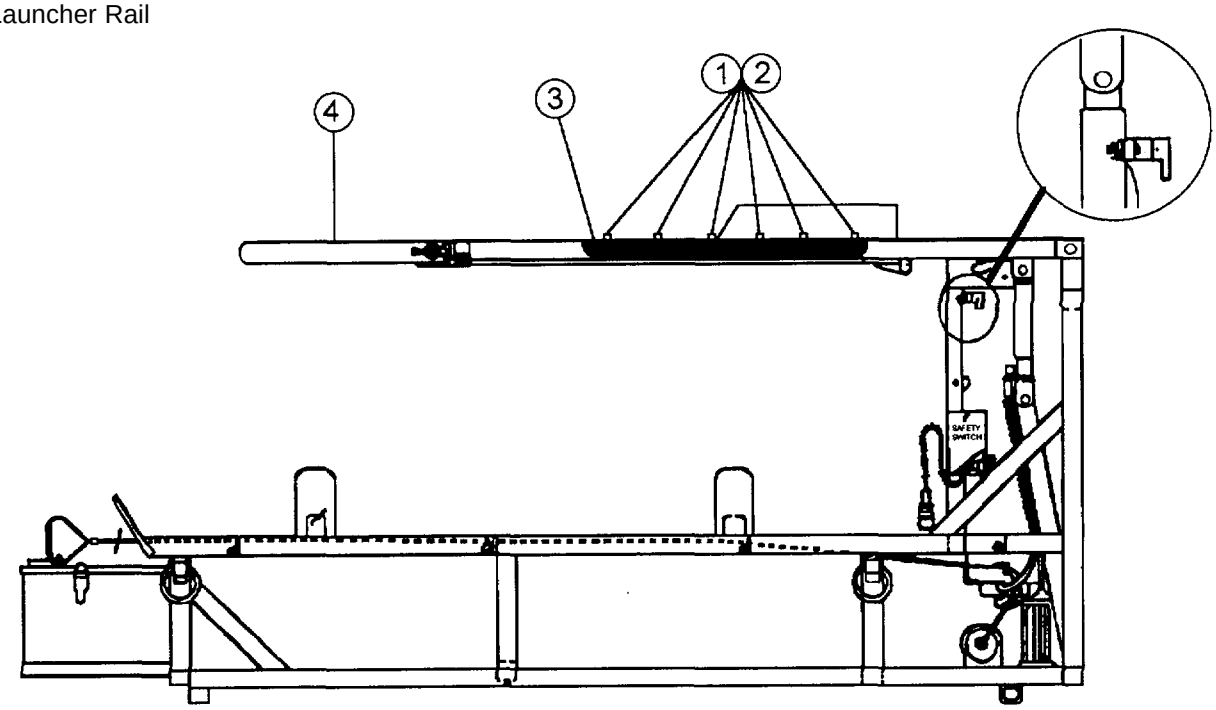

Figure 4.27. Rocket Bridle Cable Sheaths

NOTE

THE GAP BETWEEN THE CABLE SHEATH AND LAUNCHER RAIL SHOULD ALLOW THE ROCKET BRIDLE CABLE TO FIT SNUGLY. IT MAY BE NECESSARY TO BEND CABLE SHEATH IN PLACE FOR DESIRED FIT.

4.13 REPAIR OR REPLACE HAND KNOB ASSEMBLY.

NOTE

THIS PROCEDURE IS TYPICAL FOR BOTH SETS OF HAND KNOB ASSEMBLIES. A COMMON CAUSE OF HAND KNOB ASSEMBLY FAILURE IS BINDING OF CROSSPIECE WITH RAIL. THIS CAN BE CORRECTED BY THE FOLLOWING REMOVAL AND REPLACEMENT PROCEDURES.

a. <u>This task covers: Remove and Replace Hand Knob Assembly</u>

b. Initial Setup

· **Tools**

- General Mechanic's Tool Kit (Army NSN 5180-00-177-7033, Marine Corps NSN 5180-00-606-3566)
- Retaining ring pliers (NSN 5120-00-089-0874)

· **Materials/Parts**

- Retaining ring (P/N MS16624-1068)
- Torsion helical spring (P/N 82A5052A0003)

· **Equipment Conditions**

- Launcher on flat ground or secured to trailer
- Launcher rail at O°

c. Removal of Hand Knob Assembly

(1) Ensure that hex nuts (1)(see Figure 4-28) are not touching crosspiece (2). If they are, screw in bolt (3) a few turns using 9/16-inch wrench.

(2) Loosen hex nut (1) forward of left hand knob (4)(spring side) using a 9/16-inch combination box/open-end wrench.

(3) Unscrew hand knob (4) and hex nut (1) from hex bolt (3). Unscrew hex bolt (3) from crosspiece (2) using a 9/16-inch combination box/open-end wrench.

(4) Using a 7/16-inch socket wrench, remove the hex-head capscrew (5) and flatwasher (6). Remove and retain the spring (7).

(5) Remove retaining ring (8) from groove in crosspiece (2) with retaining ring pliers.

(6) Slide crosspiece (2) to the right and remove from launcher rail (9).

(7) Loosen hex nut (1) below right hand knob (4) using a 9/16-inch wrench.

(8) Unscrew hand knob (4) and hex nut (1) from hex bolt (3).

(9) Unscrew hex bolt (3) from crosspiece (2) using 9/16-inch combination box/open-end wrench.

(10) Inspect and replace damaged or defective parts as needed.

(11) Clean all undamaged parts. Crosspiece should be cleaned with emery cloth and then lubricated with light machine oil before replacement.

Legend:

(1) Hex Nut
(2) Crosspiece
(3) Hex Bolt
(4) Hand Knob
(5) Cap Screw
(6) Flatwasher
(7) Spring, Helical
(8) Retaining Ring
(9) Launcher Rail
(10) Helical Spring Hook
(11) Helical Spring Straight End

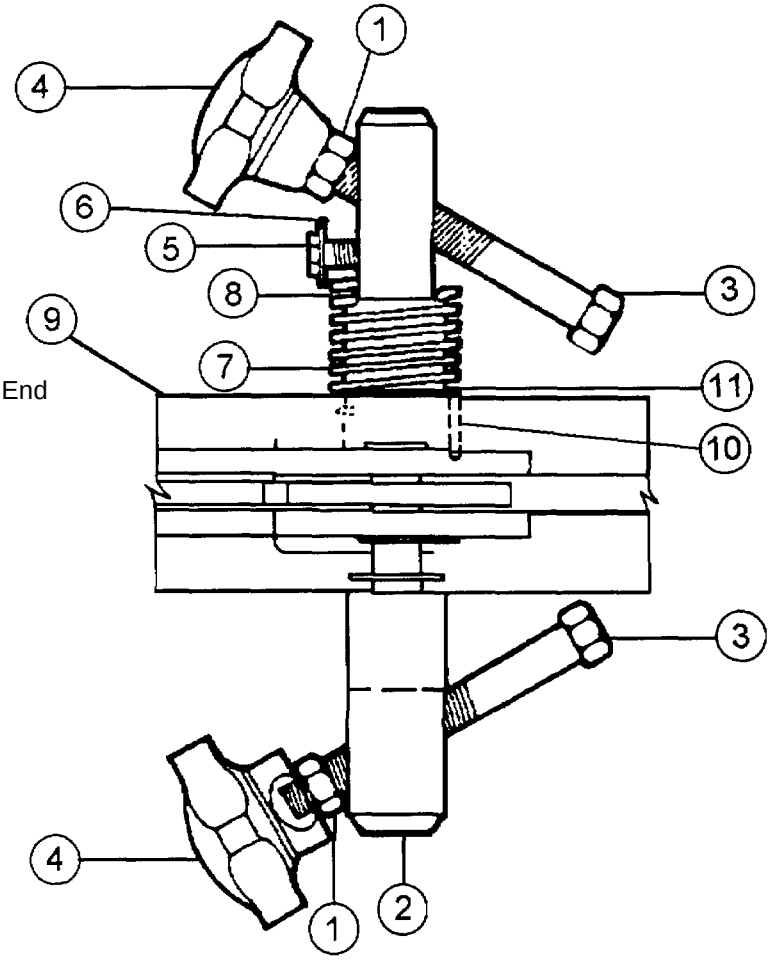

Figure 4.28. Replace or Repair Hand Knob Assembly

d. Replacement of Hand Knob Assembly

(1) Screw hex bolt (3)(see Figure 4.28) into crosspiece (2), opposite end of cap screw hole, using 9/16-inch combination box/open-end wrench so that head of bolt is pointed toward the center.

(2) Thread hex nut (1) and hand knob (4) onto hex bolt (3).

(3) Slide crosspiece (2) into launcher rail so that hand knobs will be toward the rear.

(4) Install retaining ring (8) into groove on crosspiece (2) with retaining ring pliers.

(5) Slide spring (7) onto crosspiece (2) so that the straight end (11) enters launcher rail.

(6) Install hex-head capscrew (5) with flatwasher (6) through hook of spring (10) into crosspiece (2) using 7/16-inch socket wrench.

(7) Rotate assembly down.

(8) Thread hex bolt (3) into crosspiece (2) using 9/16-inch combination box/open-end wrench.

(9) Release assembly.

(10) Thread hex nut (1) and hand knob (4) onto hex bolt (3) using 9/16-inch combination box/open-end wrench.

(11) Tighten hex nut (1) against hand knob (4) using 9/16-inch combination box/open-end wrench.

4.14 REPLACE DETENT ASSEMBLY

NOTE

THIS PROCEDURE IS THE SAME FOR BOTH LEFT-HAND AND RIGHT-HAND DETENT ASSEMBLES.

a. This task covers: Remove and Replace Detent Assembly

b. Initial Setup

- **Tools**
  - General Mechanic's Tool Kit (Army NSN 5180-00-177-7033, Marine Corps NSN 5180-00-606-3566)
- **Materials/Pats**
  - Lockwasher (P/N MS35338-140)
- **Equipment Conditions**
  - Launcher on flat ground or secured to trailer
  - Launcher rail at O°

c. Removal of Detent Assemblies

NOTE

PUSHING THE DETENT HANDLE UP PRIOR TO REMOVAL WILL MAKE THE OPERATION EASIER.

(1) Using 1/2-inch socket wrench and a 1/2-inch combination box/open-end wrench, remove two hex nuts (1)(see Figure 4.29), lockwashers (2), and capscrews (3) which join detent assembly (4) to launcher rail support (5).

(2) Remove detent assembly 14).

(3) Inspect detent assembly (4) for damage or wear and replace as needed. If ball-lock pin is secured to a launcher support to be replaced, remove and install on new launcher support.

d. Replacement of Detent Assemblies

(1) Position detent assembly (4) on launcher rail support (5) with detent hinge up.

(2) Attach assembly to launcher rail support (5) with two capscrews (3), lockwashers (2), and hex nuts (1) using 1/2-inch socket wrench and a 1/2-inch combination box/open-end wrench.

Legend:

(1) Hex Nuts, 2
(2) Lockwashers, 2
(3) Capscrews
(4) Detent Assembly
(5) Launcher Rail Support

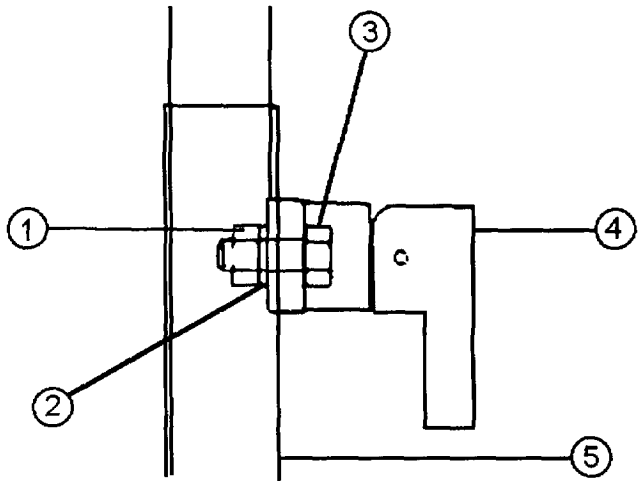

Figure 4.29. Remove and Replace Detent Assembly

4.15 REPLACE ROCKET RELEASE MECHANISM

a. This task covers: Remove and Replace Rocket Release Mechanism

b. Initial Setup

· **Tools**

- General Mechanic's Tool Kit (Army NSN 5180-00-177-7033, Marine Corps NSN 5180-00-606-3566)

· **Materials/Parts**

- Cotter pins (P/N MS24665-151 and MS24665-370)
- Graphite grease (NSN 9150-01-197-7688/7689)
- Hook spring (P/N 82A5052A0014)
- Main spring (P/N LE-063F-5SS)
- Pin (P/N MS20392-7C41)

· **Equipment Conditions**

- Ball-lock pins installed in LOCK position
- Launcher on flat ground or secured to trailer
- Launcher rail at 0°

c. Removal of Rocket Release Mechanism

(1) Remove cam weldment cover by removing the six hex-head capscrews and lockwashers with 7/16-inch combination box/open-end wrench.

(2) Remove cotter pin (1)(see Figure 4.30) and flatwasher (2) from sliding block rod (3) using needle-nose pliers.

(3) Remove cotter pin (4) and flatwasher (5) on pin (6).

(4) Remove hook spring (7) and hook (8) by removing pin (6).

(5) Remove cotter pin (9) and flatwasher (10) at handle weldment (11).

(6) Remove main spring (12) from sliding block rod (3) end.

(7) Remove cotter pin (13) and flatwasher (14) and remove main spring (12) from post by sliding it up.

(8) Remove cotter pin (15) from handle weldment (11).

(9) Remove cam weldment (16), handle weldment (11), sliding block rod (3) and sliding block (17).

(10) Check main spring (12) and hook spring (7) for wear and damage.

(11) Lubricate main spring (12) ends, sliding block rod (3) ends, sliding block (17), handle weldment (11), cam weldment (16) and hook assembly, IAW Chapter 3, paragraph 3.1.

(12) Inspect and replace defective or damaged parts as necessary.

Legend:

(1) Cotter Pin
(2) Flatwasher
(3) Sliding Block Rod
(4) Cotter Pin
(5) Flatwasher
(6) Pin
(7) Hook Spring
(8) Hook
(9) Cotter Pin
(10) Flatwasher
(11) Handle Weldment
(12) Main Spring
(13) Cotter Pin
(14) Flatwasher
(15) Cotter Pin
(16) Cam Weldment
(17) Sliding Block
(18) Collars

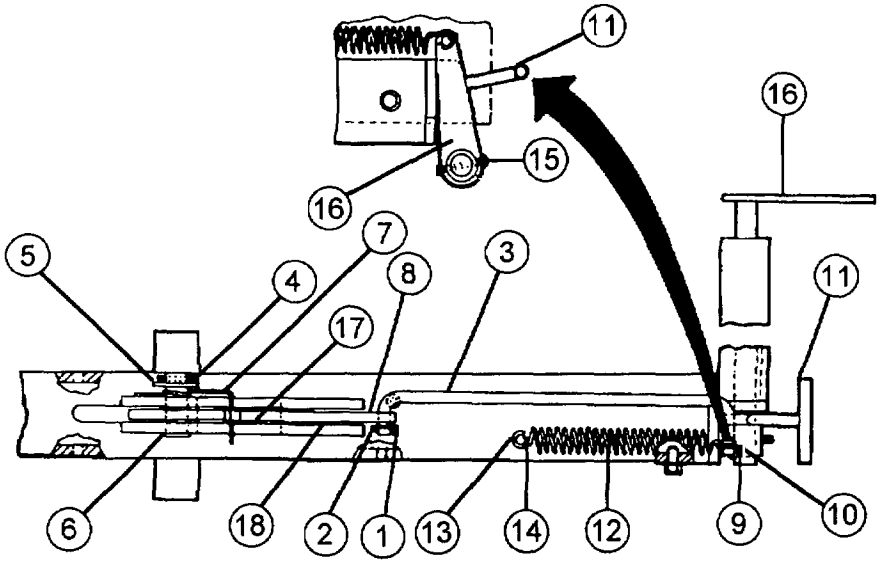

Figure 4.30. Rocket Release Assembly

d. Replacement of Rocket Release Mechanism

(1) Install cam weldment (16)(see Figure 4.30) through launcher rail holes.

NOTE

ENSURE CAM POINTS DOWN TO THE REAR OF LAUNCHER WHEN INSTALLING CAM WELDMENT (16) SO THAT IT WILL ENGAGE PIN ON RAIL SUPPORT.

(2) Align cam weldment (16) and handle weldment (11) and press cam into handle weldment (11).

(3) Install new cotter pin (15) through cam weldment (16) and handle weldment (11).

(4) Install sliding block rod (3) into handle weldment (11).

(5) Attach new main spring (12) onto sliding block rod (3) at handle weldment end.

(6) Install new flatwasher (10) and cotter pin (9).

(7) Lift sliding block rod (3) and install sliding blocks (17) below collars (18) on launcher rail.

(8) Insert sliding block rod (3) through sliding block (17).

(9) Install new flatwasher (2) and cotter pin (1) onto sliding block rod (3).

(10) Install hook (8) with hook forward by inserting between collars (18) on launcher rail and inserting pin (6).

(11) Install hook spring (7) on pin (6) ensuring that straight-end is inserting, through hole in hook (8).

(12) Install new flatwasher (5) and cotter pin (4) onto pin (6).

(13) Perform check-out:

(a) Pull back on handle.

(b) Ensure that hook aligns with cam release by listening for a click.

(c) Release handle.

(d) Ensure hook extends such that it will restrain rocket motor.

(14) Seat cam weldment cover. Install lockwashers and six lockwashers and hex-head capscrews using 7/16-inch combination box/open-end wrench.

4.16 CLINOMETER

a. Initial Setup

· **Tools**

- General Mechanic's Tool Kit (Army NSN 5180-00-177-7033, Marine Corps NSN 5180-00-606-3566)

· **Materials/Parts**

- Lockwashers (P/N 24-00157-823)

· **Equipment Conditions**

- Launcher on flat ground or secured to trailer
- Launcher rail at O°

b. Replacement of Clinometer

(1) Use 3/32 hex head wrench to remove two hex head nuts and lockwashers from back of mounting bracket and two hex head from inside mounting bracket. Remove clinometer.

(2) Position clinometer on inside of mounting bracket with two hex head screws. Install two new lockwashers and hex head nuts on back of mounting bracket and tighten.

4.17 PREPARE HYDRAULIC SYSTEM FOR COMPONENT REPLACEMENT

a. This task covers: Remove and Install Hydraulic Cover and Hoses

b. Initial Setup

· **Tools**

- General Mechanic's Tool Kit (Army NSN 5180-00-177-7033, Marine Corps NSN 5180-00-606-3566)

· **Material/Parts**

- Hydraulic fluid (NSN 9150-00-935-9807/9808)
- Industrial goggles (NSN 4240-00-052-3776)
- Laboratory apron (NSN 8415-00-634-5023)
- Plastic gloves (NSN 8030-00-763-4841)
- Wiping rags (plug reservoir)(NSN 7920-00-205-1711)

- **Equipment Conditions**
  - Launcher on flat ground or secured to trailer
- **General Safety Instructions**
  - When wear safety goggles when working with hydraulic fluid.
  - Minimize contact of skin with hydraulic fluid or wear gloves.
- **Reference**
  - Bleed Hydraulic System (para 4.9)

WARNING

TO AVOID EYE INJURY, WEAR SAFETY GOGGLES WHEN WORKING WITH HYDRAULIC FLUID.

NOTE

MOD 0 AND MOD 2 HAS PUMP VALVE LEVER FACING THE RIGHT SIDE OF THE LAUNCHER. MOD 1 AND MOD 3 HAS THE PUMP VALVE LEVER FACING THE REAR OF THE LAUNCHER.

c. Remove Hydraulic Components

(1) Relieve pressure.

(a) Disengage detents by pulling detent handle up.

(b) Insert ball-lock pins to RAISE position (sides).

(c) Rotate pump valve lever to HOLD position.

(d) Move hydraulic control valve lever to REMOTE RAISE position.

(e) After rail stops rising, move hydraulic control valve lever to MANUAL RAISE/LOWER position.

(f) Rotate pump valve lever slightly toward RELEASE position and slowly lower launcher rail to 0°.

(g) Repeat steps (c) through (f) until gage reading is zero (may require operating both levels at same time).

(h) Loosen pump handle (1)(see Figure 4.31)(with rubber boot attached) by unscrewing handle counterclockwise.

(2) Remove hydraulic cover weldment (2).

NOTE

PLACE HYDRAULIC CONTROL VALVE LEVER IN MANUAL RAISE/LOWER POSITION.

(a) Drive pin (3) from center of hydraulic control valve lever (4) with a 3/32-inch punch and hammer.

(b) Remove hydraulic control valve lever (4) by pulling straight up from lever stem (5).

(c) Remove hex head capscrew (6) with 7/16 open-end or box wrench; then remove gage cover plate (7) so that pressure gage mounting screws are accessible.

Legend:

(1) Pump Handle
(2) Weldment Cover
(3) Drive Pin
(4) Hydraulic Control Valve Lever
(5) Lever Stem
(6) Hex HD Capscrew
(7) Gage Cover Plate
(8) Cnt'sk Screws
(9) Lockwashers
(10) Hex Nuts
(11) Capscrews
(12) Lockwashers
(13) Hex Nuts
(14) Hydraulic Control Valve
(15) Cap Screws
(16) Hex Nuts
(17) Lockwashers
(18) Hose
(19) Cylinder
(20) Elbow
(21) Hex HD Bolts
(22) Washers
(23) Nuts
(24) Solenoid Valve
(25) Mating Block

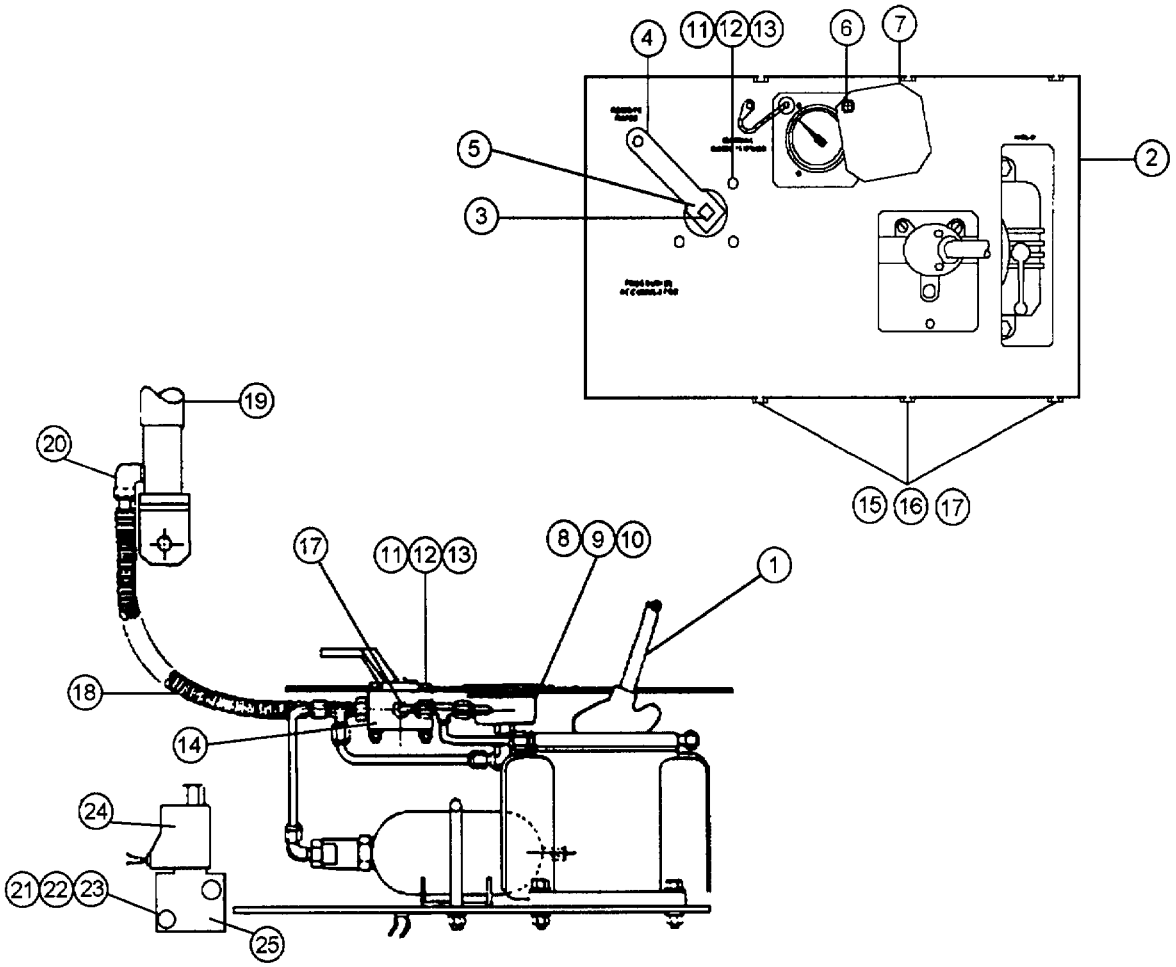

Figure 4.31. Components of Hydraulic System for MOD 0 and MOD 2/3 Launchers

(d) Remove three countersunk machine screws (8), lockwashers (9), and hex nuts (10) from hydraulic pressure gage using No. 1 cross-tip screwdriver and 5/16-inch combination box/open-end wrench.

(e) Remove four hex-head capscrews (11), lockwashers (12), and hex nuts (13) fom hydraulic control valve (14) using 7/16-inch socket wrench and 1/2-inch combination box/open-end wrench.

(f) Remove seven hex-head capscrews (15), hex nuts (16), and lockwashers (17) at top and bottom of hydraulic cover weldment (2) using a 9/16-inch socket wrench and 1/2-inch combination box/open-end wrench.

(g) For MOD 2/MOD 3 launchers, remove two hex-head bolts (21), lockwashers (22), and nuts (23) attaching solenoid valve (24) and mating block (25) to cover weldment. (See Figure 4.31)

(h) Lift hydraulic cover weldment (2)(see Figure 4.31) off hydraulic assembly, ensuring that gage gasket remains with gage.

NOTE

THERE ARE TWO DIFFERENT NON-INTERCHANGEABLE COVER WELDMENTS. FOR MODS 0 AND 2, USE P/N 82A5052C0517; FOR MODS 1 AND 3, USE P/N 82A5052A0517.

(3) Remove hydraulic hose.

(a) Using two 11/16-inch combination box/open-end wrenches, disconnect hydraulic hose (18)(see Figure 4.31) from cylinder (19) and elbow (20).

(b) Plug hydraulic hose (18) and cylinder (19) with caps.

NOTE

- **DO NOT ALLOW END OF HOSE TO DROP SINCE HYDRAULIC FLUID WILL RUN OUT.**

- **ASSEMBLY IS NOW READY FOR FURTHER COMPONENT REPAIR ACTIONS. WHEN THESE HAVE BEEN COMPLETED, RE-INSTALL ASSEMBLY USING THE FOLLOWING PROCEDURE.**

d. Installation of Hydraulic Components

(1) Install hydraulic hose.

(a) Remove cap from hose (18)(see Figure 4.31) and cylinder (19). Wrap hole connector threads with anti-seize tape.

(b) Reconnect hose (18) to cylinder (19) and elbow (20) using 7/8 and 3/4 inch combination box/open-end wrenches.

(2) Install hydraulic cover weldment (2).

(a) Place hydraulic cover weldment (2) over hydraulic assembly, aligning, seven holes in hydraulic cover weldment (2) with holes in launcher.

(b) Install seven hex-head capscrews (15), hex nuts (16), and lockwashers (17) into cover weldment (2) using 9/16-inch socket wrench and K-inch combination box/open-end wrench.

(c) For MOD 2/MOD 3 Launchers, attach mating block (25) and solenoid valve (24) to cover weldment using two hex-head bolts (21), washers (22), and hex nuts (23)(see Figure 4.31).

NOTE

ENSURE GAGE GASKET IS INSTALLED WITH GAGE.

(d) Install three countersunk machine screws (8), along with lockwashers (9) and hex nuts (10), through cover into pressure gage, and tighten with No. 1 cross-tip screwdriver and 5/16-inch box/open-end wrench.

(e) Using a K-inch socket wrench and 7/16-inch combination box/open-end wrench, attach hydraulic control valve body (14)(see Figure 4.31) to hydraulic cover weldment (2) using four hex nuts (13), lockwashers (12), and hex-head capscrews (11).

CAUTION

ENSURE CONTROL VALVE LEVER POINTS TO THE MANUAL RAISE/LOWER POSITION TO GUARANTEE CORRECT ALIGNMENT.

(f) Slide hydraulic control valve lever (4) onto lever stem (5).

(g) Turn hydraulic control valve lever (4) counterclockwise until it stops. Handle should be in MANUAL RAISE/LOWER position; reposition if necessary.

NOTE

A COTTER PIN MAY BE USED IN PLACE OF SPRING PIN.

(h) Install new drive pin (3) into side of hydraulic control valve lever (4).

(i) Install pump handle (1) by screwing clockwise into hand pump and secure rubber boot by pulling over boss.

e. Follow-on Maintenance

(1) Bleed Hydraulic System (para 4.9).

4.18 REPLACE HYDRAULIC CYLINDER

NOTE

THE USUAL CAUSE FOR REPLACEMENT OF HYDRAULIC CYLINDER IS LEAKAGE OF ITS MAIN SEAL. A KIT IS AVAILABLE FOR REPAIR OF THE CYLINDER AT DIRECT SUPPORT. CLASS II LEAKING CYLINDERS SHOULD, THEREFORE, BE FORWARDED TO DIRECT SUPPORT LEVEL FOR IMMEDIATE REPAIR OR FLOAT PURPOSES. CLASS I LEAKS WILL NORMALLY NOT REQUIRE REPAIR OR REPLACEMENT. ALL CYLINDERS WITH CLASS III LEAKS MUST BE REPAIRED OR REPLACED.

a. This task covers: Remove and Install Hydraulic Cylinder

b. Initial Setup

- **Tools**
  - General Mechanic's Tool Kit (Army NSN 5180-00-177-7033, Marine
  - Corps NSN 5180-00-606-3566)
- **Materials/Parts**
  - Anti-seize tape (NSN 8030-00-889-3534)
  - Cotter pin (P/N 24665-372)
  - Cylinder (P/N 82A5052A0503)
  - Hydraulic fluid (NSN 9150-00-935-9807/9808)
  - Industrial goggles (NSN 4240-00-052-3776)
  - Laboratory apron (NSN 8415-00-634-5023)
  - Plastic gloves (NSN 8030-00-763-4841)
  - Wiping rags (NSN 7920-00-205-1711)
- **Equipment Conditions**
  - Launcher on flat ground or trailer
  - Relieve hydraulic pressure and remove hydraulic hose (para 4.17c(1)).

- **General Safety Instructions**
  - Minimize contact of skin with hydraulic fluid or wear gloves.

NOTE

FOR CYLINDER REPLACEMENT, IT IS NOT NECESSARY TO REMOVE COVER, ETC., FROM REST OF HYDRAULIC COMPONENTS.

- **References**
  - Bleed Hydraulic System (para 4.9)

WARNING

TO AVOID EYE INJURY, WEAR SAFETY GOGGLES WHEN WORKING WITH HYDRAULIC FLUID.

c. Remove Hydraulic Cylinder

(1) Remove two cotter pins (1) (see Figure 4.32) and two outsideflatwashers (2).

(2) Push out clevis pins (3) at cylinder top and bottom along with two inside flatwashers (2) (slight up and down movement of rail (by hand) will help removal).

(3) Withdraw cylinder (4) from launcher weldment (5) and launcher rail weldment (6).

(4) Unscrew rod-end (12) from cylinder (4).

(5) Remove cylinder cover weldment (7) from cylinder (4).

(6) Secure cylinder (4) in vise and unscrew street elbow (8) from cylinder (4).

(7) Unscrew two cap screws (9) and remove lockwashers (10) from bottom of cylinder (4) utilizing a crescent wrench.

(8) Remove clevis weldment (11) from cylinder (4).

d. Installation of Hydraulic Cylinder

(1) Remove shipping plug from new cylinder (4).

(2) Install new shipping plug into old cylinder (4).

(3) Remove cap from top of new cylinder (4).

(4) Install new cap onto old cylinder (4) (see Figure 4.32) and turn in through maintenance channels for repair.

(5) Secure new cylinder (4) in vise and put anti-seize tape on elbow (8) and rod end (12).

(6) Install elbow (8) into new cylinder (4). Tighten so that outlet of elbow (8) is pointing toward nearer end of cylinder (4).

(7) Install clevis weldment (11) onto bottom of cylinder and secure with capscrews (9) and lockwashers (10) into bottom of cylinder through clevis weldment. Remove cylinder from vise.

(8) Place cylinder cover weldment (7) over cylinder (4).

(9) Install and tighten rod end (12) into top of cylinder (4).

(10) Depress cylinder (4) fully.

(11) Place cylinder (4) into launcher weldment (5) and rod end (12) into rail weldment (6) so that elbow (8) is pointing toward front of launcher.

(12) Insert one flatwashers (2) over each clevis pin (3).

(13) Press clevis pins (3) through holes in base and top.

(14) Install one flatwasher (2) and a new cotter pin (1) on each clevis pin.

(15) Attach hydraulic hose (para 4.17).

(16) Bleed hydraulic system (para 4.9).

e. Test of Hydraulic Cylinder. Test cylinder operation by manually raising and lowering the launcher rail assembly. Test the system next by using the hydraulic accumulator. The launcher assembly should operate smoothly without jerky or erratic motions when operated using the hydraulic accumulator.

Legend:

(1) Cotter Pins
(2) Flatwashers
(3) Clevis Pins
(4) Cylinder
(5) Launcher Weldment
(6) Rail Weldment
(7) Cylinder Cover
(8) Street Elbow
(9) Cap Screws
(10) Lockwashers
(11) Clevis Weldment
(12) Rod End

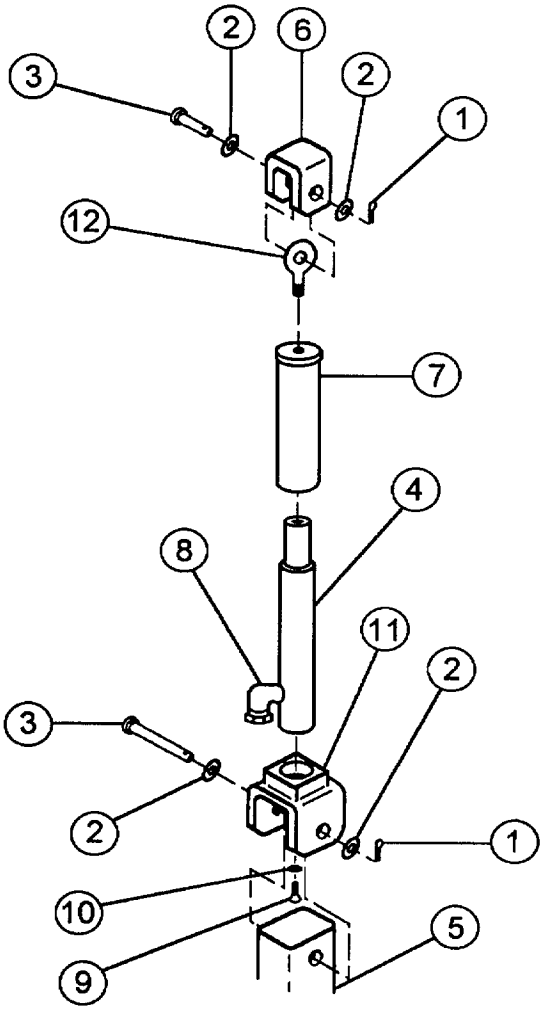

Figure 4.32. Removal and Installation of Hydraulic Cylinder and Components

4.19 REPLACE HYDRAULIC ACCUMULATOR

a. <u>This task covers: Remove and Replace Hydraulic Accumulator</u>

b. <u>Initial Setup</u>

- **Tools**

  - General Mechanic's Tool Kit (Army NSN 5180-00-177-7033, Marine Corps NSN 5180-00-606-3566)
  - Two adjustable open-end wrenches (NSN 5120-00-423-6728)

- **Materials/Parts**

  - Accumulator (P/N 82A5052A0501)
  - Anti-See Tape (NSN 8030-00-889-3534)
  - Hydraulic Fluid (NSN 9150-00-935-9807/9808)
  - Industrial Goggles (NSN 4240-00-052-3776)
  - Laboratory Apron (NSN 8415-00-634-5023)
  - Plastic Gloves (NSN 8030-00-763-4841)
  - Wiping Rags (NSN 7920-00-205-1711)

- **Equipment Conditions**

  - Launcher secured to trailer or rear of launcher raised above the ground.
  - Relieve hydraulic pressure (para 4.17)

- **General Safety Instructions**

  - Minimize contact of skin with hydraulic fluid or wear gloves.

NOTE

ACCUMULATOR CAN BE REMOVED WITHOUT REMOVING COVER FROM HYDRAULIC ASSEMBLY (PARA 4.14) BUT IT MAY BE EASIER FOR MANY MECHANICS TO REMOVE THE COVER.

- **References**

  - Pressure check-out (para 2.6.1)
  - Bleed Hydraulic System (para 4.9)

WARNING

TO AVOID EYE INJURY, WEAR SAFETY GOGGLES WHEN WORKING WITH HYDRAULIC FLUID.

NOTE

NITROGEN WILL BE AVAILABLE TO SOME UNITS BUT MANY WILL HAVE TO TAKE THE ACCUMULATOR TO DIRECT/GENERAL SUPPORT LEVEL FOR REPRESSURIZATION. IN ANY CASE, REPRESSURIZATION SHOULD BE DONE BY PERSONS FAMILIAR WITH HIGH PRESSURE GAS OPERATIONS. FOR THESE REASONS, THE PROCEDURE IS GIVEN IN CHAPTER 5, Para 5.15.

c. Removal of Hydraulic Accumulator for MOD 0 and MOD 1 Launchers

(1) Loosen B-nut (1) (see Figure 4.33) at elbow (2) using 9/16-inch combination box/open-end wrench.

(2) Disconnect elbow (2) at sleeve (3) by loosening the B-nut (4) with a 1-1/16-inch and a 1-1/8-inch wrench or two adjustable wrenches.

(3) Unscrew two hex nuts (5) under base plate (6) using 3/4-inch combination box/open-end wrench and remove along with two lockwashers (7).

(4) Remove U-bolt (8) from accumulator restrainer (9).

(5) Lift accumulator (10) straight up.

(6) Turn in accumulator (10) through maintenance channels.

Legend:

(1) B-Nut
(2) Elbow
(3) Sleeve
(4) B-Nut
(5) Hex Nuts
(6) Base Plate
(7) Lockwashers
(8) U-Bolt
(9) Accumulator Restrainer
(10) Accumulator

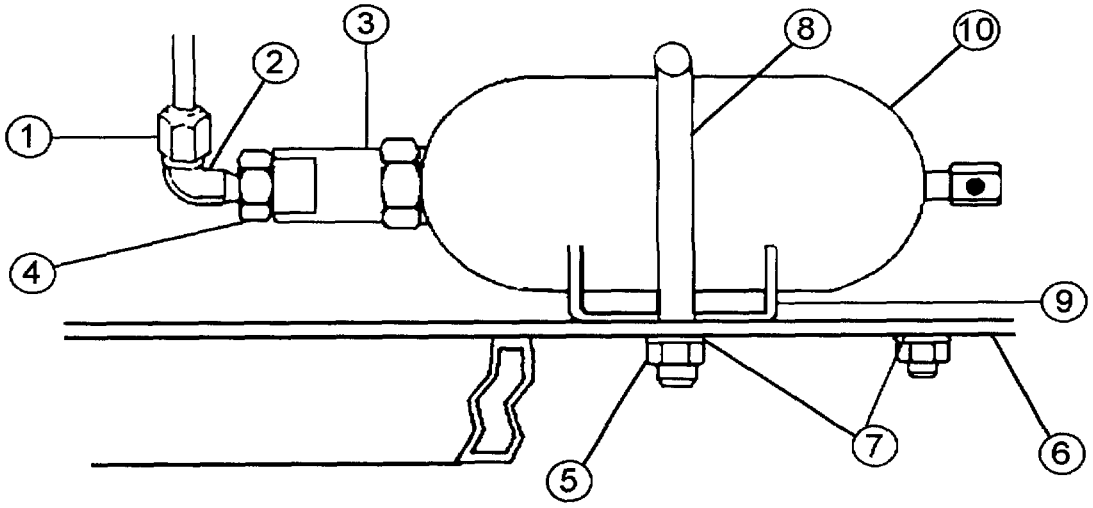

Figure 4.33. Hydraulic Accumulator for MOD 0 and MOD 1 Launchers

d. Replacement of Hydraulic Accumulator for MOD 0 and MOD 1 Launchers

(1) Have new accumulator (10) (see Figure 4.33) charged with nitrogen to 2,250 psi at normal room temperature (refer to para 5.15 and Table 5.1 for other temperatures).

(2) Mount new accumulator (10) on accumulator restrainer (9).

(3) Install U-bolt (8) over accumulator into holes in base plate (6).

(4) Install two lockwashers (7) and two hex nuts (5) on U-bolt (8) and tighten with 3/4-inch wrench.

(5) Remove shipping cap from new accumulator (10).

(6) Wrap elbow (2) threads with anti-seize tape.

(7) Attach elbow (2) to sleeve (3) by tightening B-nut (4) with an adjustable wrench.

(8) Attach line and B-nut (1) so that elbow (2) is pointed up with 9/16-inch combination box/open-end wrench.

(9) Perform pressure check-out (para 2.6.1).

(10) Bleed hydraulic system (para 4.9).

(11) If pressure on gage is not normal, have accumulator recharged to 2,250 psi at room temperature. Check pressure again.

(12) Reinstall hydraulic cover weldment (para 4.17), if it was removed.

e. Removal of Hydraulic Accumulator for MOD 2 and MOD 3 Launchers

(1) Remove adaptor (1)(see Figure 4.34) from sleeve (2) by unscrewing.

(2) Unscrew two hex nuts (3) under base plate (4) using 3/4-inch box/open-end wrench and remove along with two lockwashers (5).

(3) Remove U-bolt (6) from accumulator restrainer (7).

(4) Lift accumulator (8) straight up.

(5) Turn in accumulator (8) through maintenance channels.

f. Replacement of Hydraulic Accumulator for MOD 2 and MOD 3 Launchers

(1) Have new accumulator (8) (see Figure 4.34) charged with nitrogen to 2,250 psi at normal room temperature (refer to para 5.15 and Table 5.1 for other temperatures).

(2) Mount new accumulator (8) on accumulator restrainer (7).

(3) Install U-bolt (6) over accumulator into holes in base plate (4), (4) Install two lockwashers (5) and two hex nuts (3) on U-bolt (6) and tighten with 3/4-inch wrench.

(5) Remove shipping cap from new accumulator (8).

(6) Wrap adaptor (1) threads with anti-seize tape.

(7) Install adaptor (1) on sleeve (2).

(8) Perform pressure check-out (para 2.6.1).

(9) Bleed hydraulic system (para 4.9).

(10) If pressure on gage is not nominal, have accumulator recharged to 2,250 psi at room temperature. Check pressure again.

(11) Reinstall hydraulic cover weldment (para 4.17) if it was removed.

Legend:

(1) Adaptor
(2) Sleeve
(3) Hex-Nuts
(4) Base Plate
(5) Lockwashers
(6) U-Bolt
(7) Accumulator Restrainer
(8) Accumulator

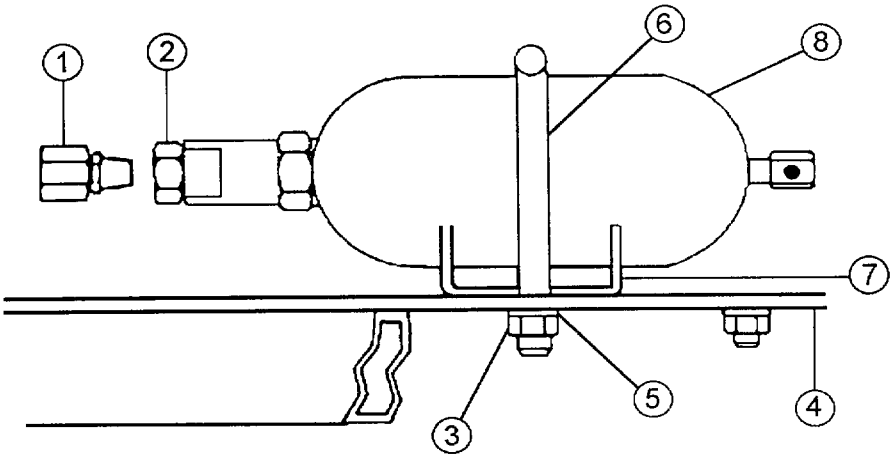

Figure 4.34. Hydraulic Accumulator for MOD 2 and MOD 3 Launchers

4.20 REPLACE HAND PUMP

a. This task covers: Remove and Replace Hydraulic Hand Pump

b. Initial Setup

- **Tools**
  - General Mechanic's Tool Kit (Army NSN 5180-00-177-7033, Marine Corps NSN 5180-00-606-3566)
- **Materials/Parts**
  - Anti-seize tape (NSN 8030-00-889-3534)
  - Hydraulic Hand Pump (P/N 82A5052A0502)
  - Hydraulic Fluid (NSN 9150-00-935-9807/9808)
  - Industrial Goggles (NSN 4240-00-052-3776)
  - Laboratory Apron (NSN 8415-00-634-5023)
  - Plastic Gloves (NSN 8030-00-763-4841)
  - Wiping Rags (NSN 7920-00-205-1711)
- **Equipment Conditions**
  - Hydraulic pump handle and cover weldment removed (para 4.17)
  - Launcher secured to trailer or rear of launcher raised above the ground.
  - Pressure relieved (para 4.17).
- **General Safety Instructions**
  - Minimize contact of skin with hydraulic fluid or wear gloves.
- **References**
  - Pressure Check-out (para 2.6.1)
  - Bleed Hydraulic System (para 4.9)

WARNING

- **TO AVOID EYE INJURY, WEAR SAFETY GOGGLES WHEN WORKING WITH HYDRAULIC FLUID.**
- **WEAR PLASTIC GLOVES AND LABORATORY APRON WHEN WORKING WITH HYDRAULIC FLUID TO AVOID PERSONNEL INJURY.**

c. Removal of Hand Pump for MOD 0 and MOD 1 Launchers

(1) Place drain pan under pump reservoir drain plug (1) (see Figure 4.35), if present. If drain plug is not present, proceed to step 5.

(2) Remove pump reservoir drain plug (1) with 5/8-inch socket wrench.

(3) Allow hydraulic fluid to drain from hand pump (2).

NOTE

DISPOSAL OF HYDRAULIC FLUID MUST BE IAW LOCAL, STATE AND FEDERAL REGULATION.

(4) Reinstall drain plug (1). Tighten gently.

(5) Loosen B-nut (3) with 9/16-inch combination box/open-end wrench front fitting (4).

(6) Remove four hex nuts (5) and lockwashers (6) on base plate (7) with two 9/16-inch socket wrenches and withdraw four hex-head bolts (8).

(7) Withdraw hand pump (2) from base plate (7) by lifting straight up.

(8) If no drain plug (1) is present, remove dipstick (9) and turn pump upside down over drain pan to drain hydraulic fluid.

(9) Remove rubber boot (10) for reuse and turn in hand pump (2) with handle through maintenance channels for repair.

Legend:

(1) Drain Plug
(2) Hydraulic Hand Pump
(3) B-Nut
(4) Fitting, Front
(5) Hex Nuts
(6) Lockwashers
(7) Base Plate
(8) Hex Bolts
(9) Dipstick or Plug
(10) Rubber Boot

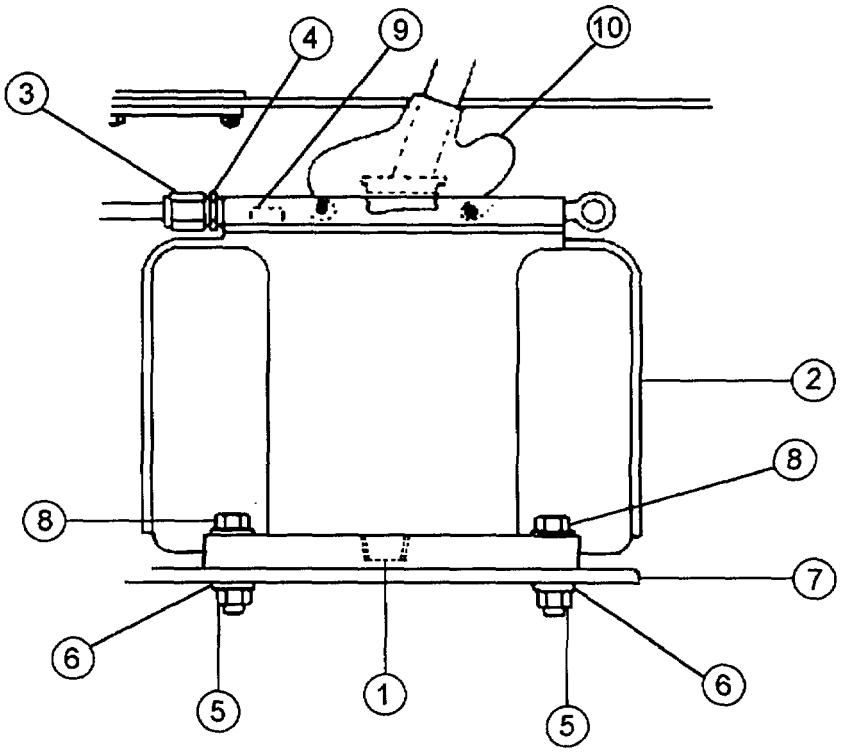

Figure 4.35. Remove Hydraulic Hand Pump for MOD 0 and MOD 1 Launchers

d. Replacement of Hand Pump for MOD 0 and MOD 1 Launchers

(1) Ensure pump reservoir drain plug (1)(see Figure 4.36), if present, is gently tightened into base of new hand pump (2).

(2) Lower hand pump (2) to base plate (7) aligning holes in bottom of hand pump (2) with those in base plate so that pump valve lever is toward right-side of launcher for MOD 0 and MOD 2 or to the rear of launcher for MOD 1 and MOD 3 launchers.

(3) Insert four hex-head bolts (8) through holes.

(4) Install four lockwashers (6) and hex nuts (5) and tighten hex nuts (5) using two 9/16-inch combination box/open-end wrenches.

(5) Secure B-nut (3) to fitting (4) with two 9/16-inch combination box/open-end wrenches.

(6) Remove dipstick (9).

(7) Fill hand pump (2) reservoir with 2-1/2 quarts of hydraulic fluid.

(8) Temporarily re-install pump handle and bleed hydraulic system (para 4.9) and top-up reservoir with hydraulic fluid.

(9) Perform pressure check-out (para 2.6.1).

(10) Replace hydraulic cover weldment (para 4.17) and handle and rubber boot (10).

Legend:

(1) Drain Plug
(2) Hydraulic Hand Pump
(3) B-Nut
(4) Fittings
(5) Hex Nut
(6) Lockwashers
(7) Base Plate
(8) Hex Bolts
(9) Dip Stick or Plug
(10) Rubber Boot

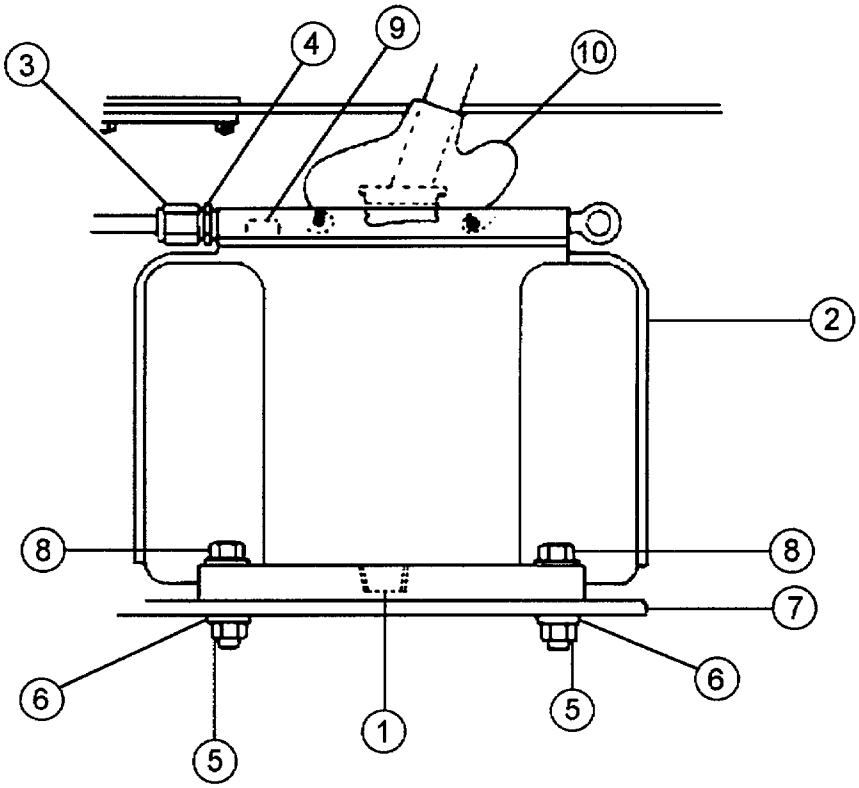

Figure 4.36. Replace Hand Pump for MOD 0 and MOD 1 Launchers

e. Removal of Hand Pump for MOD ? and MOD 3 Launchers

(1) Place drain pan under pump reservoir drain plug (1)(see Figure 4.37), if present. If drain plug is not present, proceed to step 5.

(2) Remove pump reservoir drain plug (1) with 5/8-inch socket wrench.

(3) Allow hydraulic fluid to drain from hand pump (2).

(4) Reinstall drain plug (1). Tighten gently.

(5) Loosen elbow (3) from hose (4).

(6) Unscrew adaptor (5), with elbow (3) attached, from hand pump (2).

(7) Remove four hex nuts (6) and lockwashers (7) on base plate (8) with two 9/16-inch socket wrenches and withdraw four hex-head bolts (9).

(8) Withdraw hand pump (2) from base plate (8) by lifting straight up.

(9) If no drain plug (1) is present, remove dipstick (10) and turn pump upside down over drain pan to drain hydraulic fluid.

(10) Remove rubber boot (11) for reuse and turn in hand pump (2) with handle through maintenance channels for repair.

Legend:

(1) Drain Plug
(2) Hydraulic Hand Pump
(3) Elbow
(4) Hose
(5) Adaptor
(6) Hex Nuts
(7) Lockwashers
(8) Base Plate
(9) Hex Bolts
(10) Dip Stick or Plug
(11) Rubber Boot
(12) Handle

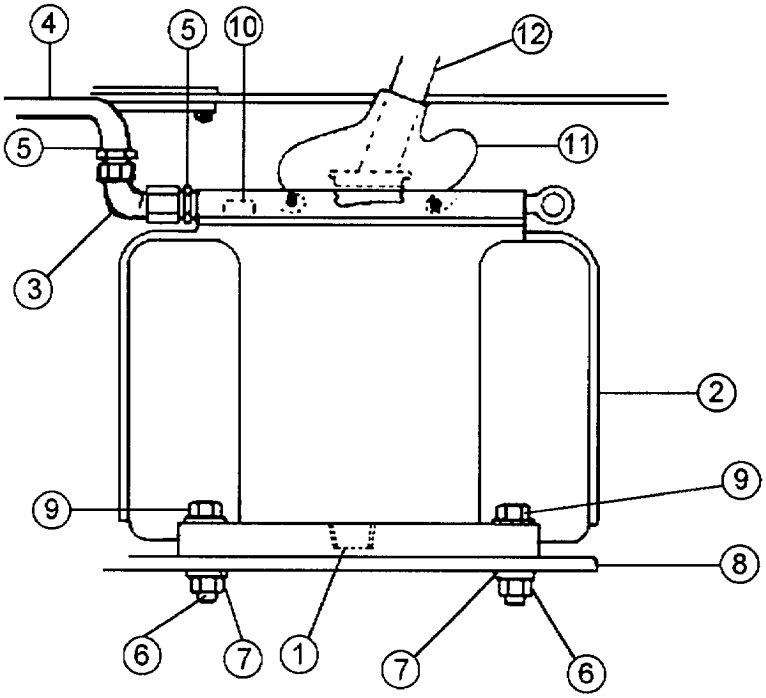

Figure 4.37. Removal of Hand Pump for MOD 2 and MOD 3 Launchers

f. Replacement of Hand Pump for MOD 2 and MOD 3 Launchers

(1) Ensure pump reservoir drain plug (1)(see Figure 4.38), if present, is gently tightened into base of new hand pump (2).

(2) Lower hand pump (2) to base plate (8) aligning holes in bottom of hand pump with those in base plate so that pump valve lever is toward right side of launcher for the MOD 0 and MOD 2 launchers or to the rear on MOD 1 and MOD 3 launchers.

(3) Insert four hex-head bolts (9) through holes.

(4) Install four lockwashers (7) and hex nuts (6) and tighten hex nuts using two 9/16-inch combination box/open-end wrenches.

(5) Screw adaptor (5), with elbow (3) attached, onto hand pump (2).

(6) Screw elbow (3) onto hose (4).

(7) Remove dipstick (10).

(8) Fill hand pump (2) reservoir with 2-1/2 quarts of hydraulic fluid.

(9) Temporarily re-install pump handle and bleed hydraulic system (para 4.9) and top up reservoir with hydraulic fluid.

(10) Perform pressure check-out (para 2.6.1).

(11) Replace hydraulic cover weldment (para 4.17) and handle (12) and rubber boot (11).

Legend:

(1) Drain Plug
(2) Hydraulic Hand Pump
(3) Elbow
(4) Hose
(5) Adaptor
(6) Hex Nuts
(7) Lockwashers
(8) Base Plate
(9) Hex Bolts
(10) Dip Stick or plug
(11) Rubber Boot
(12) Handle

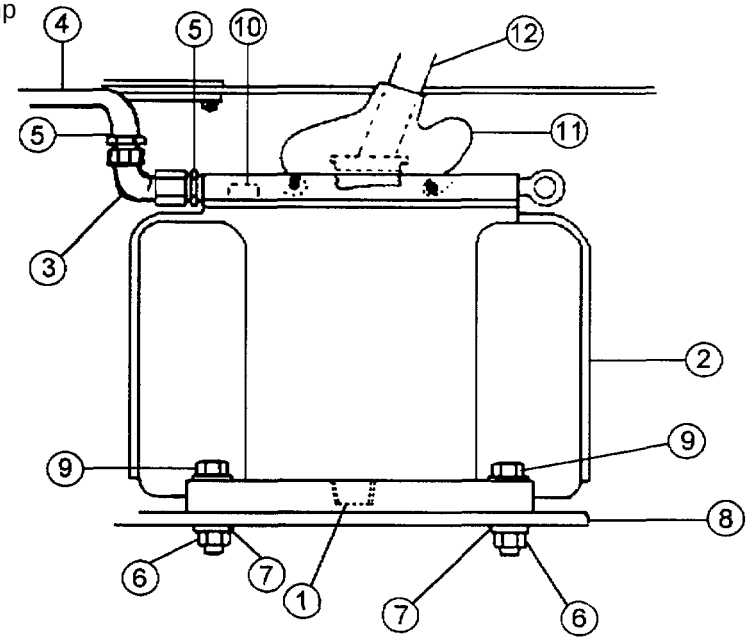

Figure 4.38. Replacement of Hand Pump for MOD 2 and MOD 3 Launchers

4.21 REPLACE HYDRAULIC CONTROL VALVE

NOTE

A SEAL KIT IS AVAILABLE FOR REPAIR OF THIS VALVE AT DIRECT SUPPORT/GENERAL SUPPORT.

a. This task covers: Removal and Replacement of the Hydraulic Control Valve

b. Initial Setup

- **Tools**
  - General Mechanic's Tool Kit (Army NSN 5180-00-177-7033, Marine Corps NSN 5180-00-606-3566)
- **Materials/Parts**
  - Anti-seize tape (NSN 8030-00-889-3534)
  - Hydraulic fluid (NSN 9150-00-935-9807/9808)
  - Industrial goggles (NSN 4240-00-052-3776)
  - Laboratory apron (NSN 8415-00-634-5023)
  - Plastic gloves (NSN 8030-00-763-4841)
  - Wiping rags (NSN 7920-00-205-1711)
- **Equipment Conditions**
  - Launcher on flat ground or secured to trailer.
  - Prepare hydraulic system for component replacement (para 4.17)
  - Release hydraulic pressure (para 4.17)
- **General Safety Instructions**
  - See safety summary at front of book.
- **References**
  - Pressure Check-out (para 2.6.1)
  - Bleed Hydraulic System (para 4.9)

WARNING

TO AVOID EYE INJURY, WEAR SAFETY GOGGLES WHEN WORKING WITH HYDRAULIC FLUID.

c. Removal of Hydraulic Control Valve for MOD 0 and MOD 1 Launchers

(1) Unscrew fluid dampener (1) (see Figure 4.39) at elbow (2) with one 7/8-inch and one 3/4-inch combination box/open-end wrench. Withdraw hydraulic hose line from elbow (2).

(2) Unscrew fitting (3) on tee (4) using 9/16-inch combination box/open-end wrench. This line is attached to the pressure gage (not shown). Ensure you are holding the pressure gage during removal.

(3) Support hydraulic control valve so that hydraulic lines are not broken.

(4) Unscrew fitting (5) on tee (4) using two 9/16-inch wrenches.

(5) Unscrew B-nuts (6) and (7) using two 9/16 and 5/8-inch wrenches, respectively.

(6) Remove hydraulic control valve (8).

(7) Unscrew tee (4) from left port (9) using a 9/16-inch combination box/open-end wrench and a 15/16 combination box/open-end wrench.

(8) Disconnect elbow (2) from top port (10) with 3/4-inch combination box/open-end wrench and a 15/16-inch combination box/open-end wrench.

(9) Unscrew male connector (11) from right port (12) using 9/16-inch combination box/open-end wrench and 15/16-inch combination box/open-end wrench.

(10) Unscrew check valve (13) from bottom port (14) using 5/8-inch combination box/open-end wrench and 15/16-inch combination box/open-end wrench.

(11) Turn in hydraulic control valve (8) through maintenance channels for repair.

Legend:

(1) Fluid Dampener
(2) Elbow
(3) B-Nut
(4) Tee
(5) B-Nut
(6) B-Nut
(7) B-Nut
(8) Hydraulic Control Valve
(9) Valve Adaptor, Left Port
(10) Valve Adaptor Top Port
(11) Connector, Male
(12) Valve Adaptor, Right Port
(13) Check Valve
(14) Valve Adaptor, Bottom Port
(15) Valve Lever
(16) Valve Stem

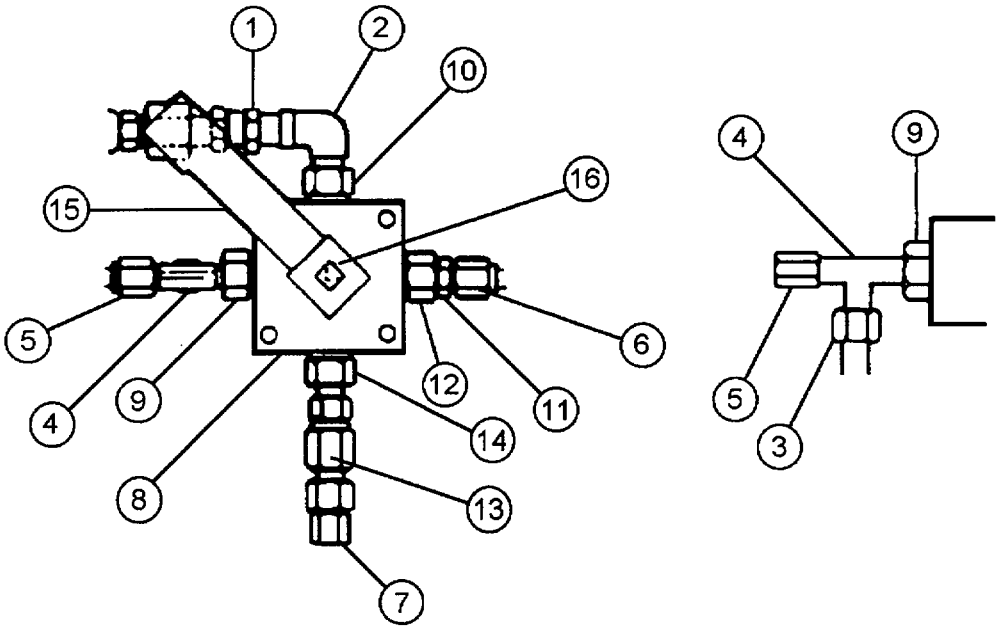

Figure 4.39. Removal and Replacement of Hydraulic Control Valve for MOD 0 and MOD 1 Launchers

d. Replacement of Hydraulic Control Valve for MOD 0 and MOD 1 Launchers

(1) Wrap all exposed threads with anti-seize tape.

(2) Align new hydraulic control valve (8)(see Figure 4.39):

(a) Place hydraulic control valve lever (15) on stem (16) temporarily

(b) Turn valve lever (15) counterclockwise as far as possible.

(c) Position valve body (8) so that the "V" stamped on the control stem (16) points between left ports (9) and bottom port (14) as in diagram.

(d) Remove hydraulic control valve lever (15).

(3) Screw check valve (13) into bottom port (14) using 5/8-inch and 15/16-inch wrenches.

(4) Screw male connector (11) into right port (12) using 9/16-inch and 15/16-inch wrenches.

(5) Screw tee (4) into left port (9) using 9/16-inch and 15/16-inch wrenches. Tee is to be pointing down.

(6) Connect elbow (2) with top port (10) with 3/4-inch and 15/16-inch wrenches. Elbow should point toward left port (9)(left).

(7) Align hydraulic control valve (8) so that right port (12) is toward B-nut (6), the hydraulic line leading to the hydraulic hand pump.

(8) Support hydraulic control valve (8) until all connections are made.

(9) Screw B-nut (6) onto male connector (11) using 9/16-inch and 15/16-inch wrenches.

(10) Screw B-nut (7) onto check valve (13) using two 5/8-inch wrenches.

(11) Screw B-nut (5) onto tee (4) using two 9/16-inch wrenches. (When reinstalling hydraulic cover weldment, B-nut (5) may need to be loosened so that proper alignment may occur.)

(12) Connect pressure gage assembly, B-nut (3) to bottom of tee (4). Ensure pressure gage is in proper position and tighten B-nut (3) using 9/16-inch wrench.

(13) Screw Hydraulic hose into elbow (2) by screwing fluid dampener (1) using, 7/8-inch and 11/16-inch wrench.

(14) Reconnect hydraulic hose to cylinder using two 11/16-inch wrenches.

(15) Temporarily install pump handle to bleed hydraulic system (para 4.9).

(16) Perform pressure check-out (para 2.6.1).

(17) Check for leaks in hydraulic lines and fittings.

(18) Reinstall hydraulic cover weldment (para 4.17).

e. <u>Removal of Hydraulic Control Valve for MOD 2 AND MOD 3 Launchers</u>

(1) Remove hose (1) (P/N 82A5052A2033) (see Figure 4.40) from adaptor
(2) on the control valve (3) to solenoid valve line.

(2) Remove fluid dampener (4) from the tee (5) on the hydraulic top control valve cylinder port (6).

(3) Remove hose (7) (P/N 82A5052A2032) from elbow (8) on the control valve to accumulator line.

(4) Remove hose (9) (P/N 82A5052A2042-2) from adaptor (10) on solenoid valve.

(5) Remove hose (9) from branch of tee (11).

(6) Support hydraulic control valve so that hydraulic lines are not broken.

(7) Unscrew B-nuts (12) and (13).

(8) Remove hydraulic control valve (3).

(9) Unscrew tee (5), with adaptor (2) attached, from hydraulic control valve top port (6) and remove.

(10) Unscrew tee (11) from hydraulic control valve left port (14) and remove.

(11) Unscrew male connector (15) from hydraulic control valve right port (16) and remove.

(12) Unscrew check valve (17) from hydraulic control valve bottom port (18) and remove.

(13) Turn in hydraulic control valve through maintenance channels for repair.

Legend:

(1) Hose, A2033
(2) Adaptor
(3) Control Valve
(4) Fluid Dampener
(5) Tee
(6) Valve Adaptor, Top Port
(7) Hose, 2032
(8) Elbow
(9) Hose, 2042-2
(10) Adaptor
(11) Tee
(12) B-Nut
(13) B-Nut
(14) Valve Adaptor, Left Port
(15) Male Connector
(16) Valve Adaptor, Right Port
(17) Check, Valve
(18) Valve Adaptor, Bottom Port

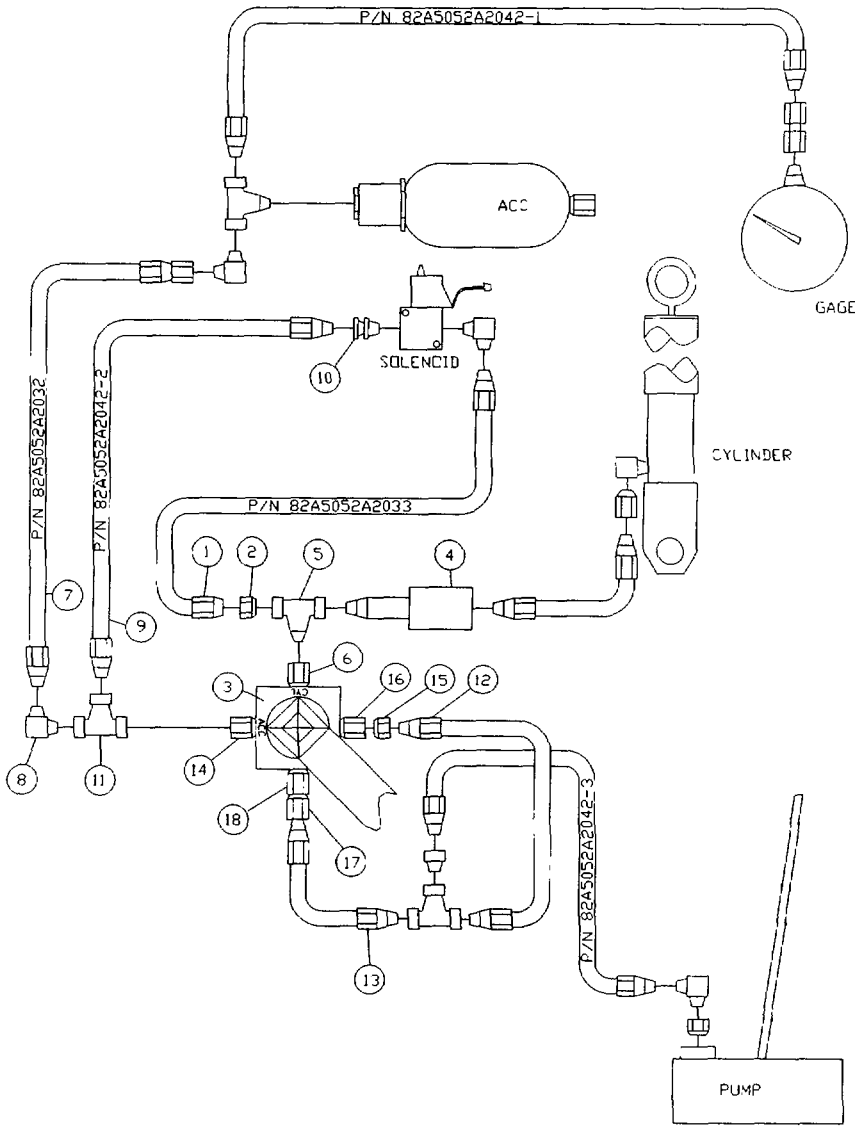

Figure 4.40. Removal and Replacement of Hydraulic Control Valve of MOD 2 and MOD 3 Launchers

f. Replacement of Hydraulic Control Valve for MOD 2 and MOD 3 Launchers

(1) Wrap all exposed threads with anti-seize tape.

(2) Align new hydraulic control valve:

(a) Place hydraulic control valve lever on stem temporarily

(b) Turn lever counterclockwise as far as possible,

(c) Position valve body (3) {see Figure 4.40) so that the "V" stamped on the control stem points between ports left (14) and up (16).

(d) Remove hydraulic control valve lever.

(3) Screw check valve (17) into hydraulic control valve right port (18).

(4) Screw male connector (15) into up port (16).

(5) Screw tee (11) onto hydraulic control valve left port (14).

(6) Screw tee (5), with adaptor (2) attached, onto hydraulic control valve bottom port (6).

(7) Align hydraulic control valve (3) so that up port (16) is toward B-nut (12) and the hydraulic line is leading to the hydraulic hand pump.

(8) Support hydraulic control valve until all connections are made.

(9) Screw B-nut (12) onto male connector (15).

(10) Screw B-nut (13) onto check valve (17).

(11) Attach hose (9) to branch of tee (11).

(12) Attach hose (9) to adaptor (10) attached to solenoid valve input port.

(13) Attach hose (7) to elbow (8) on hydraulic control valve accumulator line.

(14) Attach fluid dampener (4) to tee (5) on the hydraulic control valve cylinder port.

(15) Attach hose (1) to adaptor (2) on the hydraulic control valve (3) to solenoid valve line.

4.22 REPLACE HYDRAULIC PRESSURE GAGE

a. This task covers: Removal and Replacement of Hydraulic Pressure Gage

b. Initial Setup

- **Tools**
  - General Mechanic's Tool Kit (Army NSN 5180-00-177-7033, Marine
  - Corps NSN 5180-00-606-3566)
- **Materials/Parts**
  - Anti-seize tape (NSN 8030-00-889-3534)
  - Industrial goggles (NSN 4240-00-052-3776)
  - Laboratory apron (NSN 8415-00-634-5023)
  - Plastic gloves (NSN 8030-00-763-4841)
  - Wiping rags (NSN 7920-00-205-1711)
- **Equipment Conditions**
  - Hydraulic cover weldment removed (para 4.17)
  - Launcher on flat ground or secured to trailer
- **General Safety Instructions**
  - Minimize contact of skin with hydraulic fluid or wear gloves.
- **Reference**
  - Pressure Check-out (para 2.6.1)

WARNING

TO AVOID EYE INJURY, WEAR SAFETY GOGGLES WHEN WORKING WITH HYDRAULIC FLUID.

c. Removal of Pressure Gage for MOD 0 and MOD 1 Launchers

(1) Remove three countersink screws (1)(see Figure 4.41) and three 5/16- inch nuts (2).

(2) Unscrew B-nut (3) at street elbow (4) using a 9/16-inch combination box/open-end wrench.

(3) Remove gage (5).

(4) Remove street elbow (4) from gage fitting (6) with two 9/16-inch combination box/open-end wrenches.

(5) Remove gasket (7) from gage and retain for reuse.

(6) Dispose of gage (5).

d. Replacement of Pressure Gage for MOD 0 and MOD 1 Launchers

(1) Install gasket (7) onto new gage (5).

(2) Wrap street elbow (4) threads with anti-seize tape.

(3) Using two 9/16-inch combination box/open-end wrenches, tighten street elbow (4) to gage fitting (6).

(4) Reconnect pressure gage (5) following para 4.17d (2)(d). Screw B-nut (3) onto street elbow (4) using 9/16-inch wrench.

(5) Install three countersunk screws (1) and three 5/16-inch nuts (2).

(6) Bleed hydraulic system (para 4.9).

(7) Check lines and fittings for leaks.

Legend:
(1) 5/16-inch screw (3)
(2) 5/16 Nuts (3)
(3) B-Nut
(4) Elbow
(5) Gage
(6) Fitting
(7) Gasket

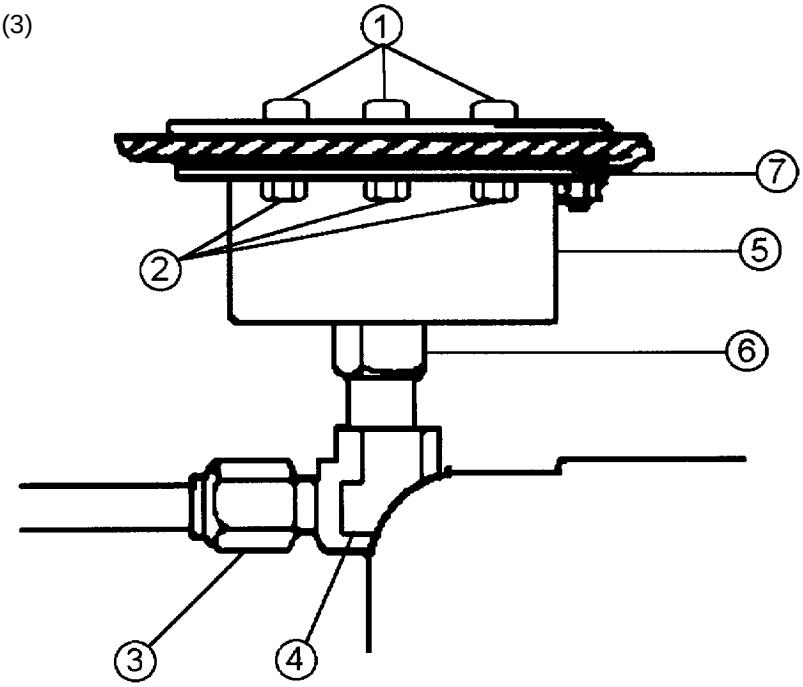

Figure 4.41. Removal and Installation of Pressure Gage for MOD 0 and MOD 1 Launchers

e. Removal of Pressure Gage for MOD 2 and MOD 3 Launchers

(1) Remove three countersunk screws (1) and three 5/1 6-inch nuts (2) (see Figure 4.42).

(2) Remove gage fitting (3) from adapter union (4).

(3) Remove gage (5).

(4) Remove gasket (6) from gage and retain for use.

(5) Dispose of gage.

f. Replacement of Pressure Gage for MOD 2 and MOD 3 Launchers

(1) Screw gage fitting (3) onto adapter union (4).

(2) Install gage (5) onto gage fitting (3).

(3) Install gasket (6)(see Figure 4.45) onto new gage (5).

(4) Install three countersunk screws (1) and three 5/16-inch nuts (2).

(5) Bleed hydraulic system (para 4.9).

(6) Check lines and fittings for leaks.

Legend:

(1) 5/16-inch screws (3)
(2) 5/16 Nuts (3)
(3) Gage Fitting
(4) Adaptor, Union
(5) Gage
(6) Gasket

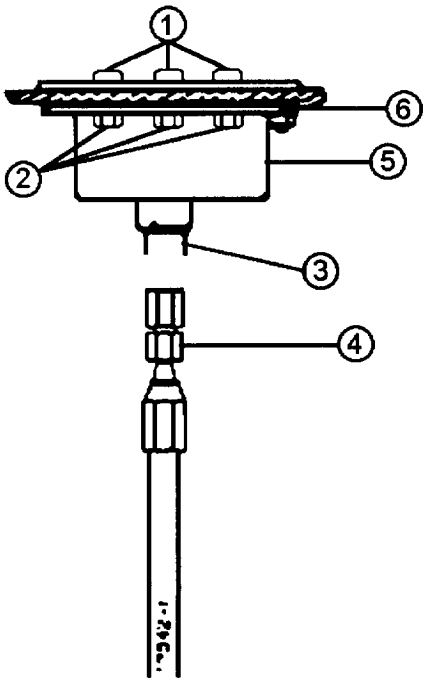

Figure 4.42. Removal and Installation of Pressure Gage for MOD 2 and MOD 3 Launchers

4.23 REPLACE HYDRAULIC CHECK VALVE

a. This task covers: Removal and Replacement of Hydraulic Check Valve

b. Initial Setup

- **Tools**
  - General Mechanic's Tool Kit (Army NSN 5180-00-177-7033, Marine Corps NSN 5180-00-606-3566)
- **Materials/Parts**
  - Anti-see tape (NSN 8030-00-889-3534)
  - Industrial goggles (NSN 4240-00-052-3776)
  - Laboratory apron (NSN 8415-00-634-5023)
  - Plastic gloves (NSN 8030-00-763-4841)
  - Wiping rags (NSN 7920-00-205-1711)

- **Equipment Conditions**
  - Hydraulic cover weldment removed (para 4.17)
  - Launcher on flat ground or secured to trailer
  - Relieve hydraulic pressure (para 4.17)
- **General Safety Instructions**
  - Minimize contact of skin with hydraulic fluid or wear gloves.
- **References**
  - Pressure Check-out (para 2.6.1)

WARNING

- **TO AVOID EYE INJURY, WEAR SAFETY GOGGLES WHEN WORKING WITH HYDRAULIC FLUID.**
- **WEAR PLASTIC GLOVES AND LABORATORY APRON TO AVOID INJURY TO PERSONNEL.**

c. Removal of Hydraulic Check Valve

(1) Using two 5/8-inch wrenches, unscrew B-nut (1) (see Figure 4.43).

(2) Using 5/8 and 15/16-inch combination box/open-end wrenches, unscrew check valve (2) from port (3) on hydraulic control valve (4).

(3) Remove check valve (2) from hydraulic control valve (4) and discard.

d. Replacement of Hydraulic Check Valve

(1) Wrap threads on each end of new check valve (2)(see Figure 4.43) with anti-seize tape.

(2) Install new check valve (2) into port (3) with arrow pointing toward valve and tighten using 3/4 and 5/8-inch wrenches.

(3) Install B-nut (1) onto check valve (2) using two 5/8-inch wrenches.

Legend:

(1) B-Nut
(2) Check Valve
(3) Valve Adaptor, Bottom Port
(4) Control Valve

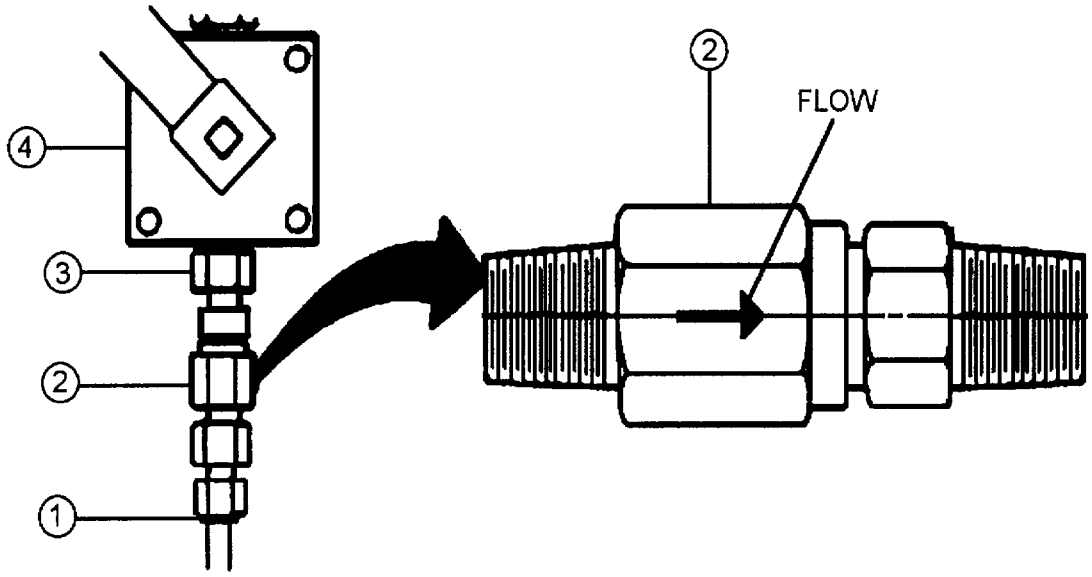

Figure 4.43. Removal and Replacement of Hydraulic Check Valve

(4) Bleed hydraulic system (para 4.9).

(5) Temporarily install pump handle to perform pressure check-out (para 2.6.1).

(6) Check for leaks in hydraulic lines and fittings.

(7) Install hydraulic cover weldment (para 4.17).

4.24 REPLACE FLUID DAMPENER

a. <u>This task covers: Removal and Replacement of Fluid Dampener</u>

b. <u>Initial Setup</u>

- **Tools**
  - General Mechanic's Tool Kit (Army NSN 5180-00-177-7033, Marine Corps NSN 5180-00-606-3566)

- **Materials/Parts**

  - Anti-seize tape (NSN 8030-00-889-3534)
  - Hydraulic fluid (NSN 9150-00-935-9807/9808)
  - Industrial goggles (NSN 4240-00-052-3776)
  - Laboratory apron (NSN 8415-00-634-5023)
  - Plastic gloves (NSN 8030-00-763-4841)
  - Wiping rags (NSN 7920-00-205-1711)

- **Equipment Conditions**

  - Launcher secured to trailer or rear of launcher raised above the ground.
  - Hydraulic pressure relieved and hydraulic hose removed (para 4.17).

· **General Safety Instructions**

  - Minimize contact of skin with hydraulic fluid or wear gloves.

· **Reference**

  - Pressure check-out (para 2.6.1)
  - Bleed Hydraulic System (para 4.9)

NOTE

FLUID DAMPENER CAN BE REMOVED WITHOUT REMOVING COVER FROM HYDRAULIC ASSEMBLY (PARA 4-17). BUT IT MAY BE EASIER FOR MANY MECHANICS TO REMOVE THE COVER.

WARNING

· **TO AVOID EYE INJURY, WEAR SAFETY GOGGLES WHEN WORKING WITH HYDRAULIC FLUID.**

· **WEAR PLASTIC GLOVES AND LABORATORY APRON WHEN WORKING WITH HYDRAULIC FLUID TO AVOID PERSONNEL INJURY.**

c. Removal of Fluid Dampener for MOD 0 and MOD 1 Launchers

(1) Disconnect fluid dampener (1) (see Figure 4.44) with hose (2) from elbow (3) using 7/8-inch wrench.

(2) Disconnect hose (2) from fluid dampener (1) using one 7/8-inch and one 11/16-inch wrenches.

(3) Dispose of fluid dampener (1).

d. Replacement of Fluid Dampener for MOD 0 and MOD 1 Launchers

(1) Wrap threads on hose (2) (see Figure 4.44) and new fluid dampener (1) with anti-seize tape.

(2) Reconnect hose (2) to fluid dampener (1) using two 7/8-inch wrenches.

(3) Reconnect fluid dampener (1) with hose (2) to elbow (3) using 7/8 and 11/16-inch wrenches.

(4) Reconnect hydraulic hose (2) to cylinder.

(5) Temporarily install pump handle to perform pressure check-out (para 2.6.1).

(6) Bleed hydraulic system (para 4.9).

(7) Check for leaks in hydraulic lines and fittings.

(8) Reinstall hydraulic cover weldment (para 4.17), if it was removed.

Legend:

(1) Fluid Dampener
(2) Hose
(3) Elbow
(4) Valve Adaptor, Top Port

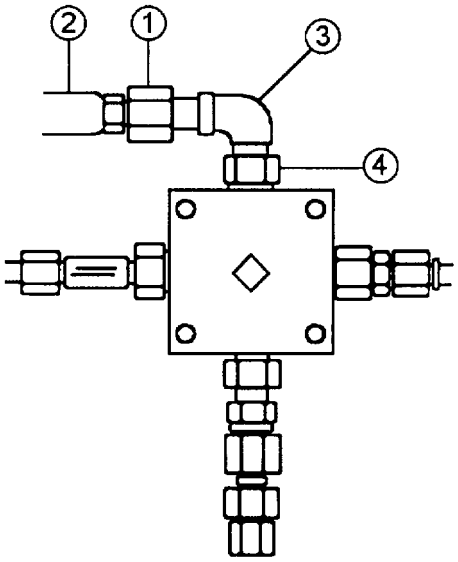

Figure 4.44. Removal and Replacement of Fluid Dampener for MOD 0 and MOD 1 Launchers

e. Removal of Fluid Dampener for MOD 2 and MOD 3 Launchers

(1) Disconnect fluid dampener (1) (see Figure 4.48) with hose (2) from tee (3).

(2) Disconnect hose (2) from fluid dampener (1)

(3) Dispose of fluid dampener (1).

f. Replacement of Fluid Dampener for MOD 2 and MOD 3 Launchers

(1) Wrap threads on hose (2)(see Figure 4.45) and new fluid dampener (1) with anti-seize tape.

(2) Reconnect hose (2) to fluid dampener (1).

(3) Reconnect fluid dampener (1) with hose (2) to tee (3).

(4) Temporarily install pump handle to perform pressure check-out (para 2.6.1).

(5) Bleed hydraulic system (para 4.9).

(6) Check for leaks in hydraulic lines and fittings.

(7) Reinstall hydraulic cover weldment (para 4.17), if it was removed.

Legend:

(1) Fluid Dampener
(2) Hose
(3) Tee
(4) Cylinder

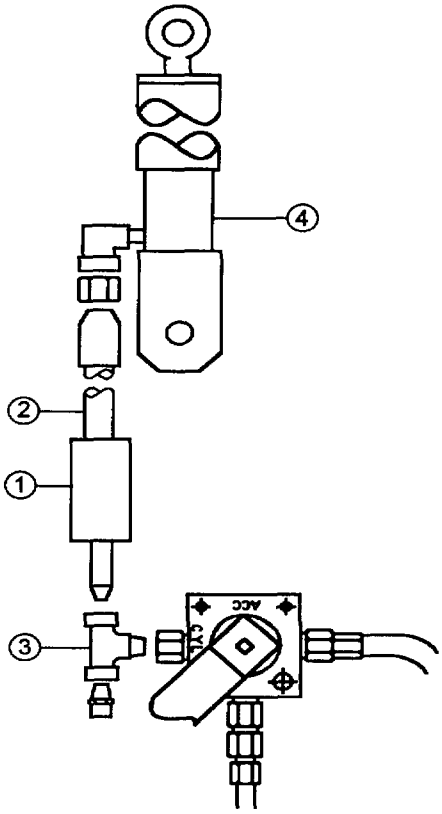

Figure 4.45. Removal and Replacement of Fluid Dampener for MOD 2 and MOD 3 Launchers

4.25 REPAIR HYDRAULIC HOSE, LINES, AND FITTINGS

a. This task covers: Remove, Inspect, and Replace Hoses. Lines and Fittings

b. Initial Setup

- **Tools**
  - Adjustable wrench (NSN 5120-00-423-6728)
  - General Mechanic's Tool Kit (Army NSN 5180-00-177-7033, Marine Corps NSN 5180-00-606-3566)
- **Materials/Parts**
  - Anti-seize tape (NSN 8030-00-889-3534)
  - Cylinder hose (P/N 82A5052A0506)
  - Hydraulic fluid (NSN 9150-00-935-9807/9808)
  - Industrial goggles (NSN 4240-00-052-3776)
  - Laboratory apron (NSN 8415-00-634-5023)
  - Plastic gloves (NSN 8030-00-763-4841)
- **Equipment Conditions**
  - Launcher on ground or secured to trailer
  - Relieve hydraulic pressure, hydraulic cover removed, and hydraulic hose removed (para 4.17)
- **General Safety Instructions**
  - Minimize contact of skin with hydraulic fluid or wear gloves.
- **Reference**
  - Bleed Hydraulic System (para 4.9)

WARNING

TO AVOID EYE INJURY, WEAR SAFETY GOGGLES WHEN WORKING WITH HYDRAULIC FLUID.

c. Removal of Hydraulic Hoses. Lines and Fittings for MOD 0 and MOD 1 Launchers

(1) Move hydraulic pump valve lever to RELEASE position (see Figure 4.46).

(2) Place a drip pan below hydraulic assembly to catch hydraulic fluid spills.

(3) Loosen B-nut (1) from 90° street elbow (2) with 9/16-inch combination box/open-end wrench.

CAUTION

WHEN REMOVING ELBOW AT GATE VALVE, CARE MUST BE TAKEN NOT TO TWIST GATE VALVE AND IN THE PROCESS LOOSEN THE SEAL AT THE ACCUMULATOR.

(4) Loosen 90° street elbow (2) from sleeve (3) using 9/16-inch and 1-1/16-inch or adjustable wrench and remove.

(5) Loosen B-nut (4) with two 9/16-inch wrenches and withdraw line (5).

(6) Loosen B-nut (6) with two 9/16-inch combination box/open-end wrenches and withdraw pressure gage.

(7) Loosen B-nut (7) from male-run tee (8) with 9/16-inch combination box/open-end wrench and withdraw line (9).

Legend:

(1) B-Nut
(2) Street Elbow
(3) Sleeve
(4) B-Nut
(5) Line
(6) B-Nut
(7) B-Nut
(8) Tee, Male-Run
(9) Line
(10) Valve Adaptor, Left Port

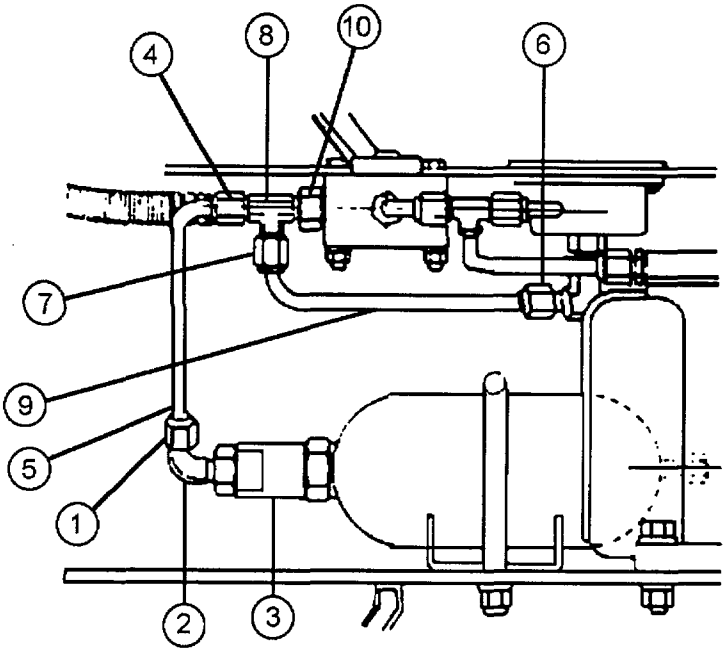

Figure 4.46. Remove, Inspect, and Replace Hydraulic Hoses, Lines, and Fittings for MOD 0 and MOD 1 Launchers (Rear View)

(8) Loosen male-run tee (8) from port valve adaptor left fitting (10) with 9/16-inch and 15/16-inch combination box/open-end wrenches.

(9) Remove male-run tee (8).

NOTE

CARE MUST BE USED IN REMOVING UNION TEE TO AVOID DISTORTING LINES.

(10) Loosen B-nuts (11), (12), and (13) (see Figure 4.47) from union tee (14) using two 9/16-inch combination box/open-end wrenches.

(11) Remove union tee (14).

(12) Loosen check valve (15) from port valve adaptor bottom (16) and straight adaptor (17) with 5/8- and 15/16-inch combination box/open-end wrenches and withdraw line (18) with check valve (15) attached.

(13) Loosen B-nut (19) at hand pump with two 9/16-inch wrenches and withdraw line (20).

(14) Remove hydraulic hose (21) from fluid dampener (22) using 7/8 and 11/16-inch wrench.

(15) Remove fluid dampener (22) from street elbow (23) using 3/4 and 7/8-inch wrenches.

(16) Remove street elbow (23) from port valve adaptor top (24) using 3/4 and 15/16-inch combination box/open-end wrenches.

(17) Loosen B-nut (25) with two 9/16-inch combination box/open-end wrenches and withdraw line (26) from male connector (27).

(18) Remove male connector (27) from port valve adaptor right (28) using 9/16 and 15/16 inch wrenches.

d. Inspect Hydraulic Hoses, Lines and Fittings for MOD 0 and MOD 1 Launchers

(1) Carefully check all hydraulic lines for cracks and leaks.

(2) If lines are damaged, turn in through maintenance channels for remanufacture.

(3) Check all fittings for stripped threads and cracks and replace as needed.

(4) Check fluid dampener (22) visually to ensure opening is not blocked. Clean or replace as needed.

e. Replace Hydraulic Hoses, Lines and Fittings for MOD 0 and MOD 1 Launchers

(1) Wrap all exposed threads with anti-seize tape before installation. Install male connector (27) into port valve adaptor right (28) using 9/16-inch wrench.

(2) Place line (26) onto male connector (27) and tighten B-nut (25) using two 9/16-inch combination box/open-end wrenches.

(3) Attach check valve (15) into port valve adaptor bottom (16) and attach line (18) to check valve (15).

(4) Install union tee (14) into B-nuts (11) and (12) using two 9/16-inch combination box/open-end wrenches.

(5) Install line (20) into union tee (14) and tighten B-nut (13) using 9/16-inch wrench.

(6) Align line (20) with pump fitting and tighten B-nut (19) using 9/1 6-inch combination box/open-end wrench.

(7) Thread street elbow (23) into port valve adaptor top (24) and tighten using 3/4 and 15/16-inch wrenches.

(8) Attach fluid dampener (22) to street elbow (23) and tighten using a 7/8-inch combination box/open-end wrench.

Legend:

(11) B-Nut
(12) B-Nut
(13) B-Nut
(14) Union Tee
(15) Check Valve
(16) Valve Adaptor Bottom Port
(17) Straight Adaptor
(18) Line
(19) B-Nut
(20) Line
(21) Hose
(22) Fluid Dampener
(23) Street Elbow
(24) Valve Adaptor Top Port
(25) B-Nut
(26) Line
(27) Connector, Male
(28) Valve Adaptor Right Port

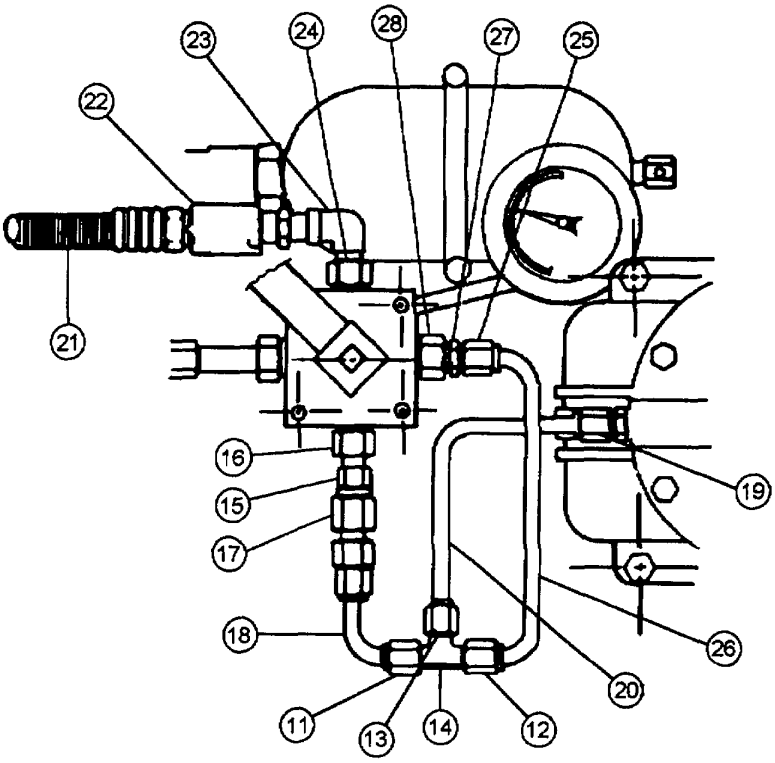

Figure 4.47. Remove, Inspect and Replace Hydraulic Hose, Lines, and Fittings for MOD 0 and MOD 1 Launchers (Top View)

NOTE

FOR STEPS (9) THROUGH (14), REFER TO FIGURE 4.46

(9) Install male-run tee (8) (see Figure 4.46) into port valve adaptor left (10) and tighten using 9/16 and 15/16-inch combination box/open-end wrenches.

(10) Install line (9) and tighten B-nut (6) into gage fitting using two 9/16-inch combination box/open-end wrenches.

(11) Install line (9) with pressure gage into male-run tee (8) by tightening, B-nut (7) using 9/16-inch combination box/open-end wrench.

(12) Install line (5) into male-run tee (8) by tightening B-nut (4) using two 9/16-inch wrenches.

(13) Install male elbow (2) into sleeve (3) using 9/16-inch combination box/open-end wrench.

(14) Install line (5) onto male elbow (2) and tighten B-nut (1) using 9/16-inch combination box/open-end wrench.

(15) Install hydraulic hose (21) (see Figure 4.47) into fluid dampener (22).

(16) Reconnect hydraulic hose (21) to cylinder.

NOTE

FOLLOW-ON PROCEDURE: BLEED HYDRAULIC SYSTEM (PARA 4.9).

(17) Perform pressure check-out (para 2.6.1).

(18) Check for leaks in hydraulic lines and fittings.

(19) Install hydraulic cover weldment (para 4.17).

f. Remove Hoses. Lines and Fittings for MOD 2 and MOD 3 Launchers

(1) Move hydraulic pump valve lever to RELEASE position.

(2) Place a drip pan below hydraulic assembly to catch hydraulic fluid spills.

Legend:

(1) Adaptor
(2) Sleeve
(3) Union Pipe
(4) Hose, 2042-1
(5) Tee
(6) Hose, 2032
(7) Elbow
(8) Elbow
(9) Adaptor
(10) Hose, 2042-2
(11) Tee
(12) Valve Adaptor, Left Port
(13) Hose, 2033
(14) Elbow
(15) Adaptor
(16) Hose, 2042-3
(17) Elbow
(18) Adaptor
(19) Tee
(20) B-Nut
(21) B-Nut
(22) Line
(23) Check Valve
(24) Valve Adaptor, Bottom Port
(25) Adaptor
(26) Hose
(27) Adaptor
(28) Fluid, Dampener
(29) Tee
(30) Top Valve Adaptor, Top Port
(31) B-Nut
(32) Line
(33) Connector, Male
(34) Right Valve Adaptor, Right Port

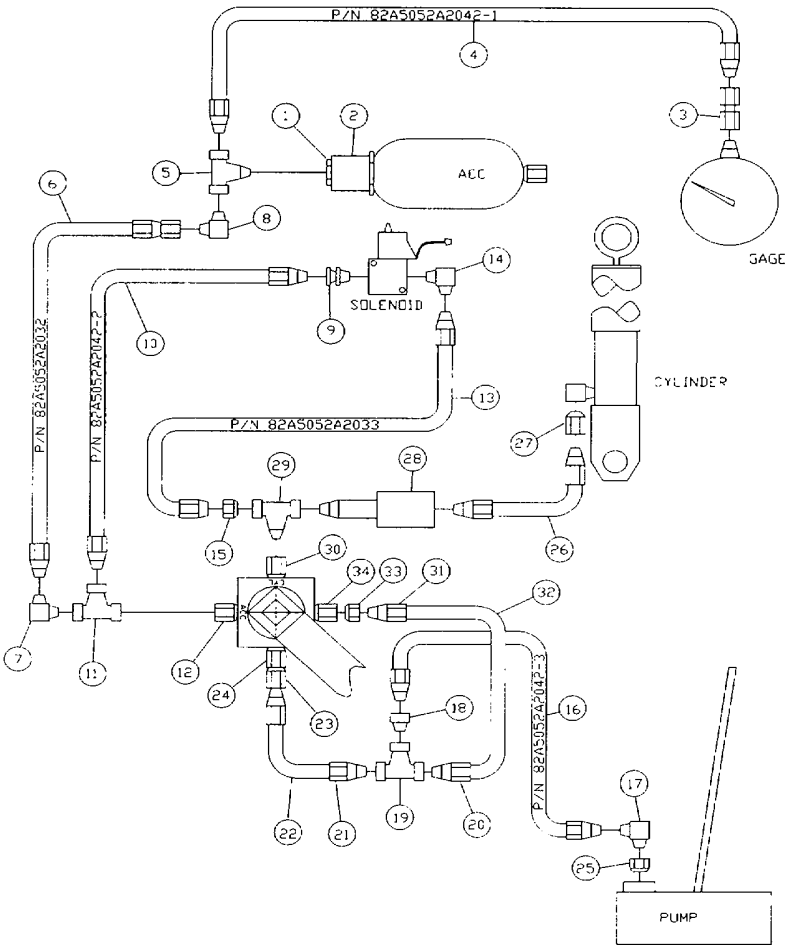

Figure 4.48. Remove and Inspect Hoses, Lines, and Fittings for MOD 2 and MOD 3 Launchers

(3) Remove adaptor (1) (see Figure 4.48) from sleeve (2).

(4) Loosen union pipe (3) from gage.

(5) Loosen hose (4) (P/N 82A5052A2042-1) from tee (5) and remove hose.

(6) Remove hose (6) (P/N 82A5052A2032) from elbow (7) and elbow (8).

(7) Loosen adaptor (9) from hose (10)(P/N 82A5052A2042-2).

(8) Remove hose (10) from tee (11).

(9) Remove tee (11) from port valve adaptor left (12).

(10) Loosen hose (13)(P/N 82A5052A2033) from elbow (14).

(11) Remove hose (13) from adaptor (15).

(12) Loosen hose (16) (P/N 82A5052A2042-3) from elbow (17).

(13) Remove hose (16) from adaptor (18).

CAUTION

CARE MUST BE USED IN REMOVING UNION TEE (19) TO AVOID DISTORTING LINES.

(14) Loosen B-nuts (20) and (21) from union tee (19) using two 9/16-inch combination box/open-end wrenches.

(15) Remove union tee (19).

(16) Loosen check valve (23) from port valve adaptor bottom (24) with 5/8 and 15/16-inch combination box/open end wrenches and withdraw line (22) with check valve (23) attached.

(17) Remove elbow (17) and adaptor (25) from hand pump.

(18) Remove hydraulic hose (26) from adaptor (27).

(19) Remove fluid dampener (28) from hose (26).

(20) Remove fluid dampener (28) from tee (29).

(21) Remove tee (29) from port valve adaptor top (30).

(22) Loosen B-nut (31) with two 9/16-inch combination box/open-end wrenches and withdraw line (32) from male connector (33).

(23) Remove male connector (33) from port valve adaptor right (34) using 9/16 and 15/16-inch wrenches.

g. Inspect Hoses, Lines and Fittings for MOD 2 and MOD 3 Launchers

(1) Carefully check all hydraulic lines and hoses for cracks and leaks.

(2) If lines or hoses are damaged, replace.

(3) Check all fittings for stripped threads and cracks and replace as needed.

(4) Check fluid dampener (28) visually to ensure that opening is not blocked. Clean or replace as needed.

h. Replace Hoses. Lines and Fittings for MOD 2 and MOD 3 Launchers

(1) Wrap all exposed threads with anti-seize tape before installation. Install male connector (33) (see Figure 4.49) into port valve adaptor right (34) using 9/16-inch wrench.

(2) Place line (32) onto male connector (33) and tighten B-nut (31) using two 9/16-inch combination box/open-end wrenches.

(3) Install tee (29) to port valve adaptor left (12).

(4) Attach fluid dampener (28) to tee (29).

(5) Attach fluid dampener (28) to hose (26).

(6) Attach hydraulic hose (26) to adaptor (27).

(7) Install elbow (17) and adaptor (25) on hand pump.

(8) Attach check valve (23), with line (22) attached, to port valve adaptor bottom (24) with 5/8-inch and 5/16-inch box/open-end wrenches.

(9) Install union tee (19) into B-nuts (20) and (21) using two 9/16-inch combination box/open-end wrenches.

(10) Install hose (16) to adaptor (18).

(11) Install hose (16) to elbow (17).

(12) Install hose (13) onto adaptor (15).

(13) Install hose (13) to elbow (14).

(14) Install hose (10) onto tee (11).

Legend:

(1) Adaptor
(2) Sleeve
(3) Union Pipe
(4) Hose, 2042-1
(5) Tee
(6) Hose, 2032
(7) Elbow
(8) Elbow
(9) Adaptor
(10) Hose, 2042-2
(11) Tee
(12) Valve Adaptor, Left Port
(13) Hose, 2033
(14) Elbow
(15) Adaptor
(16) Hose, 2042-3
(17) Elbow
(18) Adaptor
(19) Tee
(20) B-Nut
(21) B-Nut
(22) Line
(23) Check Valve
(24) Valve Adaptor, Bottom Port
(25) Adaptor
(26) Hose
(27) Adaptor
(28) Fluid, Dampener
(29) Tee
(30) Top Valve Adaptor, Top Port
(31) B-Nut
(32) Line
(33) Connector, Male
(34) Right Valve Adaptor, Right Port

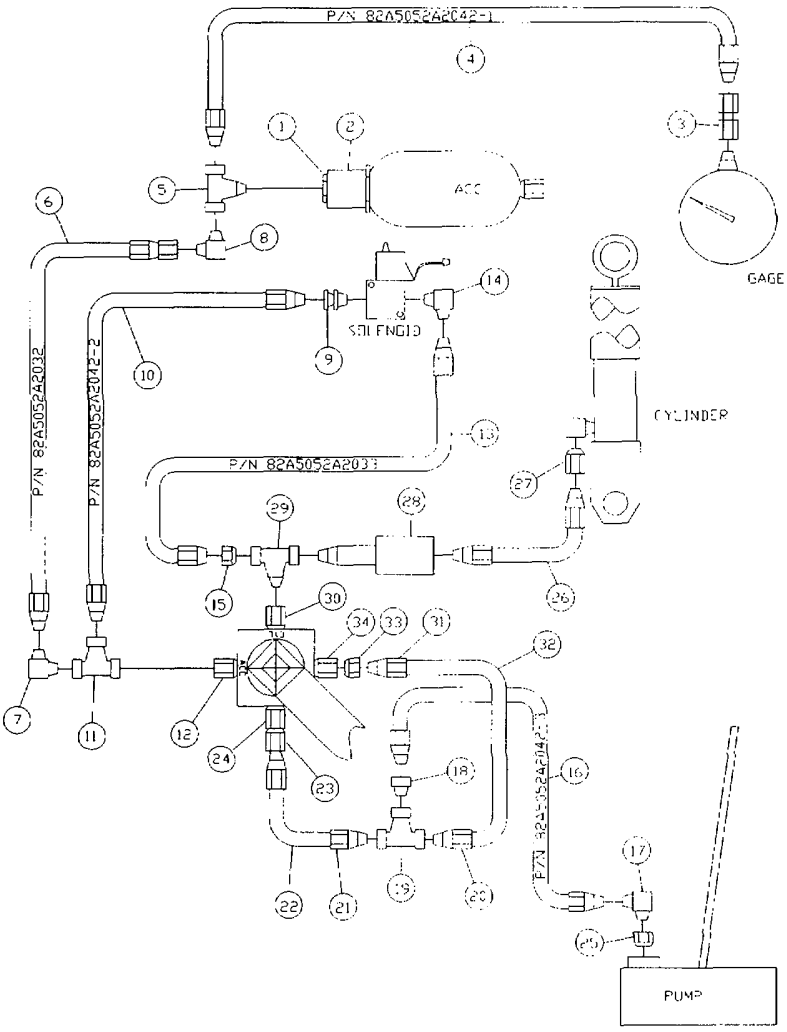

Figure 4.49. Replace Hoses, Lines and Fittings for MOD 2 and MOD 3 Launchers

(15) Install adaptor (9) onto hose (10).

(16) Install hose (6) onto elbow (7) and elbow (8).

(17) Attach hose (4) to tee (5).

(18) Attach union pipe (3) to gage.

NOTE

FOLLOW-ON PROCEDURE: BLEED HYDRAULIC SYSTEM (PARA 4.9).

(19) Attach adaptor (1) to sleeve (2).

(20) Perform pressure check-out (para 2.6.1).

(21) Check for leaks in hydraulic lines and fittings.

(22) Install hydraulic cover weldment (para 4.17).

4.26 REPLACE LANYARD

a. This task covers: Remove and Replace Lanyard

b. Initial Setup

· **Tools**

- General Mechanic's Tool Kit (Army NSN 5180-00-177-7033, Marine Corps NSN 5180-00-606-3566)

· **Equipment Conditions**

- Launcher on ground or secured to trailer

c. Remove Lanyard

(1) Using 5/32-inch hex key and 7/16-inch combination box/open-end wrench, remove hex-head capscrew (1) (see Figure 4.50) two flatwashers (2), lockwasher (3), and hex nut (4) attaching lanyard (5) to hydraulic control valve lever (6).

(2) Remove lanyard (5) from the guides on the bottom of the launcher.

(3) Retain parts from old lanyard.

d. Replace Lanyard

(1) Assemble new lanyard from old hardware and with 36 feet of new wire rope and crimping ferrules.

(2) Thread new lanyard through launcher guides from front to rear (handle will remain at front of launcher).

(3) Align lanyard eye over hole in hydraulic control valve lever (6).

(4) Install two flatwashers (2), hex-head capscrew (1), lockwasher (3), and hex nut (4).

(5) Tighten hex-head capscrew (1) and hex nut (4) using 5/32-inch hex key and 7/16-inch combination box/open-end wrench.

Legend:

(1) Capscrew
(2) Flatwashers
(3) Lockwasher
(4) Hex Nut
(5) Lanyard
(6) Valve Lever

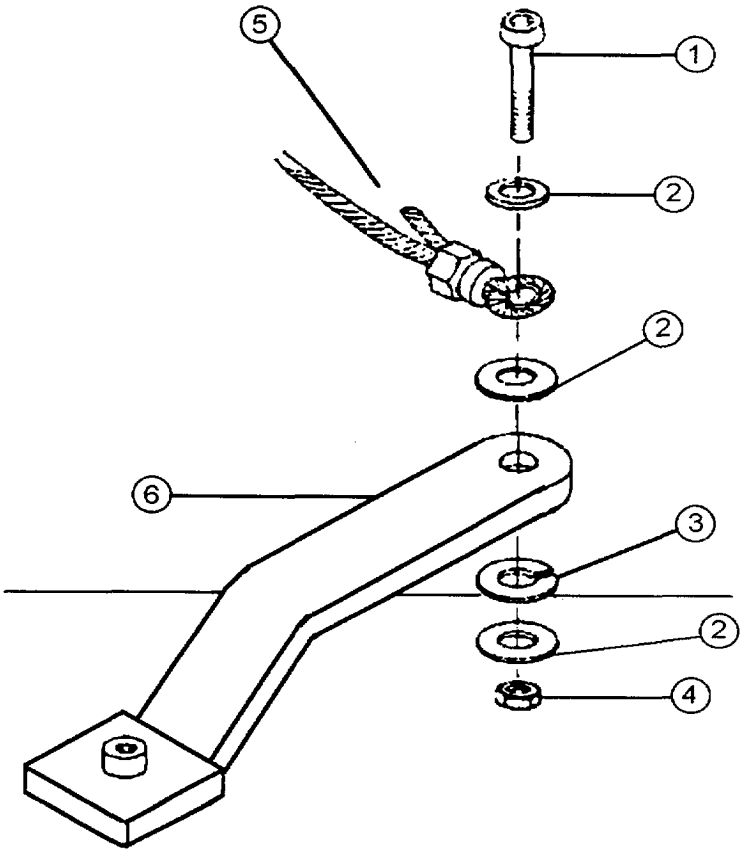

Figure 4.50. Remove and Replace Lanyard

4.27 REPLACE HYDRAULIC SOLENOID VALVE (MOD 2 AND MOD 3)

a. This task covers: Remove and Replace Hydraulic Solenoid Valve

b. Initial Setup

· **Tools**

- Adjustable wrench (NSN 5120-00-423-6728)
- General Mechanic's Tool Kit (Army NSN 5180-00-177-7033, Marine Corps NSN 5180-00-606-3566)

· **Materials/Parts**

- Anti-seize tape (NSN 8030-00-889-3534)
- Hydraulic fluid (NSN 9150-00-935-9807/9808)
- Industrial goggles (NSN 4240-00-052-3776)
- Laboratory apron (NSN 8415-00-634-5023)
- Plastic gloves (NSN 8030-00-763-4841)
- Wiping rags (NSN 7920-00-205-1711)

· **Equipment Conditions**

- Pressure Check-out (para 2.6.1)
- Bleed Hydraulic System (para 4.9)

· **General Safety Instructions**

- Minimize contact of skin with hydraulic fluid or wear gloves.

WARNING

TO AVOID EYE INJURY, WEAR SAFETY GOGGLES WHEN WORKING WITH HYDRAULIC FLUID.

c. Removal of Hydraulic Solenoid Valve on MOD 2 or MOD 3 Launchers

(1) Detach solenoid valve connector mating bracket (1) (see Figure 4.51) from base plate by removing two screws (2), flatwashers (3), lockwashers (4), and nuts (5).

(2) Remove hose (6) from elbow (7) on the solenoid valve (8) output port.

(3) Remove hose (9) from swivel adaptor (10) on the solenoid valve (8) input port.

(4) Remove solenoid valve (8) by detaching valve (8) and valve mounting plate (21) from hydraulics cover (11) by removing two screws (12), flatwashers (13), lockwashers (14), and nuts (15).

(5) Remove swivel adaptor (10) from input port of solenoid valve (8).

(6) Remove elbow (7) from output port of solenoid valve (8).

(7) Detach solenoid valve connector mating bracket (1) from solenoid valve connector (16) by removing four screws (17), flatwashers (18), lockwashers (19), and nuts (20).

Legend:

(1) Bracket
(2) Screws
(3) Flatwashers
(4) Lockwashers
(5) Nuts
(6) Hose
(7) Elbow
(8) Solenoid Valve
(9) Hose
(10) Adaptor
(11) Cover
(12) Screws
(13) Flatwashers
(14) Lockwashers
(15) Nuts
(16) Solenoid Valve Connector
(17) Screws
(18) Flatwashers
(19) Lockwashers
(20) Nuts
(21) Solenoid Valve Mounting Plate

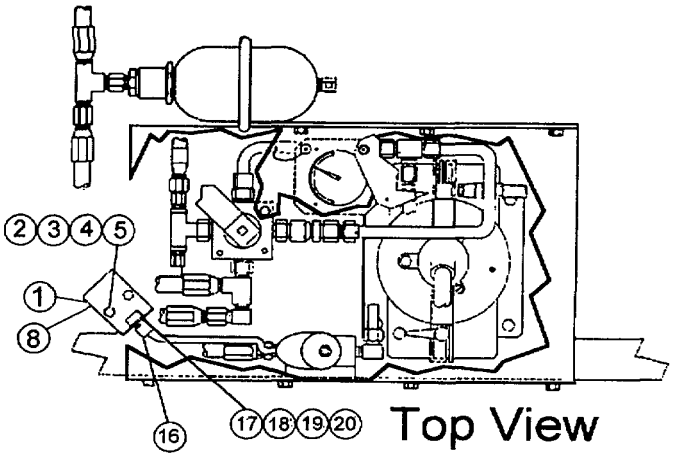

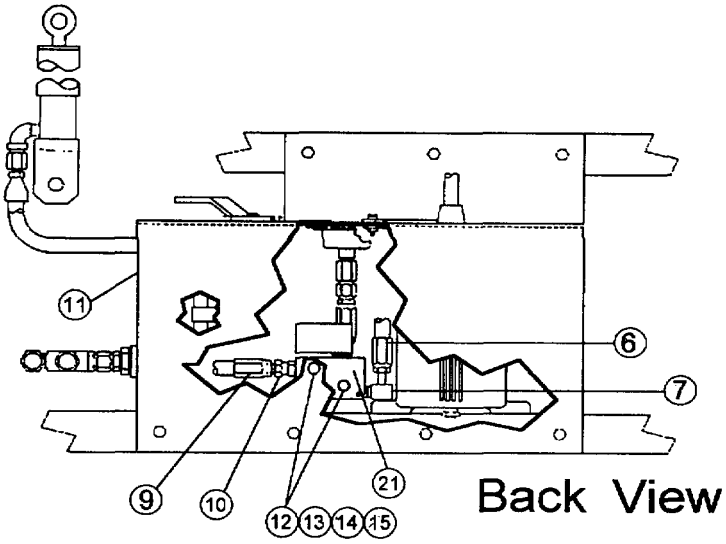

Figure 4.51. Remove and Replace Hydraulic Solenoid Valve for MOD 2 and MOD 3 Launchers

d. Replacement of Hydraulic Solenoid Valve on MOD 2 and MOD 3 Launchers

(1) Attach solenoid valve connector (16) (see Figure 4.51) to mating bracket (1) using four screws (17), washers (18), lockwashers (19), and nuts (20).

(2) Install elbow (7) in the output port of the solenoid valve (8).

(3) Install swivel adaptor (10) in the input port of the solenoid valve (8).

(4) Mount solenoid valve (8) and solenoid valve mounting plate (21) to hydraulics cover (11) by installing two screws (12), flatwashers (13), lockwashers (14), and nuts (15).

(5) Attach hose (9) to swivel adaptor (10) on the solenoid valve (8) input port.

(6) Attach hose (6) to elbow (7) on the solenoid valve (8) output port.

(7) Attach solenoid valve mating bracket (1) to base plate using two screws (2), flatwashers (3), lockwashers (4), and nuts (5).

4.28 MOD 2/3 LAUNCHERS REMOTE TRAILER QUICK DISCONNECT DEVICE

a. Initial Setup

· **Tools and Special Tools**

- General Mechanics Tool Kit (NSN 5180-00-177-7033)
- 3/16-inch hex wrench
- 1/4-inch hex wrench
- 7/16-inch box or open-end wrench
- 1/8-inch hex head wrench

· **Materials/Parts**

- Cotter pin MS24665-283
- Extended self-locking nut MS 21042L04
- Lockwasher MS35338-139
- Lockwasher MS35338-141
- Self-locking screw MS16997-80L

· **References**

- TM 9-1300-206
- TM 9-2330-205-14&P
- TM 9-2330-389-14&P

· **Equipment Conditions**

- Locking pin is in locked-jaws position.

b. Removal

(1) Disconnect multi-purpose cable (W5) from safety switch assembly connector and replace its protective cap.

(2) To remove clamp plate (1) (Figure 4.55), remove hexagon cap screws (2) and lockwasher (3) from clamp plate.

(3) To remove access cover (4), remove six self-locking screws and washers (4) using 1/4" hex head wrench.

Legend:

(1) Clamp Block
(2) Cap Screws
(3) Lockwashers
(4) Access Cover
(5) Hex Head Screws
(6) Support Block
(7) Lunette

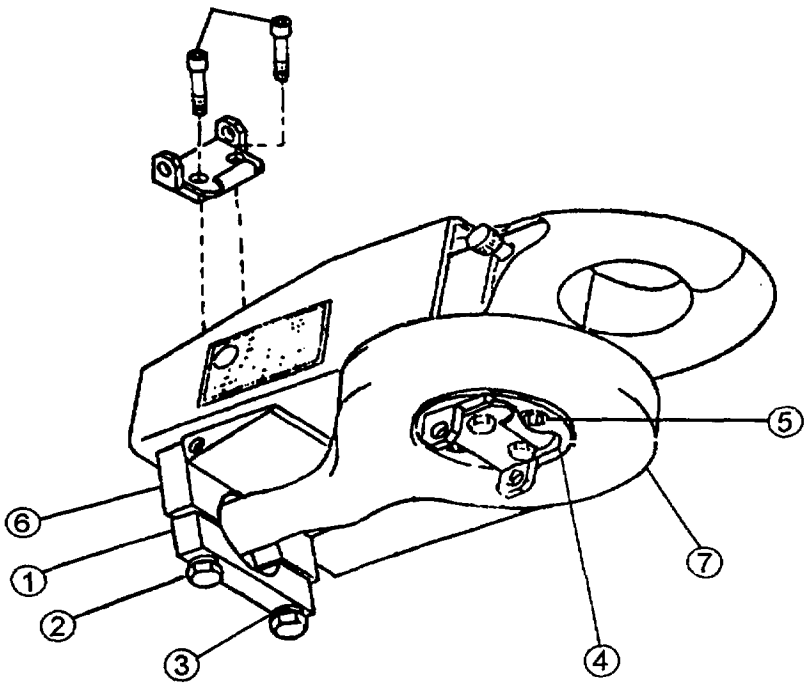

Figure 4.52. Quick Disconnect Device

c. Installation

(1) Remove six hex head screws (5) (Figure 4.52) from access cover (4) and separate cover from lower housing boss using 1/4-inch hex wrench.

(2) Remove two cap screws (2) and lockwashers (3) from clamp block (1) and separate clamp block from support block (6) using 7/16-inch box or open-end wrench.

(3) Position device on trailer lunette (4) with device jaws pointing to front of trailer. Hold the housing boss of the device up into the lunette ring (7) while locating the support bock (6) of the device up into the shaft of the lunette (7).

(4) Secure device to lunette ring using access cover (4) and six hex head screws (5).

(5) Secure device to lunette shaft using clamp block (1) and two cap screws (2) and lockwashers (3). Ensure bolts are tightened evenly.

Legend:

(1) Disconnect Device
(2) Hex Head Screws (6)
(3) Access Cover
(4) Cap Screws (2)
(5) Lockwashers (2)
(6) Clamping Block
(7) Support Block
(8) Trailer Lunette
(9) Cable Bracket
(10) Hex Head Screws (2)

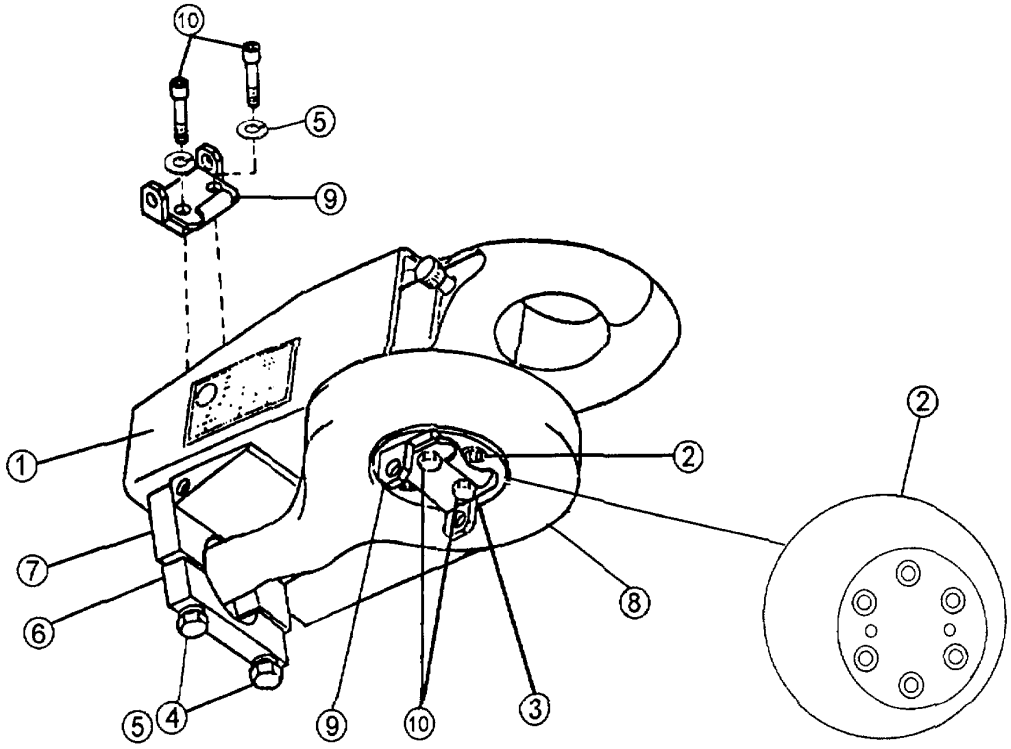

Figure 4.53. Remote Trailer Disconnect

NOTE

IT MAY BE NECESSARY TO INVERT TOWING LUNETTE OF TRAILER TO KEEP TRAILER LEVEL WHEN ATTACHING TRAILER TO SOME VEHICLES. DO NOT INVERT THE LUNETTE ON THE M353 TRAILER (MOD 2 LAUNCHER).

(6) To invert lunette (8) {see Figure 4.53), perform the following:

(a) Use 3/16-inch hex wrench to remove two hex head cap screws (10) and lockwashers (5) from cable bracket (9) on top of device and remove cable mounting bracket (9).

(b) Replace cap screws (4) and lockwashers (5) in disconnect device (1) housing.

(c) Invert lunette (8) (see Figure 4.54).

1 Use pliers to remove cotter pin (1) (Figure 4.57). Discard cotter pin.

2 Use 1 1/2 inch open wrench to loosen nut (2) and flatwasher (3) from trailer chassis (4).

3 Pull lunette (5) forward and rotate left or right to the lower position.

4 Tighten flatwasher (3) and nut (2) to trailer chassis (4). Use torque wrench to torque nut (2) to 400 to 450 ft-lbs.

5 Install new cotter pin (1).

Legend:

(1) Cotter Pin
(2) Nut
(3) Flatwasher
(4) Trailer Chassis
(5) Lunette

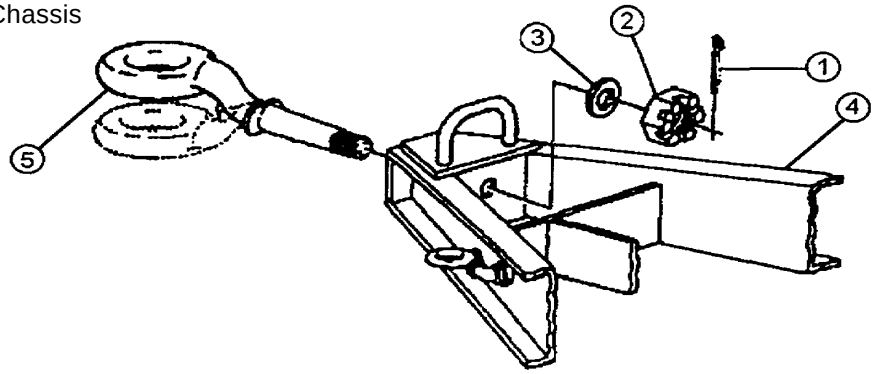

Figure 4.54. Inverting the Lunette

(d) Install disconnect device (1) (Figure 4.53) on trailer lunette (8).

(e) Using 7/16-inch wrench, remove two cap screws (2) and lockwashers (5) from clamp plate (3) and install and secure cable mounting bracket (9) on clamp plate (3).

NOTE

THIS OPERATION IS REQUIRED ONLY AFTER DISCONNECT DEVICE HAS BEEN ACTIVATED, JAWS OPENED.

(7) Loosen thumbscrews (1) on disconnect housing cover (2) (see Figure 4.55) and actuator housing cover (3) and lift covers.

(8) Disconnect moving-end of linear actuator (4) from actuator arm (5).

(9) Manually screw actuator (4) back to closed jaw position by screwing clockwise.

(10) Reconnect moving-end of actuator (4) to actuator arm (5).

(11) Ensure pin (6) on actuator arm (5) is straight up and down.

Legend:

(1) Thumbscrews
(2) Housing Cover
(3) Housing Cover, Actuator
(4) Linear Actuator
(5) Actuator Arm
(6) Actuator Pin

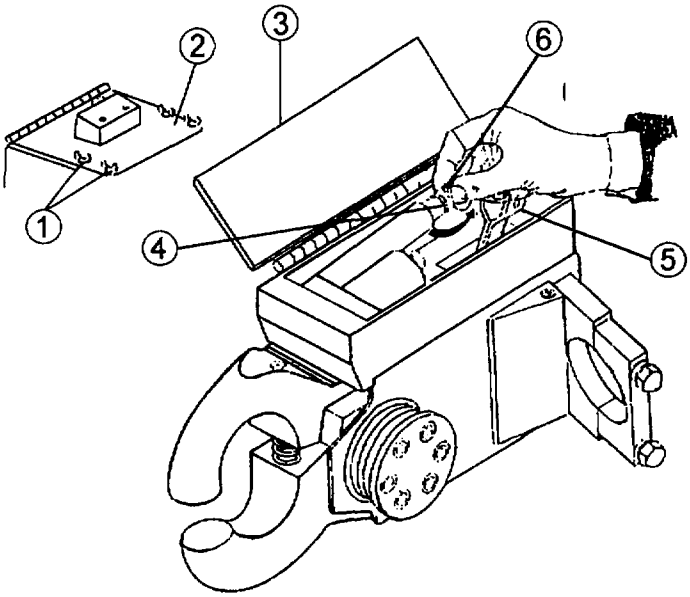

Figure 4.55. Reset Actuator of Disconnect Device

(12) Manually close-jaws (1)(see Figure 4.56) and hold closed. Roller carriage (2) will spring into closed-jaw position.

(13) Ensure roller carriage (2) is properly seated in closed-jaws position by manually pulling on roller carriage as shown. Ensure roller carriage (2) is lined up with or pulled past scribe lines on roller guide (3).

(14) Close disconnect housing cover and actuator housing cover and tighten thumbscrews.

Legend:

(1) Jaws
(2) Roller Carriage
(3) Roller Guide
(4) Scribe Line

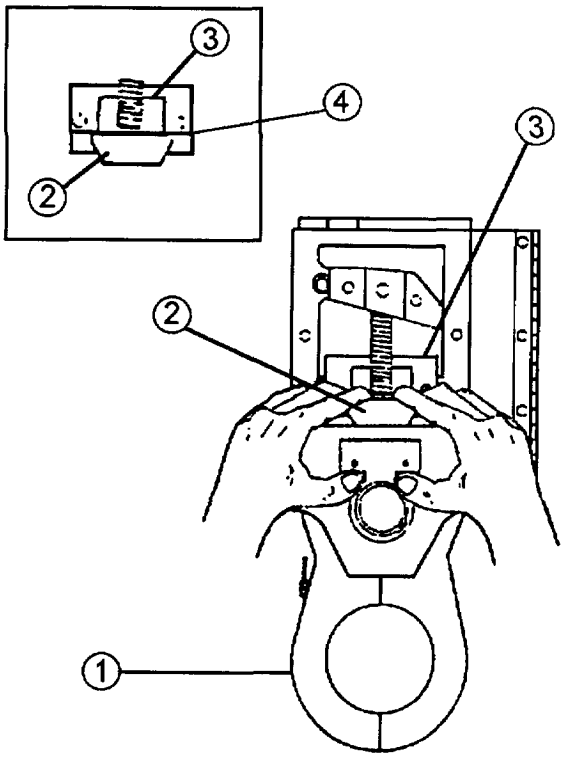

Figure 4.56. Close and Reset Jaws of Trailer Disconnect Device

(15) If required, remove locking pin (1) (see Figure 4.60) from storage position (2) and install in the trailer disconnect device's (3) locked-jaws position (4).

Legend:

(1) Locking Pin
(2) Storage Position
(3) Disconnect Device
(4) Locked Position

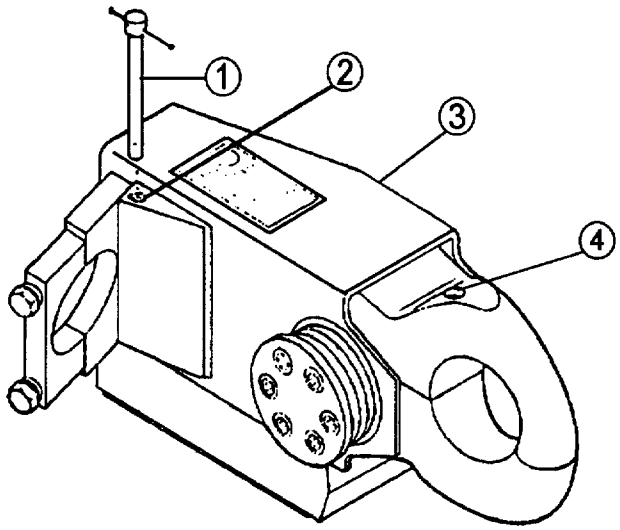

Figure 4.57. Trailer Disconnect Device Travel Lock

(16) Install branched Cable assembly W5.

(17) Remove ball-lock pin (1) (see Figure 4.57) from cable bracket assembly (2) located on W5 branched cable J1 connector (3).

(18) Insert cable bracket (2) into mounting bracket (4) and insert ball-lock pin (1).

(19) Remove connector cover from connector W5P2 (5).

Legend:

(1) Ball-lock Pin
(2) Cable Bracket
(3) J1 Connector
(4) Mounting Bracket
(5) W5P2 Connector
(6) Receptacle A4J1
(7) W5P1 Connector
(8) W5P3 Connector

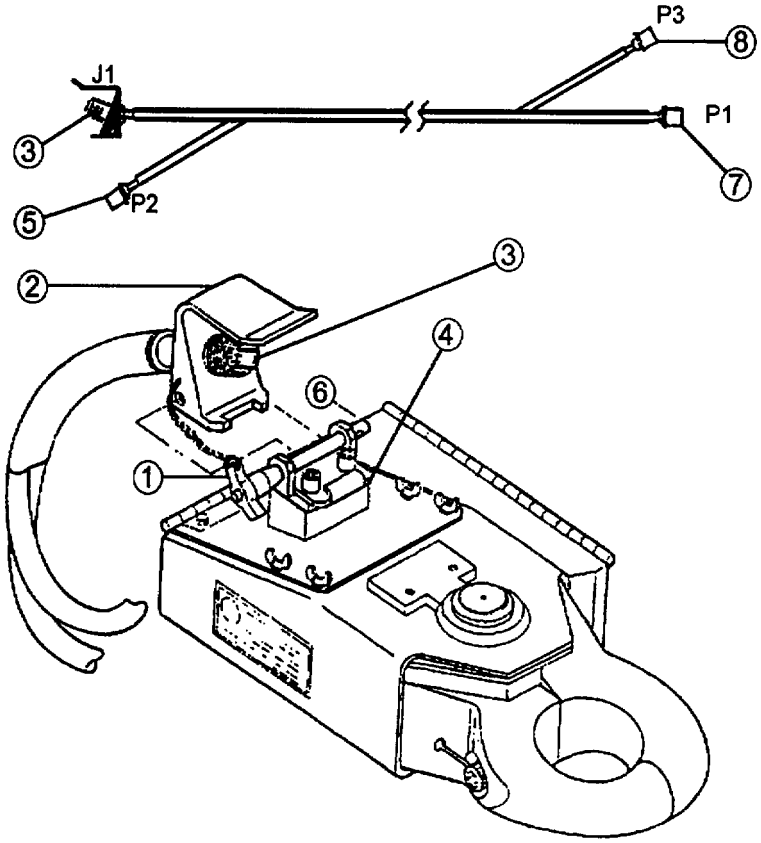

Figure 4.58. Install W5 Branched Cable Assembly

(20) Remove receptacle cover from receptacle A4J1 (6) on trailer disconnect housing.

(21) Secure connector W5P2 (5) to receptacle A4J1 (6).

(22) Run W5 cable (1) (see Figure 4.62) to rear of launcher on left side of launcher to allow connection to safety switch (2), J1 connector. If cable does not fit in holders, tie in place.

(23) Remove connector covers from W5P1 (3) and W5P3 (4) connectors.

Legend:

(1) W5 Cable
(2) Safety Switch
(3) W5P1 Connector
(4) W5P3 Connector
(5) Protective Cap
(6) Receptacle No. 1
(7) Safety Switch Electrical Cable
(8) Solenoid Valve Electrical Connector

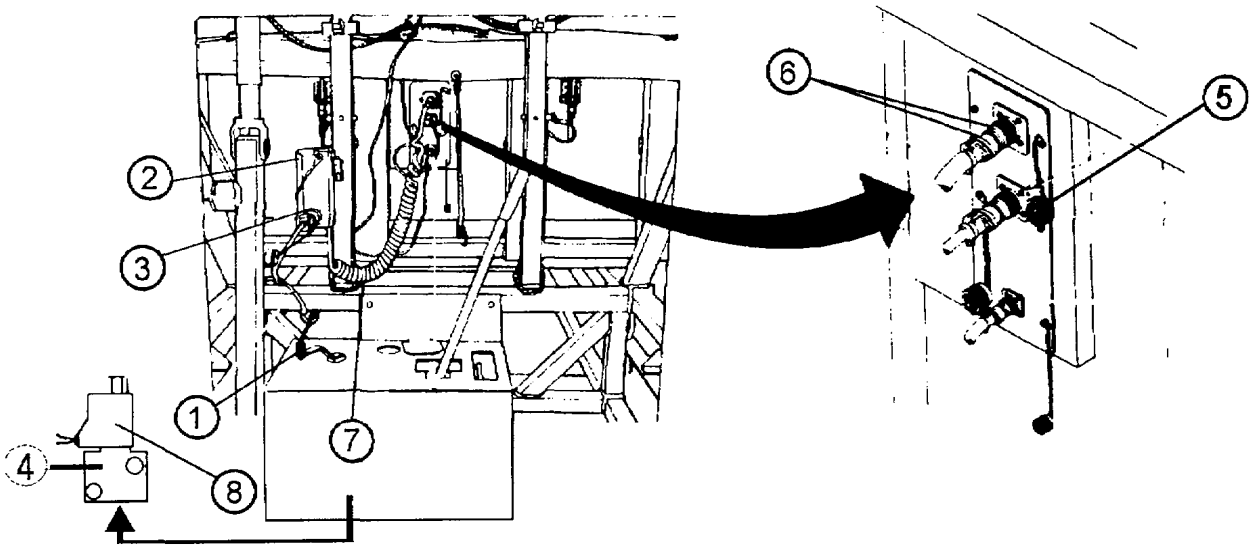

Figure 4.59. W5 Branched Cable Assembly (Left Rear View)

(24) Remove protective cap (5) from receptacle No. 1 (6).

(25) Remove safety switch electrical lead from J1 (7).

(26) Secure safety switch electrical lead (7) to receptacle No. 1 (6).

(27) Secure connector W5P1 from cable W5 (1) to safety switch connector J1 (2).

(28) Secure connector W5P3 of cable W5 (1) to solenoid valve electrical connector (8).

d. Disassembly of Trailer Quick Disconnect Device

(1) Remove two hexagon cap screws (1) (see Figures 4.60 and 4.61) and lockwashers (2) from block section clamp (3).

(2) Use 1/4-inch hex head wrench and remove six self-locking screws (4) and lockwashers from access cover (5).

Legend:

(1) Hex Cap Screws (2)
(2) Lockwashers (2)
(3) Block Section Clamp
(4) Self-locking Screws (6)
(5) Access Cover
(6) Pin
(7) Actuator Compartment Door
(8) Actuator Assembly
(9) Actuator Arm
(10) Self-locking Screws (2)
(11) Straight Pin
(12) Nuts (4)
(13) Screws
(14) Connector Assy
(15) Cover

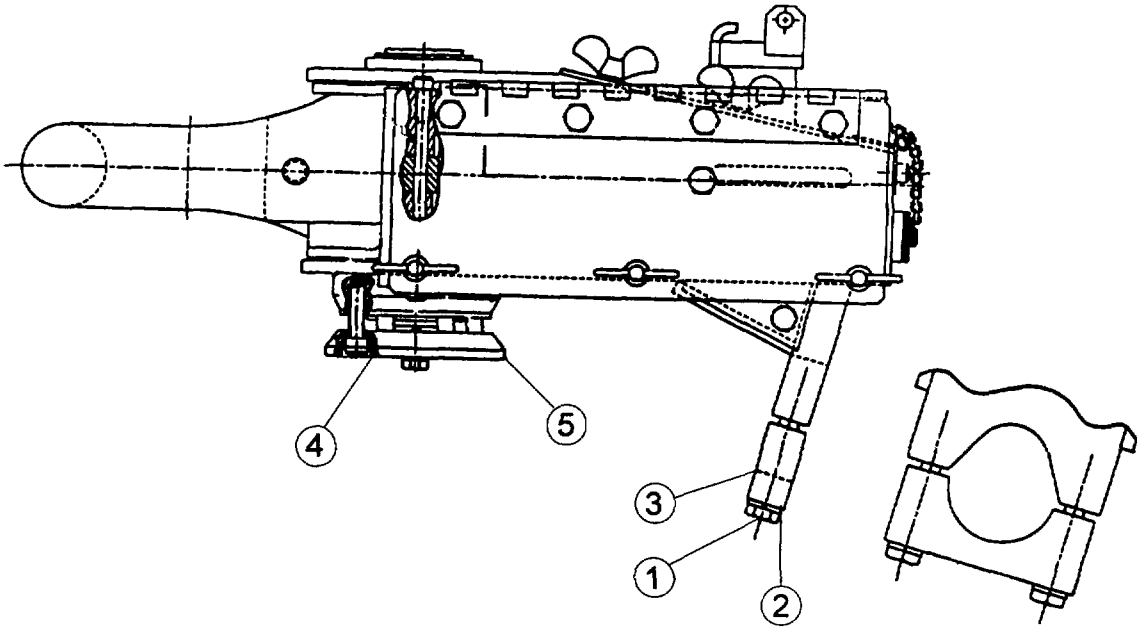

Figure 4.60. Trailer Quick Disconnect Device (Side View)

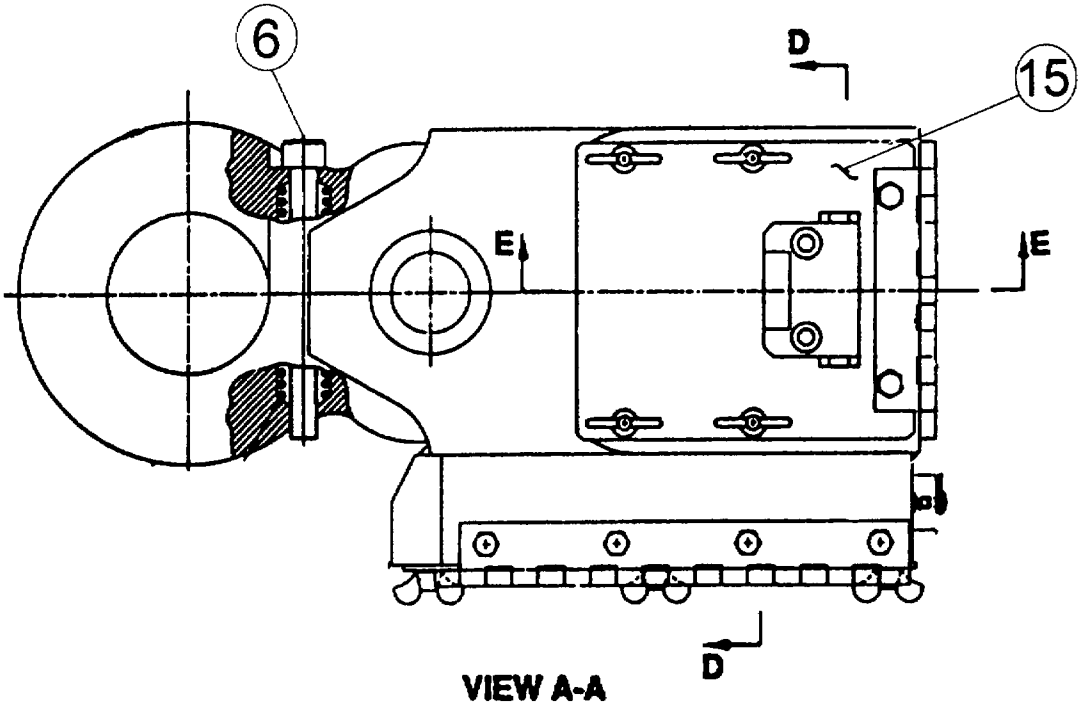

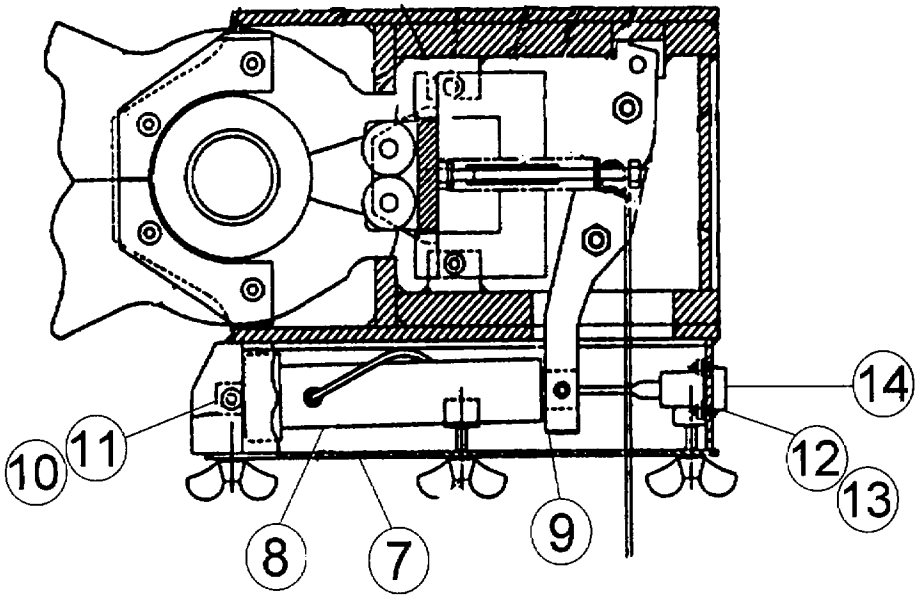

Figure 4.61. Trailer Quick Disconnect Device (Top View)

NOTE

- **WHEN REPLACING INTERNAL PARTS, BE SURE LOCKING PIN (6) IS IN PLACE.**
- **THE LOCKING PIN MUST BE REMOVED FROM THE LOCKED-JAWS POSITION AND PLACED IN THE STORAGE POSITION TO USE THE QUICK RELEASE FUNCTION.**

(3) Remove trailer disconnect device from trailer lunette.

(4) Unscrew wing nuts and open actuator compartment door (7).

(5) Disconnect actuator assembly (8). With two fingers spread the actuator arm (9) and lift top of actuator assembly up and out of the actuator arm.

(6) Use 3/16 inch hex head wrench to remove two self-locking screws (10) from quick disconnect body. Push headless straight pin (11) holding actuator body in place from quick disconnect body.

(7) Remove shrink wrap from actuator wires.

(8) Remove actuator motor wire. Disconnect actuator motor wire from yellow connect wire (port A). Disconnect actuator assembly wire from red connect wire (port B).

(9) Remove four nuts (12) and machine screws (13) from connector assembly (14).

(a) Unscrew four wing nuts on disconnect cover (15) and open cover.

Legend:

(1) Nuts (2)
(2) Bolts (2)
(3) Actuator Arm
(4) Pan Head Machine Screw
(5) Washer
(6) Capscrews (2)
(7) Angle Bracket
(8) Roller Mount Assembly
(9) Hex Head Cap Screw
(10) Mount Roller
(11) Hexagon Plain Nut
(12) Flatwashers (2)
(13) Helical Spring
(14) Spring Guide
(15) Roller Pin Guide
(16) Cotter Pins (2)
(17) Two Headed Pins
(18) Rollers (2)

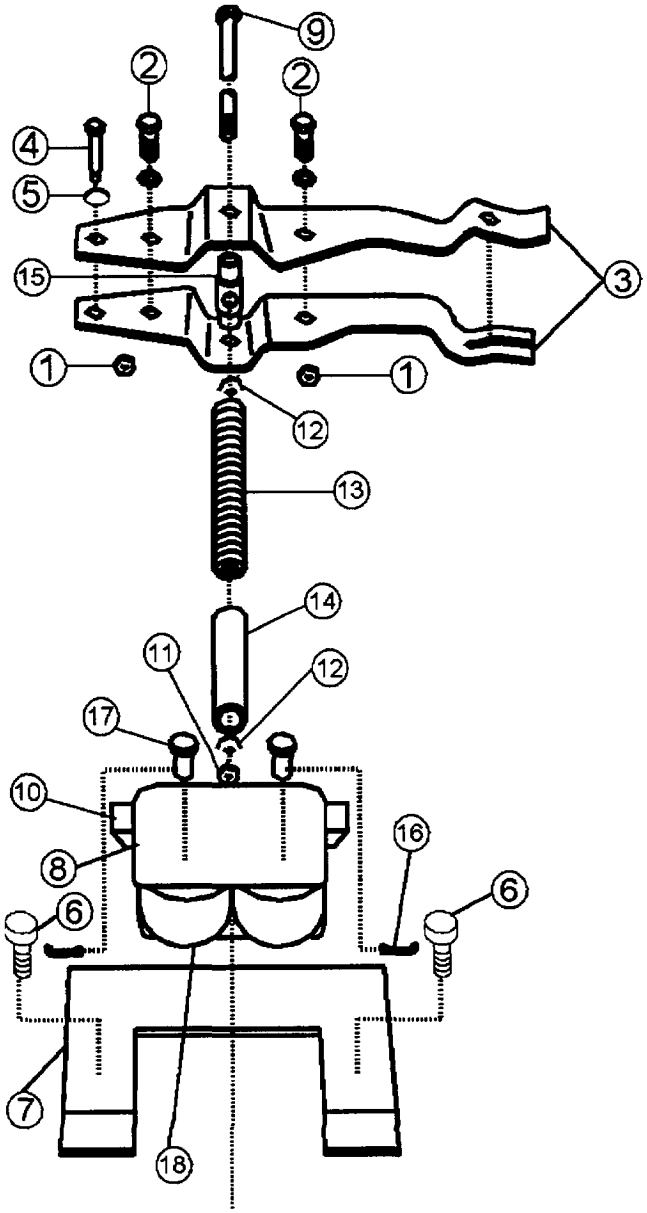

Figure 4.62. Components of Trailer Disconnect Device

(b) Use wrench to remove two 5/16-inch self-locking nuts and bolts (1 and 2) (see Figure 4.62) from actuator arm (3). Use 1/8-inch hex head wrench to remove pan head machine screw (4) and washer (5).

(c) Split actuator arm (3) and remove each arm separately through side slot.

(10) Use a 3/16-inch hex head wrench to remove two cap screws (6) and double angle bracket (7).

CAUTION

MAKE SURE JAWS ARE LOCKED WITH THE LOCKING PIN (6) (SEE FIGURE 4.61) BEFORE REMOVING ROLLER ASSEMBLY.

(11) Remove roller assembly (8) from double angle bracket. Use 7/16 inch-wrench to remove hex head cap screw (9) from mount roller (10).

(12) Using 7/16-inch wrench, remove hexagon plain nut (11) from hex head cap screw (9). Remove two flatwashers (12), helical spring (13), and spring guide (14).

(13) Remove roller pin guide (15).

(14) Remove two cotter pins (16) and discard. Remove two headed pins (17) and rollers (18) from roller mounts (10).

e. Reassembly of Trailer Quick Disconnect Device.

CAUTION

MAKE SURE JAWS ARE LOCKED WITH THE LOCKING PIN (6) (SEE FIGURE 4.63) BEFORE REMOVING ROLLER ASSEMBLY.

(1) Install two rollers (18) and headed pins (17) in roller mount (10) and secure with new cotter pins (16).

(2) Install flatwasher onto hexagon head cap screw (9). Slip roller pin guide (15) onto hexagon head cap screw (9).

(3) Install guide spring (14) and helical spring (13) onto hexagon head cap screw (9).

(4) Install flatwasher (12) onto hexagon head cap screw (9).

(5) Install hexagon plain nut (11) on hexagon head cap screw (9) and tighten using 7/16-inch wrench.

(6) Use 7/16-inch wrench to fasten hexagon head cap screw (9) to roller mount assembly (8).

(7) Slide roller mount into the double angle bracket (7). Place mount and bracket in housing. Use 3/16-inch hex head wrench to tighten two cap screws (6).

(8) To install actuator arms (3), slide each separately through side slot of quick disconnect device. Install 5/16-inch self-locking nut (1) and bolt (2) on top hole of actuator arm. Use 1/8-inch hex head wrench to install pan head machine screw (4) and washer (5). Install other 5/16-inch self-locking nut (1) and bolt (2) on bottom hole of actuator arm. Close disconnect cover (see Figure 4.66) (15) and hand tighten four wing nuts.

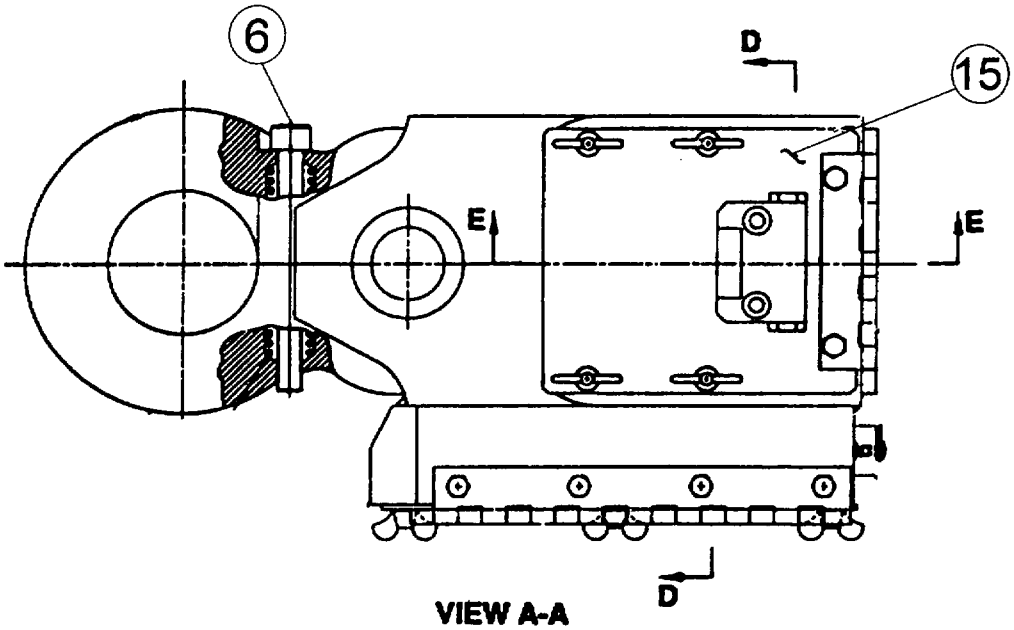

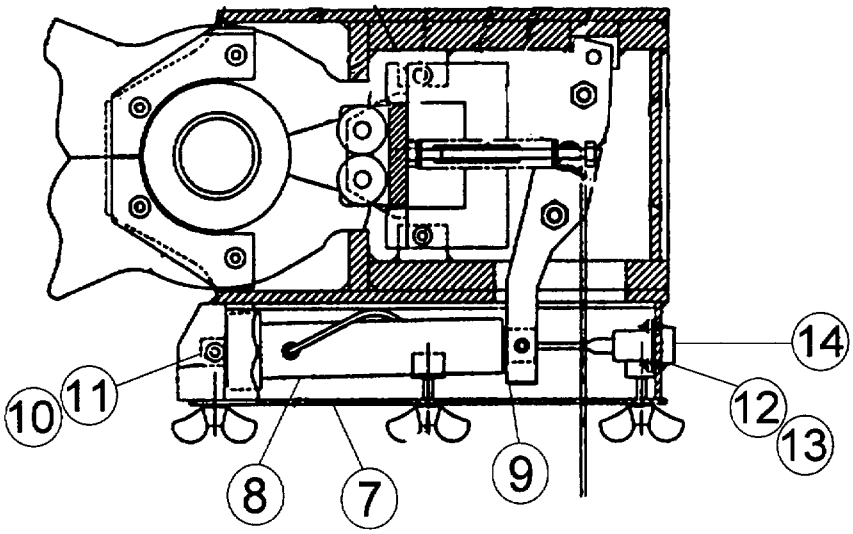

Figure 4.63. Coupler, Drawbar, Ring

(9) Connect actuator assembly wire (red connect wire) to port B. Connect actuator motor wire disconnect (yellow wire) to port A. Shrink wrap wires.

(10) Install connector (14) (see Figure 4.63) using four 5/32-inch nuts (12) and machine screws (13).

(11) Insert headless straight pin (11) into hole that holds actuator body in place to the quick disconnect body. Install two self-locking screws (10) using a 3/16-inch hex head wrench.

(12) Pulling back on actuator arms (9), spread actuator arm with two fingers and slide actuator assembly (8) into place. Close actuator compartment door (7) and tighten three wing nuts.

Legend:

(1) Disconnect Device
(2) Hex Head Screws (6)
(3) Access Cover
(4) Hex Cap Screws (2)
(5) Lockwashers (2)
(6) Clamping Block
(7) Support Block
(8) Trailer Lunette
(9) Cable Bracket
(10) Hex Head Screws (2)

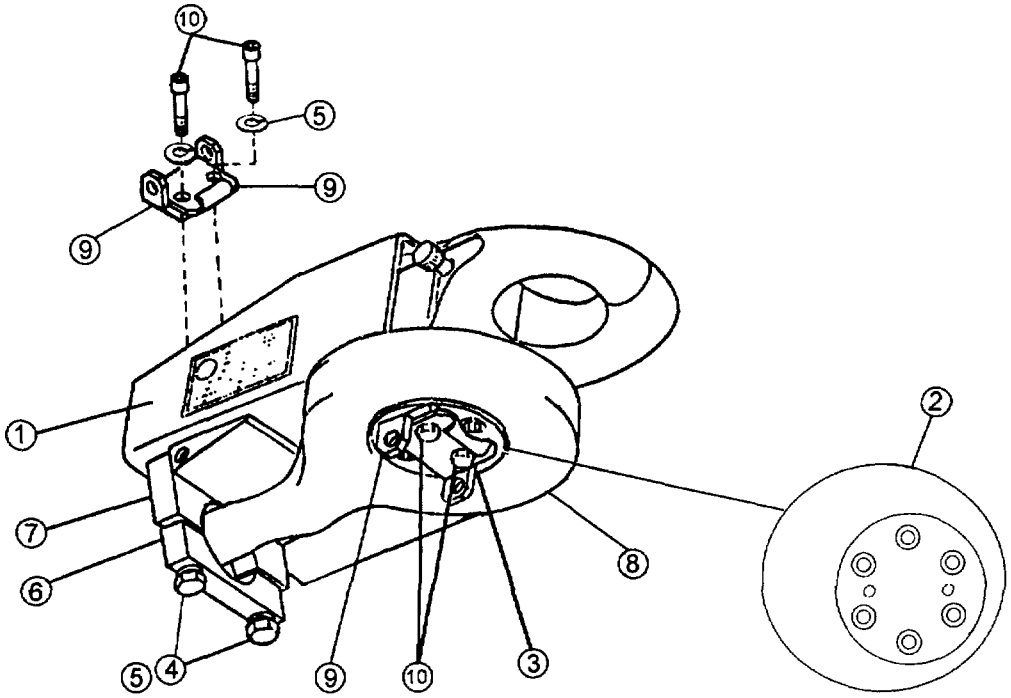

Figure 4.64. Remote Trailer Disconnect

(13) Install trailer disconnect (1) (see Figure 4.64) onto trailer lunette (8).

(14) Use 1/4-inch hex head wrench to install six self-locking screws and lockwashers (2) on access cover (3).

(15) Attach block section clamps (6) with two hexagon head cap screws (4) and lockwashers (5).

4.29 SELECTOR SWITCH ASSEMBLY (MOD 2/3)

a. Initial Setup

- **Tools and Special Tools**
  - General Mechanics Tool Kit (NSN 5180-00-177-7033)

Legend:

(1) Cap
(2) Screw
(3) Chain
(4) Enclosure Body
(5) Hex Head Screws (2)
(6) Knob
(7) Rotary Switch
(8) Housing Indicator
(9) Incandescent Lamp

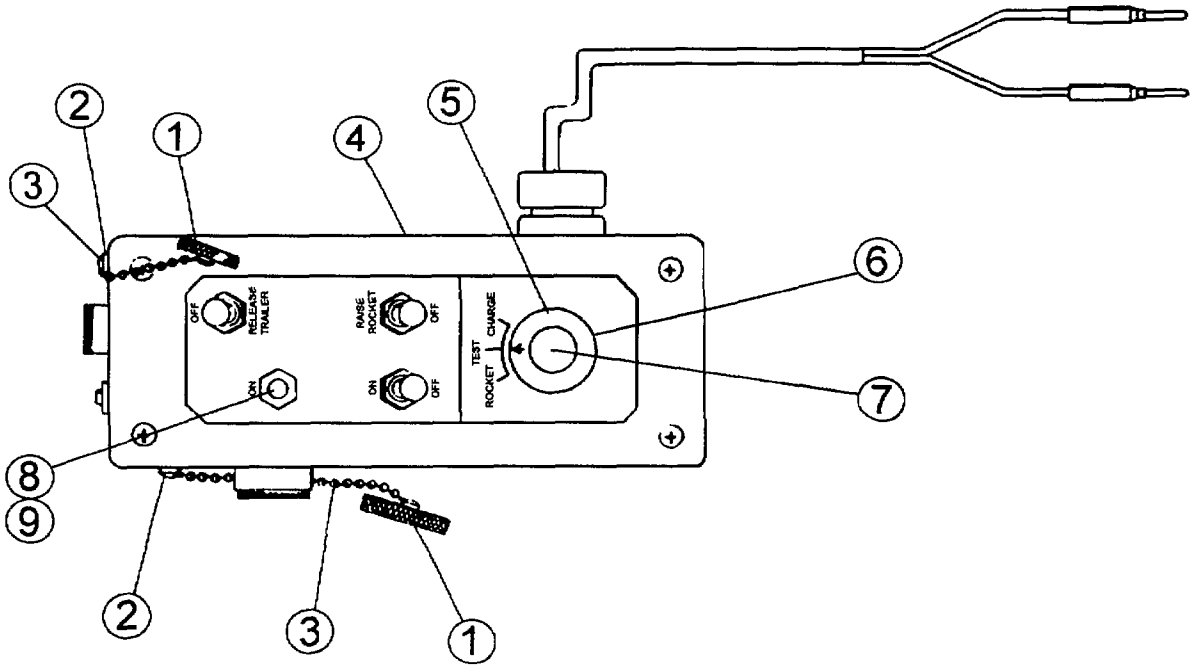

Figure 4.65. Selector Switch Assembly

NOTE

THE PROCEDURE IS THE SAME FOR BOTH A1J1 AND A1J2 CONNECTORS.

b. Replace Cover

(1) Twist cap (1) (see Figure 4.65) remove from connector.

(2) Using cross-tip screwdriver, remove screw (2) attaching cap (1) and chain (3) to enclosure body (4).

(3) Using cross-tip screwdriver, attach cap (1) and chain (3) to enclosure body (4)

(4) Twist cap (1) onto connector.

c. Replace Knob

(1) Using a hex key, loosen two hex head screws (5) and remove knob (6).

(2) Insert knob (6) onto rotary switch (7)

(3) Using a 5/64" hex key, tighten two hex head screws (5).

d. Replace Lamp

(1) With fingers, turn housing indicator (8) counterclockwise and remove.

(2) Remove incandescent lamp (9) from housing indicator (8).

(3) Insert new incandescent lamp (9) into housing indicator (8).

(4) Screw housing indicator (8) clockwise until tight.

4.30 TOUCH-UP PAINTING

a. General. Two distinctly different paints are used on the components of the MICLIC System. Polyurethane (Chemical Agent Resistant Coating) (CARC) paint is used on the MK155 Launcher itself, the M353/M200 Series Trailers and later production M58A4 Line Charge container. Earlier production line charge containers and all rockets are painted with standard ammunition alkyd enamel. TM 43-0139 gives general painting instructions. The basic touch-up procedures for ammunition alkyd enamel and polyurethane CARC follow.

b. Precautions

(1) Refer to Surgeon General LTRADASG-PSP for Complete Painting Procedures if a spray booth and a paint sprayer are being used (see Appendix K).

(2) An approved respirator must be worn by all personnel near a spray painting operation whether using a sprayer or aerosol cans (see TM 43-0139 for complete details on respirator).

(3) Respirators must be worn by all personnel near a brush painting operation if they are (to be) present during the application of a quart or more of alkyd paint or any amount of CARC.

(4) Observe all applicable restrictions, etc., when handling solvents for paint thinning, cleanup, etc. Use only approved containers for solvents. Solvents are flammable and the vapors from them are irritating and, in some cases, toxic. Keep the solvent containers closed whenever you are not dispensing them.

c. Preparation. The temperature of the item to be touched-up and its surroundings must be above 50° F, for proper paint adhesion of alkyd enamel and above 60° F, for CARC.

(1) The surface to be touched-up must be dry and cleaned of dirt, grease and rust.

(a) Clean the area to be touched-up with a clean rag dampened with denatured alcohol. Follow up with a clean dry rag.

(b) If necessary, clean rust off item using copper wool or a non-sparking wire brush. Sandpaper may be used on non-ammunition items and on properly grounded, sealed ammunition items. Sandpaper must not be used on items where explosive is exposed.

(2) Mix and thin primer and paint IAW instructions on cans and sprayer (if one is to be used).

(3) Clear unnecessary personnel from the area if sprayer or spray can is to be used.

d. Priming

NOTE

IF THERE IS MORE THAN JUST A THIN SCRATCH OF BARED METAL, APPLY A THIN COAT OF PRIMER TO THE BARED METAL. FEATHER THE PRIMER SLIGHTLY INTO THE PAINT AROUND THE BARED METAL. ALLOW TO DRY IAW INSTRUCTIONS ON CAN.

e. Painting - Alkyd Enamel. After primer is dry to the touch, apply a thin top coat of enamel, feathering the new paint into the old.

f. Painting - Polyurethane CARC

WARNING

- **AN APPROVED RESPIRATOR MUST BE WORN WHEN MIXING OR PAINTING WITH CARC.**
- **CLOTHING THAT GIVES TOTAL SKIN COVERAGE AND RUBBER GLOVES MUST BE WORN WHEN DEALING WITH CARC. A FACE SHIELD OR SAFETY GOGGLES MUST ALSO BE WORN.**

NOTE

- **THE POT LIFE OF CARC IS APPROXIMATELY 8 HOURS AT A ROOM TEMPERATURE OF ABOUT 70° F. POT LIFE SHORTENS WITH HIGHER TEMPERATURE. IT IS ONLY 2 HOURS AT 100° F. PLAN THE PAINTING OPERATION AND DRYING TIME APPROPRIATELY.**
- **AFTER PRIMER IS DRY TO THE TOUCH, APPLY A THIN TOP COAT OF CARC. FEATHER THE NEW PAINT INTO THE OLD.**

g. Painting - Support Rails. Touch-up paint for marking support rails as shown in Figure 4.66.

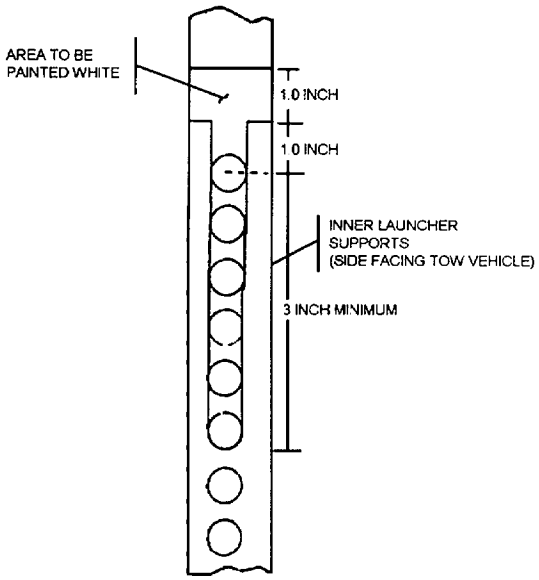

Figure 4.66. Painting Markers on Launcher Supports

THIS PAGE INTENTIONALLY LEFT BLANK

CHAPTER 5
DIRECT SUPPORT AND GENERAL SUPPORT MAINTENANCE

Section I. REPAIR PARTS; TOOLS; SPECIAL TOOLS; TEST, MEASUREMENT, AND DIAGNOSTIC EQUIPMENT (TMDE); AND SUPPORT EQUIPMENT

5.1 COMMON TOOLS AND EQUIPMENT. For authorized common tools and equipment, refer to the (Modified) Table of Organization and Equipment (MTOE), CTA 50-970, or CTA 8-100, applicable to your unit.

5.2 SPECIAL TOOLS, TMDE, AND SUPPORT EQUIPMENT. No special tools or equipment, except multimeter, are required to maintain MICLIC at the direct support.

5.3 REPAIR PARTS. Appendix F lists and illustrates Launcher repair parts and replaces Marine Corps SL-4-08982A stocklist.

Section II. MAINTENANCE PROCEDURES

5.4 GENERAL. This section contains maintenance instructions authorized by the MAC in Appendix B to support MICLIC at the Direct Support and Maintenance Level. Direct Support personnel may also use the instructions listed in chapter 4 (Unit Maintenance) for repairing MICLIC. Instructions are given for the launcher, hydraulic assembly, safety switch, and linear demolition charge container. Munitions specialists will do any additional repairs to the linear demolition charge at the appropriate level of ammunition maintenance procedures. (This is detailed in Chapter 6.) For those items to be repaired by welding, turn items over to welder and explain what repairs are needed. Personnel are listed only if the tasks require more than one. If personnel are not listed, it means that one person is able to do the task. Resources required are not listed unless they apply to the procedure. Maintenance tasks on the launcher and hydraulic assembly require one Construction Equipment Repairer (Army MOS 62B; MC MOS 1341). A Fuel and Electrical Repairer (Army MOS 63G; MC MOS 1142) is required for the maintenance tasks on the electrical safety switch. For specific maintenance on the M353 trailer refer to TM 9-2330-247-14&P, or on the M200 series trailers, refer to TM 9-2330-205-14&P or TB 9-2330-323-30.

5.5 REPAIR/PAINTING LAUNCHER ASSEMBLY

a. <u>This task covers: Repair/Painting of Launcher Assembly</u>

b. <u>Initial Setup</u>

- **Tools**

  - Wire scratch brush (NSN 7920-00-255-5135)
  - Paint sprayer

- **Materials/Parts**

  - CARC polyurethane paint (NSN 8010-01-234-2934 (sand) or 8010-01-229-7546 (green))
  - Denatured alcohol (NSN 6810-00-543-7415)
  - Face shield; Safety Equipment (NSN)
  - Flammable waste can (NSN 7420-00-282-8411)
  - Flint abrasive paper (NSN 5350-00-271-5950)
  - Goggles (NSN 4240-00-052-3776)
  - Laboratory apron (NSN 8415-00-634-5023)
  - Masking tape (NSN 7510-00-198-5831)
  - Plastic gloves (NSN 8030-00-763-48411
  - Respirator; Safety Equipment (NSN 4240-01-246-0314)
  - Rust arresting coating primer (NSN 8030-00-145-0084)
  - Wiping rags (NSN 7920-00-205-1711)

- **Equipment Conditions**

  - Launcher on ground or secured to trailer.

- **References**

  - Appendix H, Polyurethane Chemical Agent Resistant Coating
  - TB MED 502
  - TB MED 514
  - TM 43-0139

- **General Safety Instructions**

  - See warnings that follow.

WARNING

- **TO AVOID INJURY TO EYES, WEAR GOGGLES OR FACE SHIELD WHILE USING WIRE BRUSH AND CHEMICALS.**

- **TO PREVENT EYE AND LUNG DAMAGE, VENTILATE ROOM AND WEAR RESPIRATOR WHEN USING SOLVENTS OR PAINT.**

- **TO AVOID CONTACT OF CARC PAINT WITH SKIN AND EYES, WEAR RUBBER OR PLASTIC GLOVES AND FULL COVERAGE CLOTHING. A LABORATORY APRON IS ADVISABLE WHILE MIXING CARC.**

- **DO NOT SMOKE OR PERMIT ANY SOURCE OF IGNITION NEAR PAINTING OPERATION.**

WARNING

MAINTAIN A CONTINUOUS ELECTRICAL GROUND ON ALL EQUIPMENT TO PREVENT STATIC BUILDUP WHICH COULD PRODUCE A SPARK AND IGNITE THE MATERIAL. APPROVED GROUNDING AND BONDING CONNECTIONS MUST BE USED.

c. Preparation/Painting

(1) Wipe all surfaces of the launcher with rags and denatured alcohol to remove grease and oil.

(2) Using a wire brush and sandpaper, remove all corrosion and loose paint particles from the launcher. Follow-up with a clean, dry rag to remove particles.

(3) Mask all moving part joints, launch rail center, hydraulic fittings, hose, and other areas which are not to be painted using masking tape and paper.

WARNING

USE EYE PROTECTION AND PROTECTIVE GLOVES WHEN MIXING AND USING WASH PRIMER AND CARC PAINT.

NOTE

BOTH PRIMER AND CARC PAINT HAVE LIMITED POT LIFE. CHECK TOUCH-UP INSTRUCTIONS (PARA 4-30) AND INSTRUCTIONS ON CANS AND PLAN OPERATION TIMING APPROPRIATELY.

(4) Mix wash primer IAW instructions on cans.

(5) Paint all bared metal with wash primer. Allow to dry IAW instructions on can for prevailing temperature and humidity.

(6) After primer is dry, mix CARC paint IAW instructions on can.

(7) Paint launcher.

(8) Allow launcher to dry thoroughly before handling.

5.6 REPAIR LAUNCHER RAIL AND SUPPORT AND LAUNCHER FRAME WELDMENT ASSEMBLY. The following task can be done at organization level by the Marine Corps.

a. This task covers: Repairing Launcher Rail and Support Assembly

b. Initial Setup

- **Tools**
  - General Mechanic's Tool Kit (Army NSN 5180-00-177-7033, Marine Corps NSN 5180-00-606-3566)
  - Inert gas shielded arc welding set (NSN 3431-00-691-1415)
  - Portable electric grinder (NSN 5130-01-087-6821)
- **Materials/Parts**
  - Men's gloves (NSN 8415-00-634-4660)
  - Welding eye protector
  - Welding rods are required
  - Wire scratch brush (NSN 7920-00-255-5135)
- **Equipment Conditions**
  - Launcher on ground or mounted on trailer
- **General Safety Instructions**
  - See the following instructions.
- **References**
  - Repair/Painting Launcher Assembly (para 5.5)

WARNING

· **OBSERVE ALL STANDARD WELDING SAFETY PROCEDURES.**

· **USE OPERATION SITE VENTILATION TO DIRECT FUMES FROM OPERATOR WHEN WELDING OR GRINDING ON THE LAUNCHER TO MINIMIZE EXPOSURE TO VAPOR OR DUST FROM CARC PAINT.**

NOTE

WELDING PROCEDURE CAN BE USED ON ANY PART OF LAUNCHER ASSEMBLY FRAME EXCEPT JUNCTURE OF TUBING WELDMENT AND SAFETY SWITCH AND CLOSE TO HYDRAULIC COMPONENTS.

c. Inspect. Inspect frame at all weld joints for broken welds, flaws in welds, or corrosion.

d. Repair. Prepare metal surfaces and repair breaks by rewelding IAW standard welding shop practice.

5.7 SAFETY SWITCH ASSEMBLY REMOVAL, REPAIR, INSPECTION AND REPLACEMENT

a. This task covers: Remove Repair and Replacement

b. Initial Setup

- **Tools**
  - General mechanic's tool kit (Appendix B, Army NSN 5180-00-177-7033, Marine Corps NSN 5180-00-606-3566)
  - Multimeter (Appendix B)
- **Material/Parts**
  - Safety switch assembly (Appendix F)
  - Lock wire (Appendix F)
- **Equipment Conditions**
  - Launcher secured to trailer
- **Reference**
  - Test and adjust safety switch assembly (para 5.8)

5.7.1 REMOVE SAFETY SWITCH ASSEMBLY

a. Removal Procedure

(1) Remove screw (1) (see Figure 5.1) from safety switch assembly cover using No. 1 cross-tip screwdriver.

(2) Remove safety switch cover (2).

(3) With a 3/32-inch hex key and 1/4-inch combination box and open-end wrench, remove the four hex nuts (3), lockwashers (4) and capscrews (5) which attaches the cable receptacle connector (6) to safety switch housing. Disconnect plug connector (7) from cable receptacle connector (6) before switch can be removed.

(4) Remove lockwire from safety switch jamnut (13) with needle-nose pliers.

(5) Remove self-locking nut (10) from safety switch shaft (8) using 7/32-inch hex-head socket key and 3/8-inch combination box and open-end wrench.

(6) Slide switch roller lever (11) and washer (12) from safety switch shaft (8).

(7) Remove jamnut (13) and lockwasher (14) from launcher safety switch shaft (8) with 5/6-inch combination box and open-end wrench.

(8) Remove launcher safety switch assembly.

(a) Remove safety switch (15).

Legend:

(1) Screw
(2) Cover, Safety Switch
(3) Hex Nuts (4)
(4) Lockwashers (4)
(5) Capscrews (4)
(6) Connector, Receptacle, P-1 Plug
(7) Connector, J1 Plug
(8) Safety Switch Shaft
(9) Roller Lever
(10) Nut, Self-Locking
(11) Roller Lever
(12) Washer
(13) Jamnut
(14) Lockwasher
(15) Safety Switch
(16) Machine Screws (3)
(17) Washers (3)
(18) Lockwashers (3)
(19) Hex Nuts (3)
(20) Plastic Block
(21) Cable
(22) Cable Clamp
(23) Switch

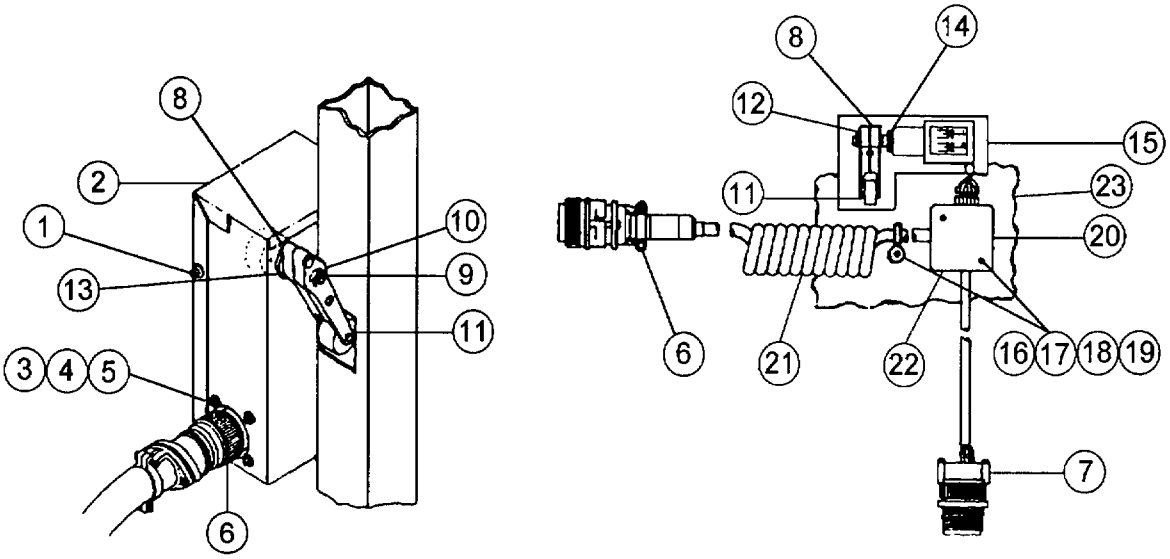

Figure 5.1. Remove or Replace Safety Switch Assembly

(b) Using a No. 2 cross-tip screwdriver and 3/8-inch combination box and open-end wrench, unscrew three machine screws (16) and remove along with washers (17), lockwashers (18) and 3/8-inch hex nuts (19) through molded plastic block (20) and cable clamp (22) from safety switch housing (23).

(c) Remove molded plastic block (20) with cable (21), receptacle connector (6), wire and connector (7) with safety switch (15) connected. Remove the cable clamp (22).

5.7.2 SAFETY SWITCH ASSEMBLY REPAIR

a. Remove the entire safety switch assembly by using the preceding instructions:

(1) Visually inspect wiring for broken wires or frayed insulation.

(2) Repair wiring breaks or reinsulate frayed areas.

(3) Check continuity for broken leads as explained in Chapter 4.

(4) Replace safety switch assembly if continuity indicates bad switch.

(5) Replace safety switch assembly if molded block has been opened.

5.7.3 VISUAL INSPECTION AND CONTINUITY TESTING OF THE LAUNCHER SAFETY SWITCH ASSEMBLY

a. Inspection and Continuity Procedure

(1) Using Figure 5.3 as a guide, begin the diagnosis with the plug connector, P1. Unscrew connector plug screws (1) from plug connector (2).

(2) Unscrew retainer screws (3) from strain relief (4) and disassemble from plug connector bracket (5).

(3) Draw back the electric tiedown strap (6) and bushings (7), (8), (9) and (10) protective wire covering enough to inspect the soldering of the wires (11) to the connector plug pins of P1.

(4) Ensure that the white wire is soldered to pin A of P1, the green wire to B of P1 and the black wire C of P1.

(5) Correct and resolder wires as necessary, using soldering flux to facilitate good connections.

(6) Replace electric tiedown strap (6) and bushings (7) through (10).

(7) Reassemble strain relief (4) using screws (3) to plug connector plug bracket (5).

Legend:

(1) Connector Screws (2)
(2) Connector Plug, P1
(3) Retaining Screws (2)
(4) Strain Relief
(5) Connector Bracket
(6) Tiedown Strap
(7) Bushing
(8) Bushing
(9) Bushing
(10) Bushing
(11) Wire
(12) J1 Wiring
(13) Receptacle Connector, J1
(14) Safety Switch
(15) Safety Switch Lead
(16) Plastic Block

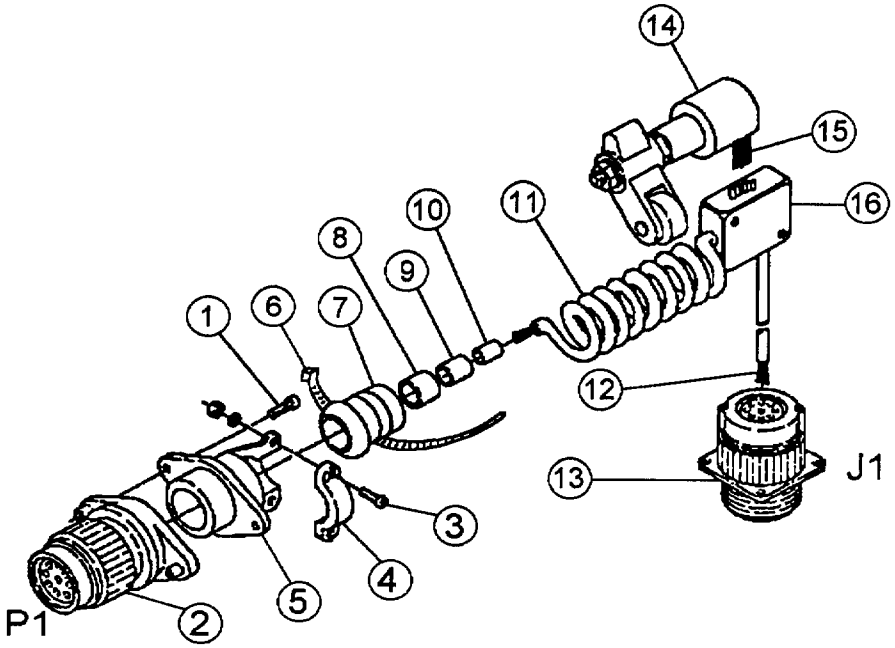

Figure 5.2. Safety Switch Assembly Detailed Diagram

(8) Reassemble connector bracket (5) to plug connector (2) using plug connector plug screws (1).

(9) Inspect the receptacle connector J1 wiring (12) to the receptacle connector (13) pins for proper orientation and soldering. Ensure that the white wire is soldered pin A of J1, the green wire is soldered to B of J1 and the black wire is soldered to C of J1.

(10) Correct and resolder wires as necessary, using soldering flux to facilitate good connections.

(11) Retest safety switch (14) continuity with the multimeter, using steps (2), (3) and (5) as shown in para. 4.7.b.

NOTE

ENSURE THAT CONTINUITY EXISTS BETWEEN PINS A, B AND C OF THE PLUG CONNECTOR, P1 (2) AND PINS A, B AND C OF RECEPTACLE CONNECTOR, J1 (13), RESPECTIVELY.

(12) If continuity does not exist in any one set of pins when tested, then recheck proper wiring from paragraph 4.7b and soldering of wires to the pins as explained in paragraph 5.7.3a (4) for the P1 connector and paragraph 5.7.3a (9) for the J1 connector.

(13) If the wiring is correct, check the safety switch wire leads (15) of Figure 5.2 for broken or grounded leads.

NOTE

THE WIRING HARNESS INCLUDES (11), (12), (14), (15) AND (16) OF FIGURE 5.3.

5.7.4 REPLACEMENT OF THE SAFETY SWITCH ASSEMBLY

a. Replace molded plastic block (20) (see Figure 5.3) with cable (21), receptacle connector (6), wire and connector (7) connected with safety switch (15) by using the following steps:

(1) Using a 3/8-inch combination box and open-end wrench, attach and tighten new molded plastic block (20) to rear of safety switch housing (23) with two machine screws (16), washers (17), lockwashers (18) and 3/8-inch hex nuts (19).

(2) Position new cable assembly into cable clamp (22) and secure to rear of safety switch housing (23) with one machine screw (16), washer (17), lockwasher (18) and 3/8-inch hex nuts (19).

(3) Position new safety switch (15) with shaft extended through opening in assembly body.

(4) Install jamnut (13) and lockwasher (14) onto threaded portion of safety switch shaft (8) with 5/8-inch combination box and open-end wrench. (Make sure aligning studs enter guide holes.)

NOTE

DO NOT TIGHTEN JAMNUT YET. ROLLER LEVER SHOULD BE ADJUSTED TO PROPER ANGLE. REFER TO PARAGRAPH 5.8.

(5) Install lockwire onto roller lever lockscrew (9). Then place switch roller lever (11) onto the safety switch.

(6) Install washer (12) and tighten self-locking nut (10) on safety switch shaft (8) using 3/8-inch combination box and open-end wrench.

(7) Tighten jamnut (13) with 5/8-inch combination box and open-end wrench.

(8) Install lockwire on jamnut (13).

(9) Using 3/8-inch combination box and open-end wrench, attach and tighten new cable receptacle connector (6) to safety switch assembly with four screws (5), lockwashers (4) and hex nuts (3).

(10) Replace safety switch assembly cover (2).

(11) Install screw (1) into safety switch assembly cover (2) using No. 1 cross-tip screwdriver.

(12) Test and adjust launcher safety switch assembly (paragraph 5.8).

Legend:

(1) Screw
(2) Cover, Safety Switch
(3) Hex Nuts (4)
(4) Lockwashers (4)
(5) Capscrews (4
(6) Connector, Receptacle, P1
(7) Connector, Plug, J1
(8) Switch Shaft
(9) Roller Lever
(10) Nut, Self-Locking
(11) Roller Lever
(12) Washer
(13) Jamnut
(14) Lockwasher
(15) Safety Switch
(16) Machine Screws (3)
(17) Washers (3)
(18) Lockwashers (3)
(19) Hex Nuts (3)
(20) Plastic Block
(21) Cable (6)
(22) Cable Clamp
(23) Switch Housing

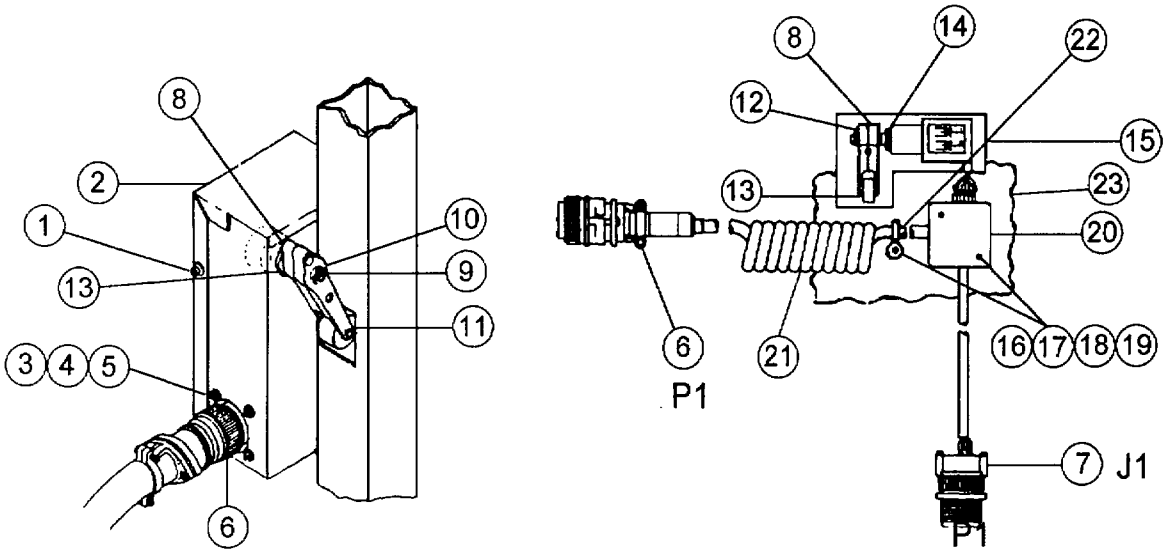

Figure 5.3. Remove or Replace Safety Switch Assembly

5.8 TEST AND ADJUST LAUNCHER SAFETY SWITCH ASSEMBLY

a. <u>This task covers: Test and Adjust</u>

b. <u>Initial Setup</u>

- **Tools**
  - General mechanic's tool kit (Appendix B)
  - Multimeter (Appendix B)
- **Equipment Conditions**
  - Launcher secured to trailer and at 0° elevation.

c. Test

(1) Set multimeter to "Ohms".

(2) Connect one multimeter lead to pin "A" of switch plug connector (1) (see Figure 5.4) and the other to socket "A" of switch socket connector (2).

NOTE

THE MULTIMETER SHOULD NOT REGISTER (INDICATING CIRCUIT OPEN).

(3) If multimeter registers, adjust the switch roller lever (3) using method in ADJUST instructions below.

(4) Remove multimeter leads from switch plug connector (1) and switch socket connector (2).

d. Adjust

(1) Using a flat-tip screwdriver, turn screw (4) counter clockwise until meter goes to opposite end of scale from zero indicating an open circuit.

(2) Raise launch rail to 45-47°. Multimeter should read zero ohms (short circuit). If meter does not read zero, turn screw (4) clockwise until meter reads zero.

(3) Lower launch rail back to 0°. Assure meter again registers open circuit as in step (1).

(4) Repeat above three steps as necessary to adjust the switch so that it shows an open circuit when rail is at 0° and a short circuit when it is elevated to 45-47°.

Legend:

(1) Plug Connector
(2) Socket Connector
(3) Roller Lever
(4) Screw, Adjustment

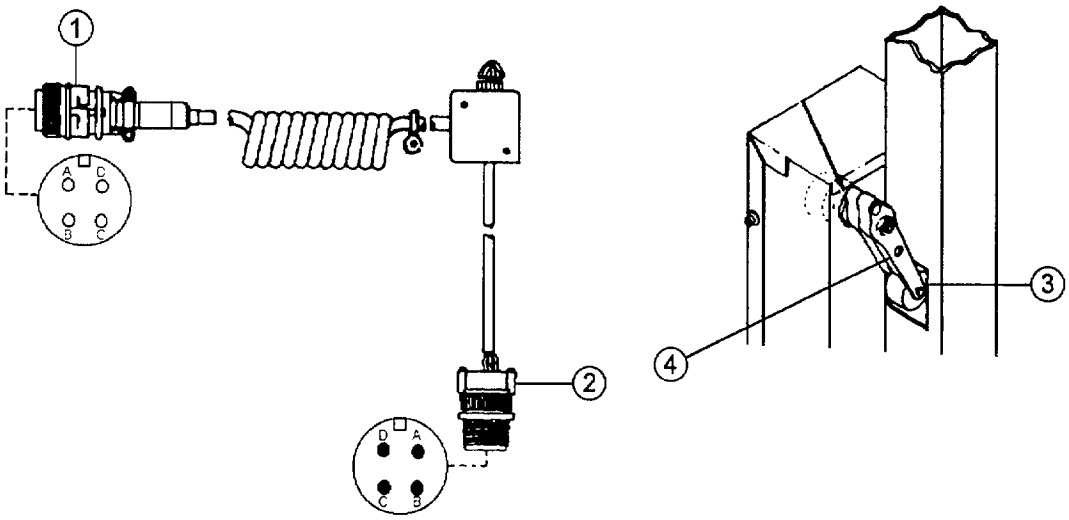

Figure 5.4. Test and Adjust Safety Switch Assembly

5.9 SELECTOR SWITCH BOX REPAIR (MOD 0/1). Use the following procedures to correct and/or replace components of selector switch box, Figure 5.5.

a. <u>This task covers: Selector Switch Box Repair</u>

b. <u>Initial Setup</u>

- **Tools**

  - General Mechanic's Tool Kit (Army NSN 5180-00-177-7033, Marine Corps NSN 5180-00-606-3566)
  - Multimeter (NSN 6625-00-999-6282)
  - Soldering and Desoldering Set (NSN 3459-00-460-7198)

- **Materials/Parts**

  - Electrical Tape (NSN 5970-00-686-9153)
  - Flatwasher (NSN 5310-01-141-6672)
  - Gasket (NSN 5330-00-950-1970)
  - Helical Lockwasher
  - Hex Nut (NSN 5310-00-934-9748)
  - Socket Head Screws (NSN 5305-00-068-5414)
  - Solder (NSN 3439-00-555-4629)

- **General Safety Conditions**
  - Protect hands from burns.
  - Avoid breathing solder fumes.

c. Opening the Selector Switch Box for MOD 0 and MOD 1

(1) Remove four machine screws (1) (see Figure 5.5) holding selector switch box (2) and lid (3).

(2) Remove selector switch cage (4).

(3) Using 5/64-inch hex head key to loosen but do not remove setscrews on knob (5). Pull knob from selector switch box.

(4) Using 9/16-inch wrench remove retaining nut (6) under switch knob (5) from switch (7).

(5) Pull lid (3) carefully from box to gain access to the selector switch.

(6) Unscrew stuffing tube nut (8) on cable assembly No. 2 (9) and slide up cable. Push cable into box (2) to free cable from its restraint.

d. Cable Assembly No. 2 Repair

(1) If wire insulation (10) is damaged where wire leads (11) branch, wrap the P3 and P4 wire leads insulation (10) where the two wire leads (11) branch using electrical tape.

(2) Ensure that branched wire lead P3 is soldered to tab 2 on selector switch (7) and P4 wire lead is soldered to wiper tab 1. Correct as necessary.

NOTE

FIGURE 5.7 SHOWS THE WIRING DIAGRAM OF THE SELECTOR SWITCH ASSEMBLY. ENSURE PROPER WIRING OF THE SELECTOR SWITCH BY USING FIGURE 5.7, TAB NUMBER ORIENTATION OF SELECTOR SWITCH, FOR THE PHYSICAL CONNECTIONS OF THE BRANCHED P3 AND P4 LEADS AND C3, CABLE CONNECTOR.

e. Cable Assembly No. 2 Replacement

(1) If one or both wire lead(s) (11) require replacement, proceed as follows:

(a) Unsolder the wire(s) of branched cable assembly no. 2 (9).

Legend:

(1) Screws
(2) Switch Box
(3) Lid
(4) Cage
(5) Knob
(6) Retaining Nut
(7) Switch
(8) Tube Nut
(9) Cable Assembly No. 2
(10) Leads Insulation
(11) Wire Leads
(12) Strain Piece
(13) Strain Piece
(14) Strain Piece
(15) Cable Connector (C3)

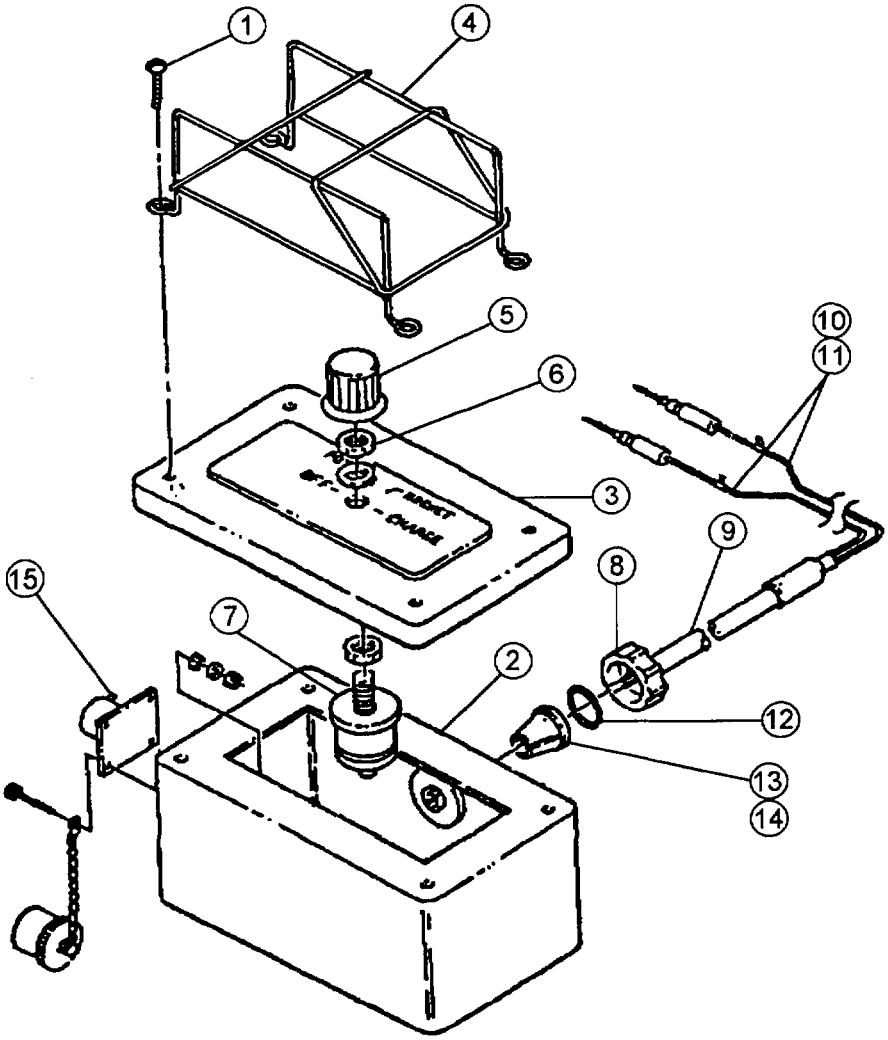

Figure 5.5. Selector Switch Box Parts Breakdown

(b) Pull old blasting machine cable wires (9) from stuffing tube pieces (12), (13) and (14).

(c) Feed new cables through stuffing tube pieces (12), (13) and (14) and into cable switch box (2) in the same manner as originally removed.

(d) Solder wire-end of new cable to cable switch (7) using Figure 5.5.

NOTE

SWITCH SHOW "OFF" POSITION. THERE ARE NO WIRE CONNECTS TO TAB 1.

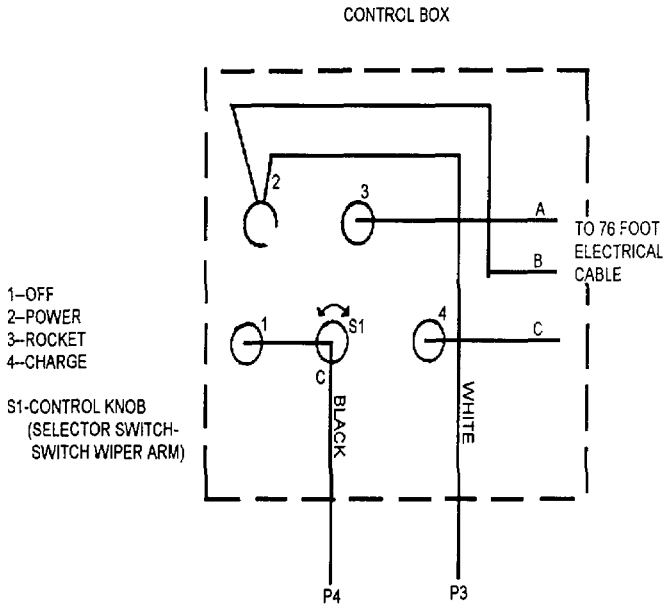

Figure 5.6. Selector Switch Box Wiring Diagram

(e) Secure stuffing tube pieces (12), (13) and (14).

(2) Using Figure 5.6, ensure that the wire connections are correct with pin A of C3, cable connector wire is soldered to tab 3 of the selector switch, pin B of C3 to tab 2, pin C of C3 to tab 4.

(3) If necessary, correct and/or replace the wiring of the selector switch Figure 5.5.

5.10 REPAIR SELECTOR SWITCH ASSEMBLY FOR MOD 2 AND MOD 3

a. Initial Setup

- **Tools and Special Tools**

  - General Mechanics Tool Kit (NSN 5180-00-177-7033)
  - Multimeter - AN/URM-105C (NSN 6624-00-999-6282)
  - Solder and Desoldering Set (NSN 3459-00-460-7198)

- **Materials/Parts**

  - Gasket (MS52000-3)
  - Gasket (MS52000-6)
  - Preformed Packing (MS19622/17-0001)
  - Preformed Packing (MS28775-214)
  - Sealing Compound (NSN 8030-00-081-2330)
  - Self-locking nut (MS21042L04)
  - Solder (NSN 3439-00-555-4629)
  - Wire, Electrical (M16878/IBHB0)
  - Wire, Electrical (M16878/IBHB9)

- **Equipment Condition**

  - Electrical control box removed from launcher.

- **Applicable Configuration**

  - MODs 2/3

- **General Safety Instructions**

  - Wear eye protection while performing this procedure.

b. Repair Selector Switch Assembly

(1) Remove four enclosure assembly screws (1) (see Figure 5.7) and o-ring (2).

(2) Inspect and repair component parts of selector switch assembly per the following paragraphs.

(3) Install/tighten four enclosure assembly screws (1) and new preformed packings (2) through enclosure cover (3) into enclosure body (4).

Legend:

(1) Assembly Screws
(2) O-Ring
(3) Cover, Enclosure
(4) Body, Enclosure

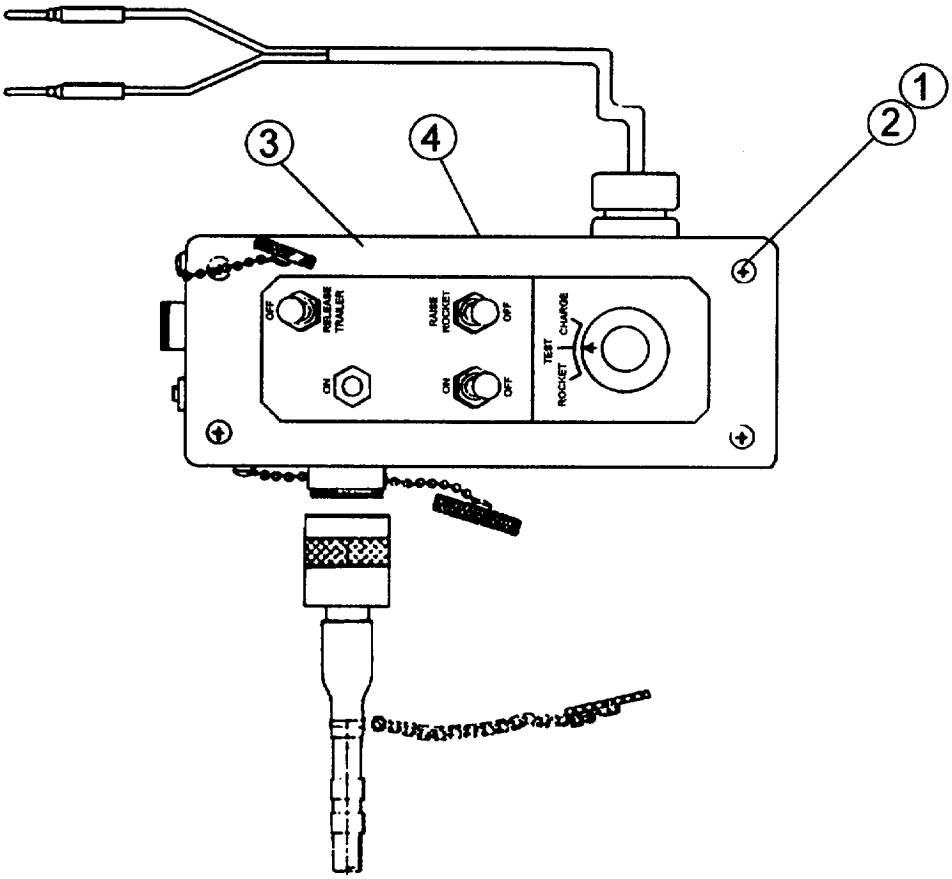

Figure 5.7. Selector Switch Assembly MOD 2/MOD 3

Legend:

(1) Knob
(2) S4 Rotary Switch
(3) Cable Assembly
(4) Receptacle Connector
(5) Enclosure Cover
(6) S3 Toggle Switch
(7) S2 Toggle Switch
(8) S1 Toggle Switch
(9) DS1 ON Lamp
(10) J2 Receptacle Connector
(11) J1 Connector
(12) CB1 Circuit Breaker

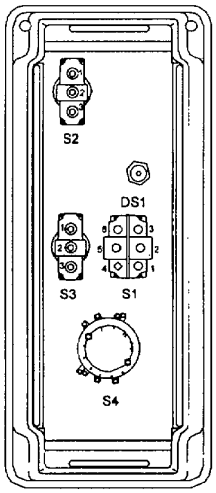

INSIDE VIEW

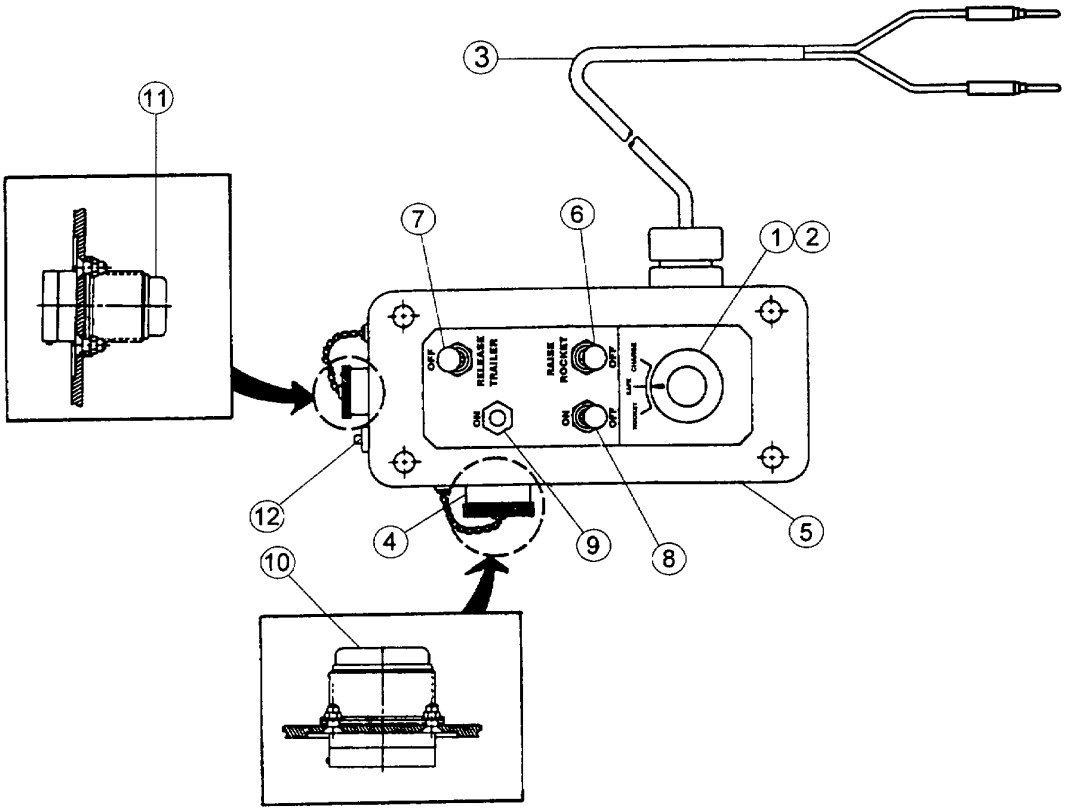

Figure 5.8. Selector Switch Assembly MOD 2/3

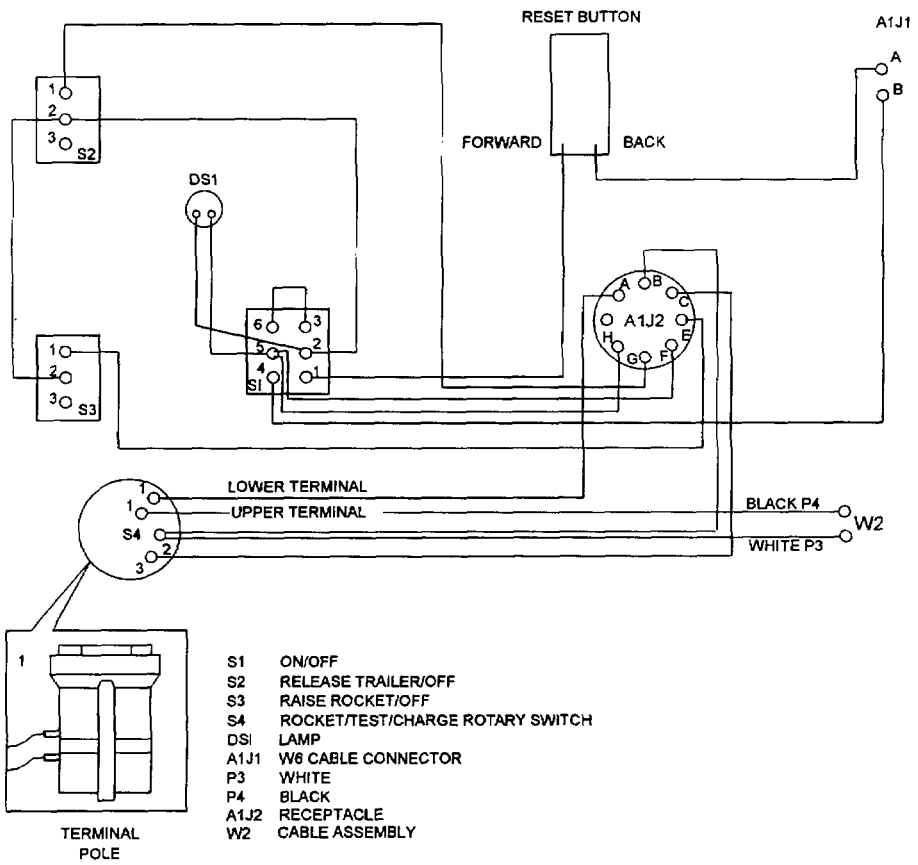

Figure 5.9. Wiring Diagram; Selector Switch Assembly MOD 2/3

NOTE

FOR ALL WIRE CONNECTIONS FROM S4 TO A1J2 USE AWG 18 WIRE (BLACK). FOR ALL OTHER WIRE CONNECTIONS, EXCLUDING THOSE FROM W2 TO S4, USE AWG 18 WIRE (WHITE).

c. Replace ROCKET/SAFE/CHARGE Rotary Switch (S4) and Knob

(1) Use 5/64-inch hex key to loosen two hex key screws. Remove knob (1) (see Figure 5.8) from S4 rotary switch (2).

(2) Remove lock nut/washer and S4 rotary switch (2).

(3) Unsolder five wires from S4 rotary switch (2):

(a) Two wires from cable assembly (3):

1 P3 (white wire) from pole 2.

2 P4 (black wire) from lower pole.

(b) Three black wires from receptacle connector (4):

1 Wire from port A on receptacle connector (4) to pole 1 on S4 rotary switch (2).

2 Wire from port B on connector receptacle (4) to pole 2 on rotary switch (2).

3 Wire from port C on connector receptacle (4) to pole 3 on rotary switch (2).

(4) Install S4 rotary switch (2) into hole on enclosure cover (5). Install and tighten lock nut/washer until S4 rotary switch is tight against cover (5).

(5) Install knob (1) onto S4 rotary switch shaft (2). Use 5/64-inch hex key to tighten two hex key screws until knob is tight against shaft.

(6) Solder two wires from cable assembly (3) onto S4 rotary switch (2):

(a) P3 (white wire) to pole 2.

(b) P4 (black wire) to lower pole.

(7) Solder three black wires from connector receptacle {4) to S4 rotary switch (2):

(a) Wire from port A on connector receptacle (4) to pole 1 on S4 rotary switch (2).

(b) Wire from port B on connector receptacle (4) to pole 2 on S4 rotary switch (2).

(c) Wire from port C on connector receptacle (4) to pole 3 on S4 rotary switch (2).

d. Replace Raise Rocket/OFF Toggle Switch (S3)

(1) Remove lock nut, flat washer, and S3 toggle switch (6) (see Figure 5.8) from enclosure cover (5).

(2) Remove wire from terminal 2 (running to S2 toggle switch (7)).

(3) Remove wire from terminal 1 (running to port E on connector receptacle (4)).

(4) Install S3 toggle switch (6) into RAISE ROCKET/OFF hole on enclosure cover (5). Install lock nut and flat washer. Tighten lock nut until it is tight against enclosure cover (5).

(5) Install wire coming from S2 toggle switch (7) onto terminal 2.

(6) Install wire coming from port E on connector receptacle (4) onto terminal 1.

e. Replace ON/OFF Toggle Switch (S1)

(1) Remove lock nut, washer, and S1 toggle switch (8) from enclosure cover (5).

(2) Remove two wires from terminals 2 and 5 (running to DS1 ON lamp (9)).

(3) Remove two other wires from terminal 5 (running to ports H and F on J2 receptacle connector (10)).

(4) Remove one wire from terminal 4 (running to port B on J1 receptacle connector (11)).

(5) Remove one wire from terminal 2 (running to RELEASE TRAILER/OFF S2 toggle switch (7)).

(6) Remove one wire from terminal 1 (running to terminal 2 of CB1 circuit breaker (12)).

(7) Remove jumper wire running from terminals 3 and 6 on S1 toggle switch (8).

(8) Insert S1 toggle switch (8) into enclosure cover (5). Install lock nut and washer. Tighten lock nut until S1 toggle switch (8) is tight against enclosure cover (5).

(9) Install two wires running from DS1 ON lamp (9) onto terminals 2 and 5 of S1 toggle switch (8).

(10) Install two wires running from ports H and F on J2 receptacle connector (10) onto terminal 5 of S1 toggle switch (8).

(11) Install one wire running from RELEASE TRAILER/OFF S2 toggle switch (7) onto terminal 2 of S1 toggle switch (8).

(12) Install one wire running from terminal 2 of CB1 circuit breaker (12) onto terminal 1 of S1 toggle switch (8).

(13) Install one wire running from port B on J1 receptacle connector (11) onto terminal 4 of S1 toggle switch (8).

(14) Install jumper wire running from terminal 3 to terminal 6 of S1 toggle switch (8).

f. Replace Lamp Assembly (DS1)

(1) Remove lock nut, washer and lamp assembly (9) (see Figure 5.8) from enclosure cover (5).

(2) Remove two wires from terminals 2 and 5 on S1 toggle switch (8)

(3) Remove lock nut and washer from DS1 and insert lamp assembly (9) into proper hole in enclosure cover (5).

(4) Install lock nut and washer onto lamp assembly. Tighten lock nut against enclosure cover (5).

(5) Install two wires from lamp assembly (9) onto terminals 2 and 5 of S1 toggle switch (8).

g. Replace RELEASE TRAILER/OFF Toggle Switch (S2)

(1) Remove lock nut, washer and S2 toggle switch (7) (see Figure 5.8) from enclosure cover (5).

(2) Remove wire from terminal 1 (running to port G of J2 receptacle connector (10)).

(3) Remove two wires from terminal 2 of S2 toggle switch (one wire running to terminal 2 of S1 toggle switch (8) and the other wire running to terminal 2 of S3 toggle switch (6).

(4) Insert S2 toggle switch (7) through hole in enclosure cover (5).

(5) Install washer and lock nut onto S2 toggle switch (7). Tighten lock nut until it is tight against enclosure cover (5).

(6) Install one wire running from port G of J2 receptacle connector (10) onto terminal 1 of S2 toggle switch (7).

(7) Install two wires onto terminal 2 of S2 toggle switch (7) and run the other end of the wires as follows:

(a) One wire runs to terminal 2 of S1 toggle switch (8).

(b) One wire runs to terminal 2 of S3 toggle switch (6).

Legend:

(1)	CB1 Circuit Breaker	(11)	Gasket
(2)	DS1 Indicator Lamp	(12)	Gasket
(3)	J1 Receptacle Connector	(13)	Socket HD Cap Screws
(4)	S1 Toggle Switch	(14)	Self-locking Nuts
(5)	Enclosure Body	(15)	Stuffing Tube Nut
(6)	S4 Rotary Switch	(16)	Cable Assembly
(7)	J2 Receptacle Connector	(17)	Stuffing Tube Plug
(8)	S2 Toggle Switch	(18)	Stuffing Tube Tension Nut
(9)	S3 Toggle Switch	(19)	Stuffing Tube Body
(10)	Socket HD Cap Screws		

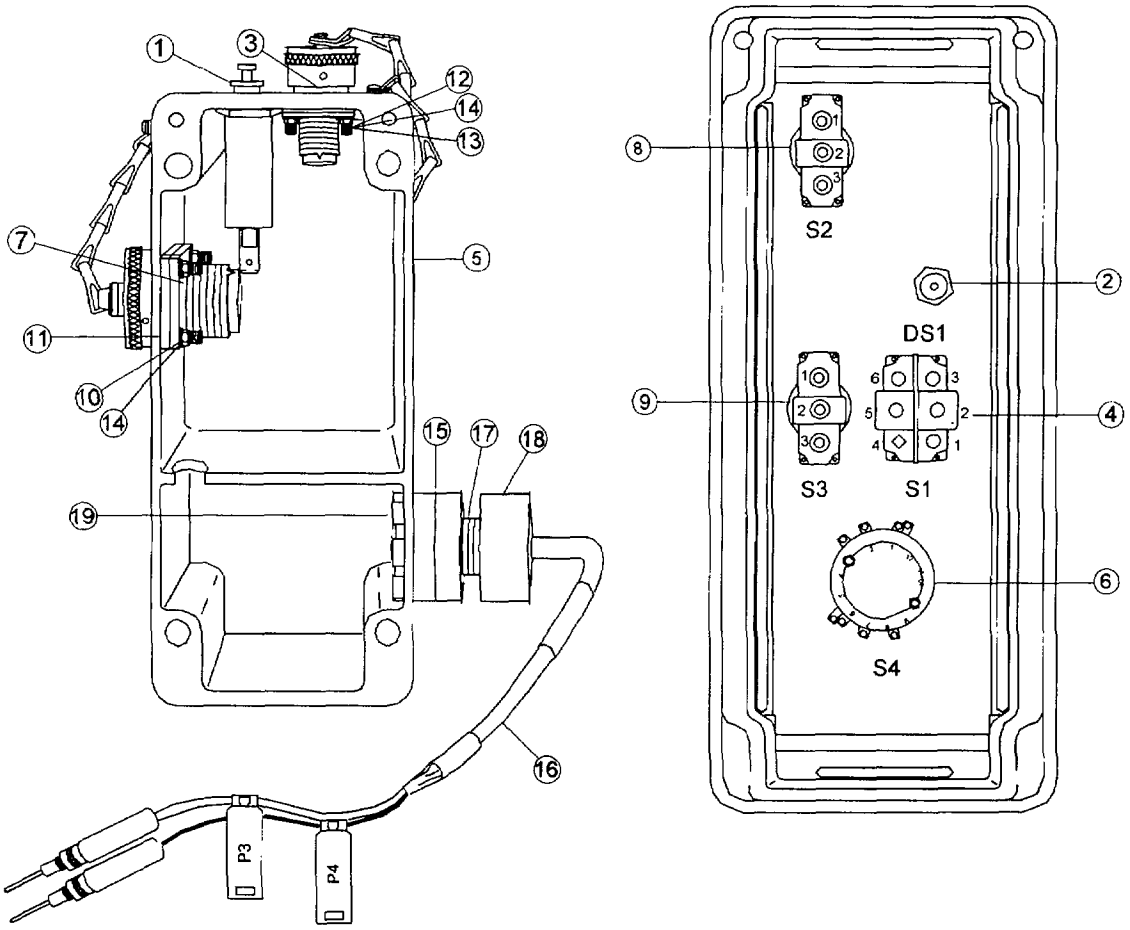

Figure 5.10. Selector Switch Assembly, Internal View

NOTE

REMOVE CB1 CIRCUIT BREAKER BEFORE REMOVING CONNECTORS J1 AND J2.

h. Replace Reset Button (Circuit Breaker) (CB1)

(1) Unscrew knurled lock nut and pull CB1 circuit breaker (1) (see Figure 5.10) from enclosure body (5).

(2) Remove wire assembly with connector clip from terminal 1 (running to port A of J1 receptacle connector (3)).

(3) Remove wire assembly with connector clip from terminal 2 (running to terminal 1 of S1 toggle switch (4)).

NOTE

ASSEMBLE TO BOX AFTER REPLACING CONNECTORS J1 AND J2.

(4) Install one wire running from port A of J1 receptacle connector (3) to terminal 1 of CB1 circuit breaker (1).

(5) Install one wire running from terminal 1 of S1 toggle switch (4) to terminal 2 of CB1 circuit breaker (1).

(6) Remove knurled lock nut from CB1 circuit breaker (1) and install CB1 circuit breaker through hole in enclosure body (5). Install knurled lock nut onto threads of CB1 circuit breaker (1). Tighten knurled nut against enclosure body (5).

i. Replace J2 Receptacle Connector

(1) Unsolder three black wires from S4 rotary switch (6) (see Figure 5.10) running to J2 receptacle connector (7):

(a) Wire from pole 1 on S4 rotary switch (6)(running to port A on J2 connector receptacle (7))

(b) Wire from pole 2 on S4 rotary switch (6)(running to port B on J2 connector receptacle (7))

(c) Wire from pole 3 on S4 rotary switch (6)(running to port C on J2 connector receptacle (7)).

(2) Remove two wires from terminal 5 of S1 toggle switch (4) (one running from port H and the other running from port F of J2 receptacle connector (7)).

(3) Remove one wire from terminal 1 of S2 toggle switch (8) (running from port G of J2 receptacle connector (7)).

(4) Remove one wire from terminal 1 of S3 toggle switch (9) (running from port E of J2 receptacle connector (7)).

(5) Using a 5/32nd deep well socket and 1/16 hex key, remove four socket head cap screws (10), four self-locking nuts (14), J2 receptacle connector (6) and gasket (11) from enclosure body (5).

(6) Install new gasket (11) onto receptacle connector (7).

(7) Solder three black wires running from J2 receptacle connector (7) to S4 rotary switch (6):

(a) Wire from port A on J2 receptacle connector (7) to pole 1 on S4 rotary switch (6).

(b) Wire from port B on J2 receptacle connector (7) to pole 2 on S4 rotary switch (6).

(c) Wire from port C on J2 receptacle connector (7) to pole 3 on S4 rotary switch (6).

(8) Install two wires on terminal 5 of S1 toggle switch (4) (one running from port H and the other running from port F of J2 receptacle connector (7)).

(9) Install one wire on terminal 1 of S2 toggle switch (8) (running from port G of J2 receptacle connector (7)).

(10) Install one wire from terminal 1 of S3 toggle switch (9) (running from port E of J2 receptacle connector (7)).

(11) Insert J2 receptacle connector (7) with gasket (11) into hole in enclosure body (5).

(12) Install four socket head cap screws (10) into holes in enclosure body (5) and through J2 receptacle connector (7).

(13) Install new four self-locking nuts (14) onto four socket head cap screws (10). Use a 1/16th hex key and a 5/32nd deep well socket to tighten nuts onto cap screws.

j. Replace J1 Receptacle Connector

(1) Remove one wire from terminal 4 of S1 toggle switch (4) (see Figure 5.10)(running from port B of J1 receptacle connector (3)).

(2) Remove one wire from terminal 1 of CB1 circuit breaker (1) (running from port A of J1 receptacle connector (3)).

(3) Using 5/32 deep well socket and 1/16 hex key, remove four socket head cap screws (13), four self-locking nuts (14), and J1 receptacle connector (3) and gasket (12) from enclosure body (5).

(4) Install gasket (12) onto J1 receptacle connector (3).

(5) Install one wire on terminal 1 of CB1 circuit breaker (1) (running from port A of J1 receptacle connector (3)).

(6) Install one wire on terminal 4 of S1 toggle switch (4)(running from port B of J1 receptacle connector (3)).

(7) Insert J1 receptacle connector (3) through hole in enclosure body (5).

(8) Insert four socket head cap screws (13) into holes in enclosure body (5) and through receptacle connector (3).

(9) Install new gasket (12), four new self-locking nuts (14) onto four socket head cap screws (13). Use 1/16 hex key and 5/32 deep well socket to tighten nuts onto cap screws.

k. Replace Cable and Stuffing Tube

NOTE

TO REMOVE CABLE ASSEMBLY FROM PLUG, REMOVE P3 AND P4 TAGS AND CONNECTOR.

(1) Unsolder two wires from pole 2 and lower pole 1 from S4 rotary switch (6) (see Figure 5.10).

(2) Unscrew stuffing tube tension nut (18).

(3) Remove cable assembly (16).

(4) Remove cable (16) from stuffing tube plug (17).

(5) Remove stuffing tube nut (15) from stuffing tube body (19) and remove stuffing tube body (19) from enclosure body (5).

(6) Insert disassembled stuffing tube body (19) through hole in enclosure body (5).

(7) Install stuffing tube nut (15) onto stuffing tube body (19) until it is tight against enclosure body (5).

(8) Insert cable assembly (16) through stuffing tube plug (17).

(9) Insert cable assembly (16) and stuffing tube plug (17) into stuffing tube body (19).

(10) Solder two wires from cable assembly to S4 rotary switch (6).

(a) Solder white wire of cable assembly (16) to pole 2 of S4 rotary switch (6).

(b) Solder black wire of cable assembly (16) to lower 1 pole on S4 rotary switch (6).

(11) Install and tighten tension nut (18) until cable is secure.

(12) Retag cable assembly with P3 and P4 tags.

Legend:

(1) Connector, Plug
(2) Cover, Plug
(3) Cable Assembly
(4) Connector, Plug

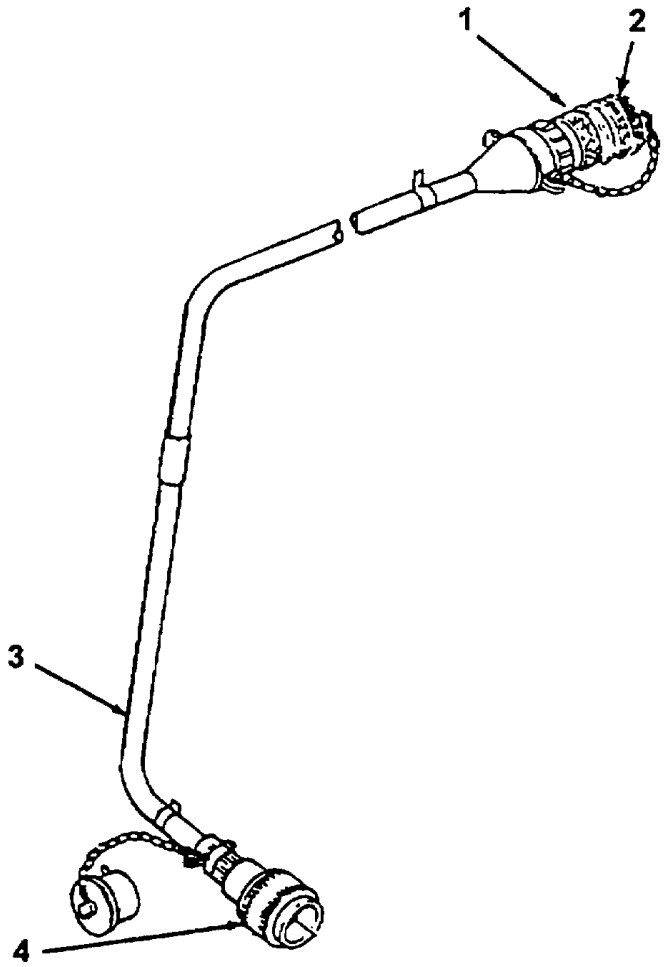

Figure 5.11. 75 Foot Cable Assembly

5.11 ELECTRICAL CABLE MAINTENANCE

a. This task covers: Electrical Cable Maintenance

b. Initial Setup

- **Tools**

  - General Mechanic's Tool Kit (Army NSN 5180-00-177-7033, Marine Corps NSN 5180-00-606-3566)
  - Multimeter
  - Soldering and Desoldering Set

- **Materials/Parts**
  - Solder (NSN 3439-00-555-4629)
  - Electrical Tape (NSN 5970-00-686-9153)
- **Equipment Conditions**
  - Cables clean and dry.
- **General Safety Conditions**
  - Protect hands from burns.
  - Avoid breathing solder fumes.

c. Electrical Cable No. 3. 75 Ft. Inspection

(1) Check the continuity of electrical cable no. 3 with the multimeter across the cable connectors C1 and C2.

NOTE

PROCEED BY TESTING PIN A OF C1 WITH A OF C2. CONTINUE TO TEST A OF C1 WITH THE OTHER PINS OF C2, I.E. A OF C1 WITH B OF C2 AND A OF C1 WITH C OF C2.

(2) Repeat procedure (1) with pins B, C and D of C1.

d. Electrical Cable No. 3. 75 Ft. Repair

(1) If wires are loose at the soldering points of C1 or C2 of Figure 5.11, resolder as necessary.

(2) If the safety switch assembly plug connector needs to be replaced or repaired, refer to paragraph 5.7.3.

NOTE

ENSURE THAT THE CORRECT WIRES ARE SOLDERED TO THE PROPER PINS, I.E. THE BLACK WIRE IS SOLDERED TO PIN A, THE WHITE WIRE IS SOLDERED TO PIN B AND THE GREEN WIRE IS SOLDERED TO PIN C.

e. Repair MOD 0/1 Selector Switch

(1) Replace Selector Switch.

(a) Unsolder wires from selector switch.

(b) Replace selector switch and solder wire ends to new switch (see Figure 5.7).

(2) Replace Selector Switch Wires.

(a) Unsolder wires from selector switch and connector C3.

(b) Replace wire with equal length of 18 AWG wire and solder wire ends to the selector switch and connector C3 (See Figure 5.6).

(3) Replace Connector C3.

(a) Unsolder wires from connector C3.

(b) Push wires through the hole for connector C3 and place connector gasket (16) over the wire ends.

(c) Solder wire ends to connector C3 (See Figure 5.6).

(d) Position replacement connector in switch box (2). Position large keyway toward the top of the box.

(e) Reattach connector C3 to the box with existing fasteners.

(4) Close the Selector Switch Box.

(a) Push cable assembly No. 2 and stuffing tube through the hole in the side of the selector switch box.

(b) Replace the stuffing tube 0 ring and secure the stuffing tube in place with the stuffing tube retaining nut.

(c) Make sure that the flat plastic washers are in place outside of the stuffing tube wire seal, and secure in place with the stuffing tube seal compression nut.

(d) Replace the switch in the top of the selector switch box. Make sure that the locator washer is placed on the switch shaft and the locator tap is positioned in the recessed hole located in side the top of the lid.

(e) Replace the retaining nut on the switch shaft. Recheck the locator tab on the inside of the cover after tightening the retaining nut.

(f) Position the knob on the switch shaft and tighten the setscrews.

(g) Replace the lid on the selector switch box. Position the switch cage on top of the lid.

(h) Secure the lid and cage with four machine screws.

(5) Check continuity. Rerun the continuity check on the selector switch box IAW para. 4.7c.

5.12 REPAIR HYDRAULIC CYLINDER

a. This task covers: Repair Hydraulic Cylinder

b. Initial Setup

- **Tools**

  - General Mechanic's Tool Kit (Army NSN 5180-00-177-7033, Marine Corps NSN 5180-00-606-3566)
  - Linear Actuating Cylinder Repair Tools (Figure G.4)

- **Materials/Parts**

  - Cleaning solvent
  - Cylinder seal kit (NSN 4320-00-135-0800)
  - Industrial goggles (NSN 4240-00-052-3776)
  - Plastic gloves (NSN 8030-00-763-4841)
  - Silicone compound (NSN 6850-00-927-9461)
  - Wiping rags (NSN 7920-00-205-1711)

- **Equipment Conditions**

  - Hydraulic cylinder removed (para 4.18)
  - Hydraulic system bled (para 4.9)

- **General Safety Instructions**

  - See warnings that follow.

WARNING

- **TO AVOID EYE INJURY, WEAR SAFETY GOGGLES WHEN WORKING WITH HYDRAULIC FLUID.**

- **DO NOT SMOKE OR PERMIT OPEN FLAMES NEAR SOLVENT. SOLVENT IS FLAMMABLE AND CAN CAUSE SEVERE BURNS.**

c. Repair Hydraulic Cylinder

(1) Clean and degrease cylinder (3) (see Figure 5.12) with cleaning solvent and wipe with rags.

(2) Remove traveling plug (2).

(3) Hold the spring hook in place. Remove machine screw (1).

(4) Reduce stake that was pinned on retaining nut (12) to minimize displacement.

(5) Remove retaining nut (12) with spanner wrench.

(6) Remove plunger (9) from cylinder (3).

(7) Inspect hook-end of spring (5) for damage.

NOTE

IF THERE IS NO APPARENT DAMAGE TO HOOK-END OF SPRING, PROCEED TO NEXT STEP. IF HOOK-END OF SPRING CANNOT BE REPAIRED, REPLACE ENTIRE CYLINDER.

(8) Remove retaining ring (6) from end of piston (9).

NOTE

IF TWO SEALS ARE PRESENT, REPLACE BOTH.

(9) Slide out U-cup (7).

(10) Replace with new U-cup (7), and retaining ring (6). Make sure open end of U-cup (7) faces spring hook.

(11) Lubricate all parts lightly with silicone compound lubricant.

(12) Install piston (9) into cylinder (3).

(13) Hold spring hook in place. Install machine screw (1) through hook-end of spring.

(14) Replace packing (13) in retaining nut (12) and install retaining nut (12) into top of cylinder (3). Stake in place.

(15) Reinstall traveling plug (2).

Legend:

(1) Screw
(2) Traveling Plug
(3) Cylinder
(4) Screw
(5) Spring
(6) Retaining Ring
(7) U-cup
(8) Brass Bushing
(9) Piston
(10) Washer
(11) Nut
(12) Retaining Nut
(13) Retaining Nut Packing

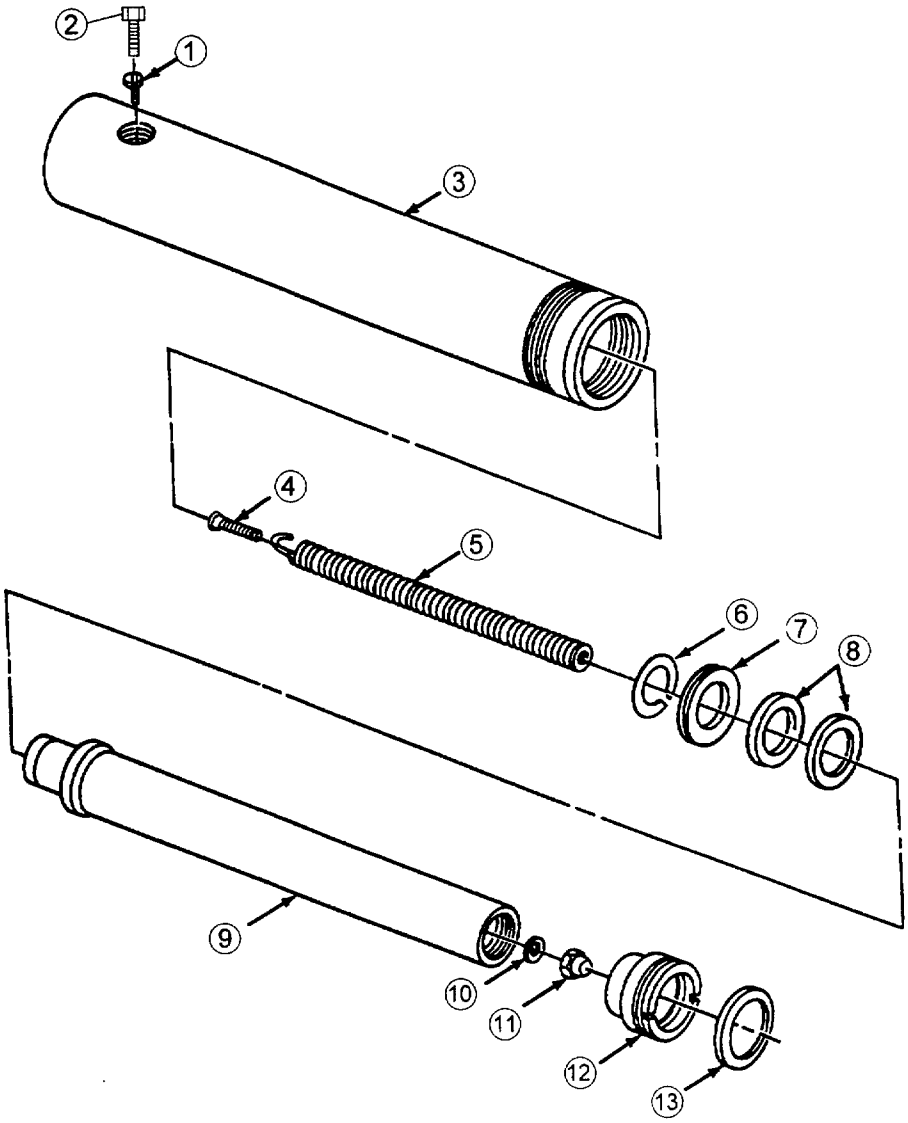

Figure 5.12. Repair Hydraulic Cylinder

5.13 REPAIR HYDRAULIC HAND PUMP

a. This task covers: Repair of Hydraulic Hand Pump

b. Initial Setup

- **Tools**

  - General Mechanic's Tool Kit (Army NSN 5180-00-177-7033, Marine Corps NSN 5180-00-606-3566)
  - Bench and pipe vise (NSN 5120-00-243-0110)
  - Retaining ring pliers (NSN 5120-00-089-0874)
  - Hydraulic Hand Pump Repair Tool (Figure G.1)

- **Materials/Parts**

  - Cleaning solvent (NSN 6810-00-184-4796)
  - Hand pump seal kit (NSN 4320-01-098-1703)
  - Industrial goggles (NSN 4240-00-052-3776)
  - Laboratory apron (NSN 8415-00-634-5023)
  - Plastic gloves (NSN 8030-00-763-4841)
  - Silicone compound (NSN 6850-00-927-9461)
  - Wiping rags (NSN 7920-00-205-1711)

- **Equipment Conditions**

  - Hydraulic hand pump removed (para 4-20)

- **General Safety Instructions**

  - See warnings that follow.

WARNING

- **TO AVOID EYE INJURY, WEAR SAFETY GOGGLES WHEN WORKING WITH HYDRAULIC FLUID.**

- **DO NOT SMOKE OR PERMIT OPEN FLAMES NEAR SOLVENT. MANY SOLVENTS ARE FLAMMABLE AND CAN CAUSE SEVERE BURNS.**

c. Repair Hydraulic Hand Pump

(1) Clean and degrease unit with solvent and wipe dry.

(2) Remove (unscrew) hand pump handle (1) (see Figure 5.13). Remove rubber boot.

(3) Unscrew rocker arm cap (2) from base (3) using adjustable pliers.

(4) Remove rocker arm (4), packing (5), and seat (6).

(5) Discard packing (5). Remove six capscrews (7) and lockwashers (8) using 7/16-inch socket wrench.

(6) Lift base (3) from reservoir (9).

(7) Remove gasket (10) and discard.

(8) Place base (3) in vise.

Legend:

(1) Handle
(2) Rocker Arm Cap
(3) Base
(4) Rocker Arm
(5) Packing
(6) Seat
(7) Capscrews
(8) Lockwashers
(9) Reservoir
(10) Gasket
(11) Retaining Ring
(12) Screen
(13) Oil Tube
(14) Relief Valve
(15) Gasket
(16) Nut, Packing
(17) Gasket
(18) Pump Piston
(19) Screw
(20) Lockwasher
(21) Pump Valve Lever
(22) Spindle
(23) Nut
(24) Packing
(25) Hex-Head Nut
(26) Dipstick Filler Plug
(27) Slotted Head Plug
(28) Gasket
(29) Spring
(30) Ball, Plug, Large
(31) Ball, Plug, Small
(32) Drain Plug

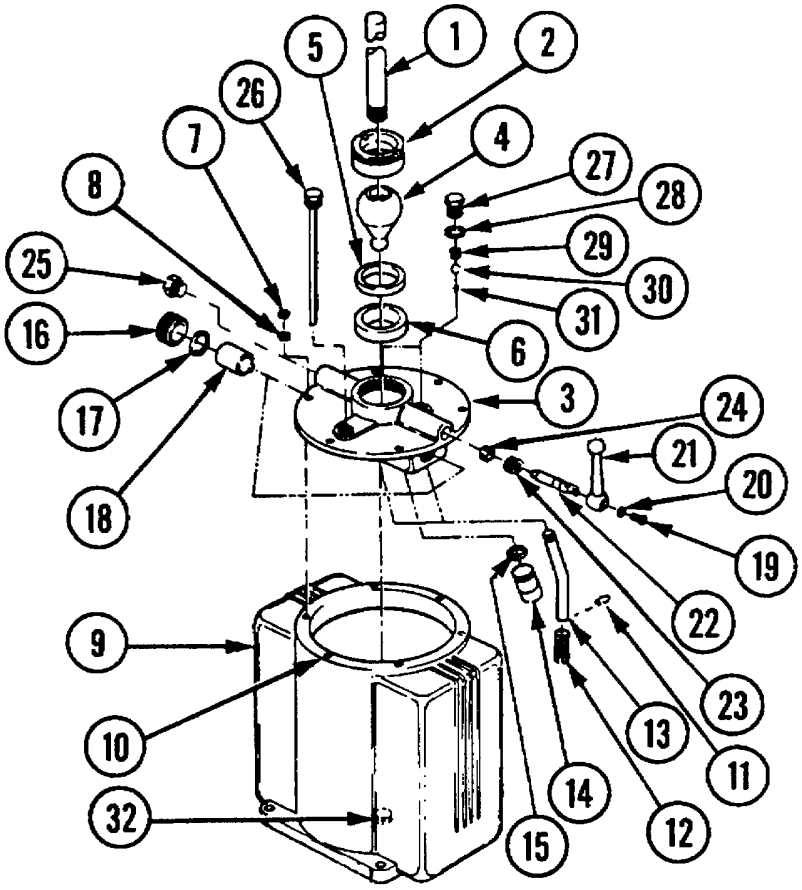

Figure 5.13. Repair Hydraulic Hand Pump

(9) Using retaining ring pliers, compress retaining ring (11) and remove.

(10) Remove screen (12) and oil tube (13).

(11) Wash screen (12) with solvent and dry. Assure there is no lint, etc., left in or on oil screen.

(12) Unscrew relief valve (14) and remove with gasket (15).

(13) Discard gasket (15).

(14) Remove packing nut (16), gasket (17), and pump piston (18) from each side of bottom of base (3).

(15) Discard gaskets (17).

(16) Using No. 1 flat-tip screwdriver, remove screw (19) with lockwasher (20).

(17) Remove pump valve lever (21) and spindle (22).

(18) Unscrew nut (23) with spanner and remove with packing (24).

(19) Discard packing (24).

(20) Using 9/16-inch combination box/open-end wrench, unscrew hex-head nut (25).

(21) Using 3/4-inch combination box/open-end wrench, unscrew filler plug with dipstick (26) and set aside.

(22) Using flat head screwdriver, remove plug (27) and remove gaskets (28), spring (29), large plug ball (30), and small plug ball (31).

(23) Discard gasket (28), spring (29), and plug balls (30, 31).

(24) Lubricate all seals with silicone compound.

(25) Replace new plug balls (30, 31), spring (29) and gasket (28) (see Figure 5.13).

(26) Using flat head screwdriver, screw in plug (27).

(27) Install new packing (24) into opening in base (3) and screw in nut (23).

(28) Position spindle (22) into nut (23) and slide pump valve lever (21) onto spindle.

(29) Secure pump valve lever (21) with lockwasher (20) and screw (19) using No. 1 flat-tip screwdriver.

(30) Install two pump piston (18), gaskets (17), and packing nuts (16) into housing below base (3).

(31) Install new gasket (15) and screw in relief valve (14).

(32) Insert oil tube (13), screen (12), and retaining ring (11) into underside of base (3).

(33) Remove base (3) from vise.

(34) Place new reservoir gasket (10) on base and lightly coat with hydraulic oil.

(35) Place base (3) on reservoir (9).

(36) Install six lockwashers (8) and capscrews (7), and tighten using 7/16-inch socket wrench.

(37) Using 9/16-inch combination box/open-end wrench, install hex-head nut (25).

(38) Install seat (6), new packing (5), and rocker arm (4).

(39) Install and tighten rocker arm cap (2) to fitting in base (3). If present, ensure that the drain plug (32) is tightly secured.

(40) Screw in filler plug with dipstick (26).

(41) Replace hand pump handle (1) and secure rubber boot.

(42) Refill with hydraulic fluid.

5.14 REPAIR HYDRAULIC CONTROL VALVE

a. This task covers: Repairing Hydraulic Control Valve

b. Initial Setup

· **Tools**

- General Mechanic's Tool Kit (Army NSN 5180-00-177-7033, Marine Corps NSN 5180-00-606-3566)
- Bench and pipe vise (NSN 5120-00-243-0110)
- Retaining ring pliers (NSN 5120-00-089-0874)

· **Materials/Parts**

- Cleaning solvent acetone (NSN 6810-00-184-4796)
- Graphite grease (NSN 9150-00-257-5370)
- Industrial goggles (NSN 4240-00-052-3776)
- Plastic gloves (NSN 8030-00-763-4841)
- Valve seal repair kit (NSN 5330-01-334-9879)
- Wiping rags (NSN 7920-00-205-1711)

· **Equipment Conditions**

- Hydraulic system bled (para 4-9)
- Hydraulic system prepared for replacement (para 4-17)
- Hydraulic control valve removed (para 4-21)

· **General Safety Instructions**

- See warnings that follow.

WARNING

· **TO AVOID EYE INJURY, WEAR SAFETY GOGGLES WHEN WORKING WITH HYDRAULIC FLUID.**

· **DO NOT SMOKE OR PERMIT OPEN FLAMES NEAR SOLVENT. MANY SOLVENTS ARE FLAMMABLE AND CAN CAUSE SEVERE BURNS.**

c. Repair Hydraulic Control Valve

(1) Clamp valve body (1) (see Figure 5.14) in vise. (Protect the valve body)

(2) Loosen four connection adaptors (2) on each side of the valve body (1) using a 15/16-inch combination box/open-end wrench.

(3) Remove valve body (1) from vise and unscrew all connection adaptors (2).

(4) Remove cup seals (3) and inner and outer 0-rings (4) and (5) from each valve part and discard.

(5) Remove retaining ring (6) and limit washer (7), and save for reinstallation.

(6) Unscrew locking cap (8) using spanner wrench at base of spindle (9) and remove O-ring (10) and discard.

(7) Remove ball (11) and spindle (9) from valve body (1) and save for reinstallation.

(8) Remove O-rings (12) and plastic split rings from base and top of spindle (9) and discard.

WARNING

DO NOT SMOKE OR PERMIT OPEN FLAMES NEAR SOLVENT. MANY SOLVENTS ARE FLAMMABLE AND CAN CAUSE SEVERE BURNS.

(9) Inspect all parts for damage, wash with solvent, and replace as necessary.

(10) Lubricate O-ring areas in spindle (9) (see Figure 5.14) and adaptors (2) with graphite compound.

(11) Install new 0-rings (12) and plastic split rings on spindle (9). (Make sure (O-rings are closest to ball (11).

(12) Place ball (11) and spindle (9) into valve body (1).

(13) Install new 0-ring (10) on locking cap (8).

(14) Install locking cap (8) into valve body (1).

(15) Install new O-rings (4) on four connection adaptors (2).

(16) Lubricate new cup seals (3) and 0-rings (4) and (5) with graphite grease.

(17) Install cup seals (3) into connection adaptors (2).

(18) Place valve body (1) in bench vise.

(19) Install all connector adaptors (2) into valve parts and tighten with 15/16-inch combination box/open-end wrench.

NOTE

TORQUE VALUES ARE NOT REQUIRED SINCE VALVE IS DESIGNED WITH BUILT-IN TOLERANCES FOR PROPER FUNCTIONING.

(20) Align limit washer (7) so that its tab is on the counterclockwise side of pin (13). Secure limit washer (7) and retaining ring (6) with retaining ring pliers.

(21) Remove valve body (1) from vise.

Legend:

(1)	Valve Body	(8)	Locking Cap
(2)	Adaptors	(9)	Spindle
(3)	Cup Seals	(10)	O-Ring
(4)	O-Rings	(11)	Ball
(5)	O-Rings	(12)	O-Ring
(6)	Retaining Ring	(13)	Limit Pin
(7)	Limit Washer		

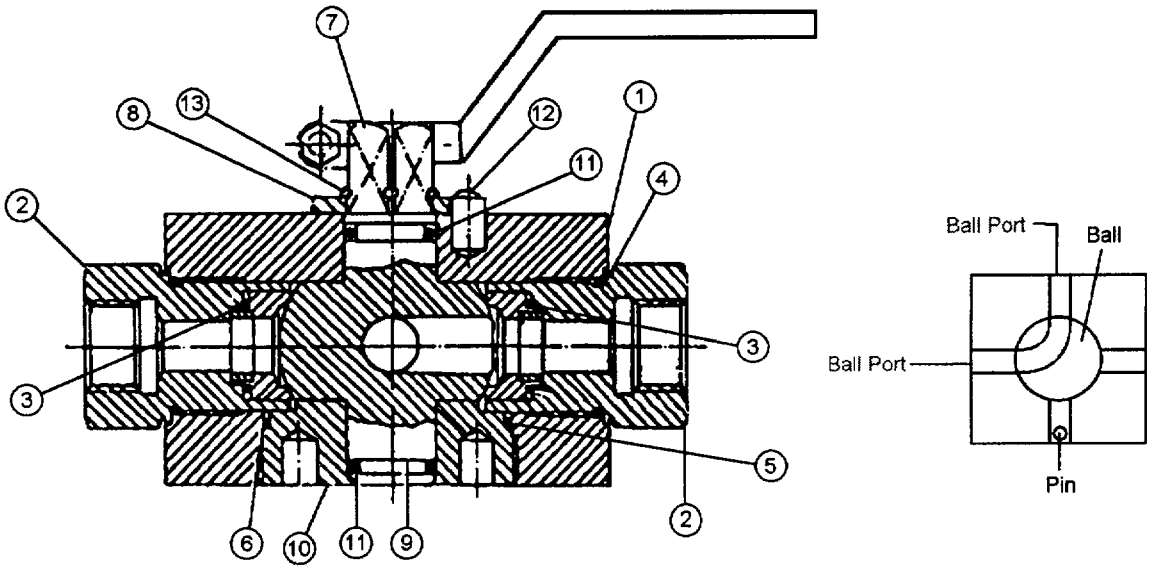

Figure 5.14. Repair Hydraulic Control Valve

5.15 CHARGING OF ACCUMULATOR.

a. <u>This task covers: Charging the accumulator</u>

b. <u>Initial Setup</u>

· **Tools**

- 15/16-inch open end wrench
- Hex Head Key (1/8 inch)

· **Materials/Parts**

- Extension, Schroeder valve, 5/16 NF 32
- Nitrogen tank charged to capacity above what Table 5.1 states
- Accumulator, Charging Device (NSN 4933-01-046-7109)

- **Equipment Conditions**

  - Accumulator which is attached to the hydraulic system must have pressure relieved (para 4-14), or the accumulator removed (para 4-19).

  - If a new accumulator is being serviced for installation, use the manufacturer's recommended charging procedures as indicated on the accumulator.

- **General Safety Instructions**

  - See warnings that follow.

- **References**

  - See paragraphs 4-17 and 4-19.

WARNING

EXPLOSIVE HAZARD POSSIBLE IF OXYGEN IS USED. NEVER USE OXYGEN TO CHARGE ACCUMULATOR. ACCUMULATOR MUST BE CHARGED WITH DRY NITROGEN.

c. Charging the Accumulator

(1) Remove setscrew (10) (see Figure 5.15) from cap nut (11) using a 1/8 inch hex head key.

(2) Remove cap nut (11) from accumulator (8) using 15/16-inch open end wrench.

(3) Remove cap (15) from nitrogen tank (3) and attach regulator assembly (14).

(4) Connect kit adapter (7) to accumulator stem (9), loosely.

(5) Connect hose (4) to pressure regulator (14) and pressure regulator (14) to tank valve (1).

(6) Slowly open valve (1) on nitrogen cylinder (3) until nitrogen starts to escape at the adapter (7), tighten adapter (7), this has purged the hose of air.

(7) Select desired pressure from Table 5.1.

(8) Close hose valve (5), open tank valve (1), adjust regulator left side gage to desired pressure by turning regulator T-handle (2).

(9) After desired pressure registers on the left side gage, open the hose valve (5) then screw T-handle on adapter (7) clockwise to begin flow to cylinder.

(10) Allow five minutes of undisturbed time for pressure to stabilize.

(11) Close adapter (7) T-handle (counterclockwise), close tank valve (1), open hose bleed valve (12) slowly to bleed hose and regulator assembly.

(12) After pressure bleeds off, remove adapter (7) from cylinder (8), remove regulator assembly (14) from nitrogen cylinder (3), and replace cap on cylinder (3).

Legend:

(1) Nitrogen Tank Valve
(2) Regulator T-Handle
(3) Nitrogen Tank
(4) Tank Hose
(5) Hose Valve
(6) Adaptor Hose
(7) Adaptor
(8) Accumulator
(9) Stem
(10) Setscrew
(11) Cap Nut
(12) Hose Bleed Valve
(13) Auxiliary Gage
(14) Regulator Assembly
(15) Cap, Tank

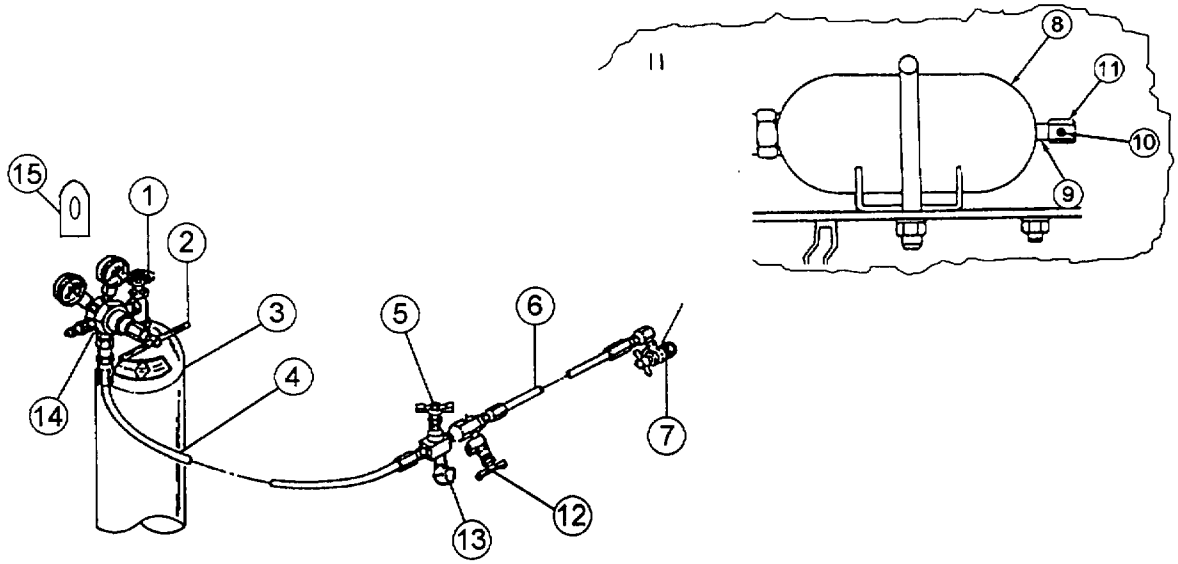

Figure 5.15. Charging the Accumulator

WARNING

TO AVOID EYE INJURY, WEAR SAFETY GOGGLES WHEN WORKING.

(13) Reconnect cap nut (11) and tighten setscrew (10).

(14) Close all valves on charging kit.

Table 5.1. Accumulator Pressurization (Pounds Per Square Inch)

Shop Temperature (F°)	Pressure Reading (psi)
120°	2,475
110°	2,430
100°	2,385
90°	2,340
80°	2,295
70°	2,250
60°	2,205
50°	2,160
40°	2,115
30°	2,070
20°	2,025
10°	1,980
0°	1,935

Section III. PREPARATION FOR STORAGE OR SHIPMENT

5.16 PREPARATION FOR ADMINISTRATIVE STORAGE

5.16.1 AUTHORIZATION AND READINESS. Installation or organization commanders may authorize administrative storage of their materiel IAW guidance furnished to MACOM commanders and AR 750-1. These storage requirements are needed to maintain the MICLIC in a maximum readiness condition. The MICLIC should be ready for use within the time factors as determined by the directing authority.

5.16.2 DEFINITION OF ADMINISTRATIVE STORAGE. Equipment can be placed in administrative storage for short periods of time when

a. An organization lacks operating funds, personnel, other resources, or normal use of its organic materiel.

b. Materiel exceeds the capability of the owning organization to operate or maintain and must be retained by that organization for contingency or other cogent reasons.

5.16.3 MAINTENANCE RECORDS. Keep appropriate records during the storage period.

5.16.4 PREPARATION FOR STORAGE

a. Except as indicated in the Maintenance Services and Inspection and Corrections of Shortcomings and Deficiencies paragraphs, personnel should be able to ready equipment for its mission within 24-hours or as otherwise prescribed by the approving authority.

b. Before placing equipment in administrative storage, perform PMCS as listed in chapter 2, correct shortcomings and deficiencies, and apply all Modification Work Orders (MWOs).

c. Report equipment in administrative storage in Materiel Readiness and Unit Readiness reports as prescribed for all reportable equipment. See AR 220-1.

d. DA PAM 738-750 prescribes the records and reports to be filled out to maintain the MICLIC in administrative storage.

5.16.5 SECURITY. These instructions do not modify security procedures and requirements for classified or pilferable items. See AR 190-13, DA PAM 738-750, and DA PAM 750-35.

5.16.6 STORAGE SITE

a. Select the best available site for administrative storage. Separate stored equipment from equipment in use. Conspicuously mark the area, "Administrative Storage."

b. Covered storage space is preferred.

c. Open sites should be hardstand, if available.

d. Unimproved sites should be firm, well drained, and free of excessive vegetation.

5.16.7 STORAGE PLAN

a. Give equipment maximum protection from the elements and provide access for inspection, maintenance, and exercise. Anticipate removal or deployment problems and take suitable precautions.

b. Take adequate precautions for all types and combinations of environmental conditions such as:

- Extreme heat or cold
- Blowing sand, dust, or loose debris
- Mud
- High humidity
- Soft ground
- Heavy snows

5.16.8 MAINTENANCE SERVICES AND INSPECTION. Before storing the MICLIC, perform both after operation PMCS and the next scheduled quarterly PMCS.

NOTE

MAKE SURE THAT PUMPING UNIT IS FULL OF HYDRAULIC FLUID.

5.16.9 AUXILIARY EQUIPMENT AND BASIC ISSUE ITEMS. Process auxiliary and basic issue items simultaneously with the system to which they are assigned. If possible, store auxiliary and basic issue items with the system. If stored apart from the system, mark auxiliary and basic issue items with tags indicating the system, its serial number and location, and store in protective type closures. In addition, place a tag or list indicating the location of the removed items in a conspicuous place on the system. Store the M34 Blasting Machine and the M51 Blasting Cap Test Set in a humidity-controlled, secure area.

5.16.10 CORRECTIONS OF SHORTCOMINGS AND DEFICIENCIES. Before placing equipment in administrative storage, correct shortcomings and deficiencies or obtain a deferment from the approving authority.

5.16.11 LUBRICATION. Lubricate equipment IAW lubrication instructions in PMCS. Retract hydraulic systems linkage and coat exposed portions of shafts with grease.

5.16.12 GENERAL CLEANING, PAINTING, AND PRESERVATION

CAUTION

DO NOT DIRECT WATER OR STREAM UNDER PRESSURE AGAINST UNSEALED ELECTRICAL SYSTEMS OR ANY EXTERIOR OPENING WHICH WILL DAMAGE A COMPONENT.

a. Clean dirt, grease, and other contaminants from equipment IAW this manual.

b. Remove rust and damaged paint by scraping, wire brushing, sanding, or buffing IAW Appendix K, CARC Painting. Spot paint, as required, per Appendix K and TM 9-0139, Painting Instructions for Field Use.

c. After cleaning and drying, immediately coat unpainted metal surfaces with an oil or grease, as appropriate.

d. Make sure launcher rail is in the stowed position.

e. Make sure all pins, caps, and covers are in place.

NOTE

AIR CIRCULATION UNDER DRAPED COVERS REDUCES DETERIORATION FROM MOISTURE AND HEAT.

f. Sunlight, heat, moisture (humidity), and dirt tend to accelerate deterioration. Install all covers authorized for the equipment. Close and secure all openings except those required for venting and draining. Seal openings to prevent the entry of rain, snow, or dust. Place equipment and provide blocking or framing to allow for ventilation and water drainage.

5.16.13 M155 LAUNCHER PACKAGING PROCESS FOR STORAGE OR SHIPMENT

a. Construct shipping skid IAW MIL-C-104C, Crates, Wood: Lumber and Plywood Sheathed, Nailed, and Bolted. See skid building materials list in Appendix G.7.

b. Place MICLIC frame in the center of shipping skid.

c. Block, brace and tie down IAW with blocking and bracing and tie down diagram.

d. Brace launcher rail in stored position IAW with blocking and bracing and tie down diagrams.

e. Wrap MICLIC frame IAW L-P-378E, Plastic Sheet and Strip, Polyolefin, Type 5, Class 3, Grade B, and Finish 1.

5.16.14 TRAILER PACKAGING PROCESS FOR STORAGE OR SHIPMENT. If the M155 launcher is to be stored or shipped with the M200A1 or M353 trailer, the launcher should remain on the trailer. TM 9-2330-205-14&P contains storage requirements for the M200A1 trailer and TM 9-2330-389-14&P contains storage requirements for the M353 trailer.

5.17 CARE OF EQUIPMENT IN ADMINISTRATIVE STORAGE

5.17.1 MAINTENANCE SERVICES. After equipment has been placed in administrative storage, suspend all regularly scheduled preventive maintenance services and inspect and exercise as specified herein. Do not reduce Prescribed Load List. See DA PAM 738-750 and DA PAM 730-35.

5.17.2 INSPECTION. Inspection will usually be visual and must consist of at least a walkaround examination of all equipment to observe any deficiencies that may have occurred. Inspect equipment in open storage weekly. Inspect equipment in covered storage monthly. After any severe storm or environmental change, inspect all equipment immediately. The following are examples of things to look for during visual inspection:

a. Leaks. Hydraulic fluid.

b. Condition of Preservatives, Seals, And Wraps. Seals may develop leaks during storage, during exercise, or shortly thereafter. If leaking continues, refer to maintenance procedures in this manual.

c. Corrosion or Other Deterioration.

d. Missing of Damaged Parts.

e. Water in Compartments.

f. Records. Record date of exercise on DA Form 2408-4.

g. Any Other Readily Recognizable Shortcomings or Deficiencies.

5.17.3 EXERCISING. Exercise equipment before administrative storage if schedule calls for exercising during administrative storage. Limit depreservation to removal of materials that will restrict exercising. Perform both after PMCS and the next scheduled quarterly PMCS. Take immediate actions to correct shortcomings and deficiencies noted during inspection. Note inspection and exercise results on DA Form 2404. Record and report maintenance actions on DA Form 2407. After exercising, restore the preservation to the original condition. Replenish hydraulic fluid as required.

5.17.4 ROTATION. To assure utilization of all assigned materiel, rotate items IAW any rotational plan that will keep equipment in an operational condition and reduce maintenance effort.

5.18 REMOVAL FROM ADMINISTRATIVE STORAGE

5.18.1 PREPARATION OF EQUIPMENT. Remove preservative materials. Perform the next scheduled PMCS and prepare equipment for service as outlined in this manual.

5.18.2 SERVICING. Resume the maintenance service schedule in effect at the beginning of storage as per DD Form 314. See DA PAM 738-750.

5.19 TRANSPORTATION OF MINE CLEARANCE LAUNCHER (MARINE CORPS ONLY)

CAUTION

ENSURE ROCKET MOTOR AND LINE CHARGE HAVE ADEQUATE PROTECTION DURING TRANSPORTATION. ASSURE LAUNCHER COMPONENTS WILL NOT BE DAMAGED, CONTAMINATED OR OTHERWISE DEGRADED SO THAT THE COMPONENTS BECOME EITHER DANGEROUS OR THEIR USEFULNESS IS IMPAIRED.

a. Ground Transportation

(1) Loading Line Charges on a Truck. Secure line charges to keep the line charges from shifting or moving during transit. Do not stack line charges more than two high.

(2) Line Charge Loaded on M353 Trailer. Line Charges that are mounted on the M353 Trailer should be towed by a tracked or wheeled vehicle with at least a 5-ton capacity. Observe the following procedures:

(a) Ensure line charge container is secured to the trailer.

(b) Do not make any electrical connections to the line charge container.

(c) Ensure landing wheels are up.

(d) Connect inter-vehicular hoses and electrical cables between host vehicle and trailer.

(e) Transport rocket motor in host vehicle and not on the launcher rail.

b. Helicopter Transportation (External)

WARNING

- **ENSURE THAT PROPER BONDING IS MADE BETWEEN THE MINE CLEARANCE LAUNCHER AND HELICOPTER TO PREVENT THE BUILD-UP OF STATIC ELECTRICITY.**

- **LINE CHARGE SHOULD NOT BE FUZED DURING HELICOPTER TRANSPORTATION.**

(1) Launcher and line charge must be attached to the trailer.

(2) Do not make any electrical connections to the line charge container.

(3) Lower the trailer's landing wheels. Insert and secure the landing wheel's lock pins.

(4) Secure brake hoses and electrical cables to the tongue of the trailer.

(5) Release the trailer's hand brake.

(6) The Mine Clearance Launcher will be rigged as a helicopter sling load by helicopter support team (HST) personnel only.

(7) Rocket Motors must be in shipping containers and not installed on the launcher rail or fastened to the trailer chassis.

(8) Lock launcher rail in the "down" position (0°).

(9) Do **NOT** pressurize the Hydraulic System.

(10) Secure all accessory equipment for flight.

(11) Use hard cover on line charge. Soft-cover to be stored in launcher storage container.

(12) Secure launcher storage container.

c. Aircraft (Fixed Wing) Transport

(1) Lower the trailer's landing wheels. Insert and secure the landing wheel's lock pins.

(2) Lock launcher rail in the "down" position (0°).

(3) Do **NOT** pressurize the Hydraulic System.

(4) Secure all accessory equipment for flight in the launcher storage container.

(5) Secure brake hoses and electrical cables to the tongue of the trailer.

(6) Do **NOT** make any electrical connections to the line charge container.

(7) If necessary the line charge container and trailer may be loaded separately.

(8) If line charge is loaded on the launcher, then the line charge must be attached to the trailer.

(9) Set the trailer's hand brake.

(10) Anchor trailer securely to aircraft cargo attachment points.

(11) Rocket Motors must be in shipping containers and not installed on the launcher rail or fastened to the trailer chassis.

(12) Ship the entire load as Class V explosives.

(13) Follow Air Force's loading procedures for air shipment.

d. Ship Transport

(1) Lower the trailer's landing wheels. Insert and secure the landing wheel's lock pins.

(2) Lock launcher rail in the "down" position (0°).

(3) Do **NOT** pressurize the Hydraulic System.

(4) Secure all accessory equipment in the launcher storage container.

(5) Secure brake hoses and electrical cables to the tongue of the trailer.

(6) Do **NOT** make any electrical connections to the line charge container.

(7) If necessary the charge container and trailer may be loaded separately.

(8) If line charge is loaded on the launcher, then the charge must be attached to the trailer.

(9) Set the trailer's hand brake.

(10) Anchor trailer securely.

(11) Rocket Motors must be in shipping containers and **NOT** installed on the launcher rail or fastened to the trailer chassis.

(12) Line charges and rocket motors will be handled as Class V explosives.

THIS PAGE INTENTIONALLY LEFT BLANK

CHAPTER 6
AMMUNITION MAINTENANCE

Section I. SERVICE UPON RECEIPT OF MATERIEL

6.1 SERVICE UPON RECEIPT OF MATERIEL. Upon receipt of the linear demolition charge and rocket motor, verify items against requisition list and determine whether items are serviceable. Table 6.1 provides ammunition information.

Table 6.1. Ammunition Information

DODIC	Model No.	Nomenclature	Fuze
M913	M58A3/M58A4	Charge, Demolition High Explosive (HE) Linear	M1134A1E1/ M1134A3/ M1134A3E1
J143	MK 22 MOD 3	Rocket Motor, 5 inch	Not applicable
J143	MK 22 MOD 4	Rocket Motor, 5 inch	Not applicable
M914	M68A2	Charge, Demolition Inert Linear	M1147 (Inert)
Care:	Keep linear demolition charge clean of dirt and grease.		
Handling:	Avoid radio frequency (rf) transmission near rocket motor and linear demolition charge; See RF note in Chapter 2(para. 2.7.5). Avoid excessive shock or excessively high temperatures.		
Preservation:	Do not remove banding and hard cover on charge container or open rocket motor box until ready to use or unless internal damage is suspected (see service upon receipt).		
Storage Temp Limits:	-60°F to + 160°F		
Firing Temp Limits:	-40°F to + 125°F		

6.1.1 INSPECTION. Verify nomenclature against requisition list. Inspect outer packaging of items for smeared or illegible marking or for penetration damage. Tables 6.3, 6.5, 6.8 and 6.9 give inspection criteria. Touch-up as described in para 6.3.1. If there is penetration damage to the outer packaging of the linear demolition charge container, forward to (Direct Support) Ammunition Maintenance area. Inspect outer packaging of rocket motor for excessive moisture. If there is penetration damage to the outer packaging of the rocket motor or if outer packaging is wet, unpack the rocket motor and inspect IAW Tables 6.6, 6.7, 6.8 and 6.9.

6.1.2 UNPACKING. Unpack ammunition items only prior to use or if internal damage is suspected. Unpack linear demolition charge by cutting steel straps on packing box and removing crating with strapping cutters. Use two personnel to lift and remove hard cover. Unpack rocket motor by cutting steel strapping on packaging and removing box cover along with polystyrene saddles. Use three personnel to lift the rocket motor by the motor tube and to lay it crosswise on the container for inspection.

6.1.3 REPACKING. Repack undamaged items IAW para 6.2.4 and 6.2.5.

6.1.4 OPERATOR/UNIT MAINTENANCE M58A3/A4 LINEAR DEMOLITION CHARGE INSPECTION. Use Table 6.2 to inspect the M58A3/A4 Linear Demolition Charge. If corrective action is not provided in the table, return the asset to the ASP.

Table 6.2. Operator/Unit Maintenance M58A3/A4 Linear Demolition Charge Inspection Criteria

Item No.	Inspection/Procedure	Asset Is Not Ready If:
1	**Container Exterior**	
	a. Check for evidence of exposure to standing water.	A water/mud line is visible on container.
	b. Check for damage to container, i.e., cracks, gouges, dents.	Damage, i.e., crack, gouge, dent, exposes linear demolition charge.
	c. Check receptacles on linear demolition charge junction box for damage, corrosion, missing pins.	Damage is so severe that electrical connectors could not be screwed on tightly, corrosion cannot be cleaned off, or receptacle pins are missing.
	d. Check receptacle No. 3 (bottom receptacle) for correct position of the detent.	Detent is not in the 12 o'clock position.
2	**Container Interior**	
	a. Check that fuze, packaged in center of linear demolition charge, is SAFE (Green S showing in Safe/Arm window).	RED or Armed showing in window. Notify EOD. Place fuze in holding area away from other explosives.
	b. Check that the fuze shear pin is present.	Shear pin is missing.
	c. Check that fuze holder is installed in the rear corner of container.	Fuze holder is missing.

Table 6.2. Operator/Unit Maintenance M58A3/A4 Linear Demolition Charge Inspection Criteria (Cont)

Item No.	Inspection/Procedure	Asset Is Not Ready If:
	d. Check that Cadmium powder is (white residue) present on or near fuze holder.	Cadmium is present on or near fuze holder. Clean IAW para 6.2.2.
	e. Check that the arresting cable snap hook is anchored to the container.	Arresting cable snap hook is not anchored to the container. Re-attach snap hook.
	f. ARMY only. Check that the fuze arming wire is woven into the arresting cable at the end of the nylon sock.	Arming wire is hose clamped to arresting cable.
	g. Check that linear charge is not saturated with water.	Linear demolition charge is saturated with water.
	h. Check that electrical wires under nylon sock are not secured to arresting cable with a hose clamp.	Electrical wire secured with hose clamp. Remove hose clamp. Tape electrical wires away from arming wire using masking tape. (See Figure 2.28)
	i. ARMY only. Check that electrical wires under nylon sock are not tangled or taped with the arming wire.	Electrical wire is tangled or taped with arming wire. Retape electrical wire away from arming wire using masking tape. (See Figure 2.28)
3	**Missing Components**	
	a. Check for fuze connector ball-lock pin.	Ball-lock pin is missing.
	b. Check rocket motor harness connector for nut and bolt.	Nut and bolt are missing

6.1.5 DIRECT SUPPORT/GENERAL SUPPORT/AMMUNITION SUPPLY POINT M58A3/A4 LINEAR DEMOLITION CHARGE INSPECTION. Use Tables 6.2 and 6.3 to inspect the M58A3/A4 Linear Demolition Charge. If corrective action is not provided in the table, reclassify the asset as unserviceable and return it to the depot.

Table 6.3. DS/GS/ASP M58A3/A4 Linear Demolition Charge Inspection Criteria

Item No.	Inspection/Procedure	Asset Is Not Ready If:
1	**Container Exterior**	
	a. Check for paint loss on container.	Areas on the container need paint. Touch-up the container.
	b. Check for smeared or legible markings.	Markings are illegible. Restore/reapply markings especially if lot number or nomenclature are illegible.
	c. Check for rust or corrosion.	The container is severely corroded. Clean off severe corrosion and touch-up with paint.
	d. Check for penetration damage to container.	Penetration damage exists which could snag the linear demolition charge or arresting cable during deployment or which would allow dirt, dust, debris or water to enter the container. Reclassify unserv and return to depot.
	e. Conduct continuity check of Junction Box Panel (see para 6.3.4).	
2	**Container Interior**	
	a. Check for moisture on linear demolition charge (nylon sleeve).	Asset is wet. Reclassify unserv and return to depot. Asset is damp. Leave hard cover off and allow to dry before repacking.
	b. Check that spare parts kit is taped to the interior wall of the container.	Spare parts kit is missing.
	c. Check that bungee straps are packed in center of linear demolition charge.	Bungee straps are missing.

6.1.6 OPERATOR/UNIT MAINTENANCE M68A2 INERT LINEAR DEMOLITION CHARGE INSPECTION.
Use Tables 6.4 to inspect the M68A2 Inert Linear Demolition Charge. If corrective action is not provided in the table, return the asset to the ASP.

Table 6.4. Operator/Unit Maintenance M68A2 Inert Linear Demolition Charge Inspection Criteria

Item No.	Inspection/Procedure	Asset Is Not Ready If:
1	**Container Exterior** a. Check receptacles on linear demolition charge junction box for damage, corrosion, missing pins.	Damage is so severe that electrical connectors could not be screwed on tightly or corrosion cannot be cleaned off or receptacle pins are missing.
	b. Check receptacle No. 3 (bottom receptacle) for correct position of the detent.	Detent is not in the 12 o'clock position.
2	**Container Interior** a. Check that fuze holder is installed in the rear corner of container.	Fuze holder is missing.
	b. Check that Cadmium powder (white residue) is present on or near fuze holder.	Cadmium is present on or near fuze holder. Clean IAW para 6.2.2.
	c. Check that the arresting cable snap hook is anchored to the container.	Arresting cable snap hook is not anchored to the container. Re-attach snap hook.
	d. Check that fuze arming wire connector has been reset (pushed in).	Fuze is armed. Depress pin on arming wire connector and push connector back into unarmed position.
	e. Check that electrical wires under nylon sock are not secured to arresting cable with a hose clamp.	Electrical wire secured with hose clamp. Remove hose clamp. Tape electrical wires away from arming wire using masking tape. (See Figure 2.14)
	f. ARMY only. Check that electrical wires under nylon sock are not tangled or taped with the arming wire.	Electrical wire is tangled or taped with arming wire. Retape electrical wire away from arming wire using masking tape. (See Figure 2.14)

6.1.7 DIRECT SUPPORT/GENERAL SUPPORT/AMMUNITION SUPPLY POINT M68A2 INERT LINEAR DEMOLITION CHARGE INSPECTION. Use Table 6.5 to inspect the M68A2 Inert Linear Demolition Charge. If corrective action is not provided in the table, return the asset to the depot.

Table 6.5. DS/GS/ASP M68A2 Inert Linear Demolition Charge Inspection Criteria

Item No.	Inspection/Procedure	Asset Is Not Ready If:
1	**Container Exterior**	
	a. Check for paint loss on container.	Areas on the container need paint. Touch-up the container.
	b. Check for smeared or illegible marking.	Markings are illegible. Restore/reapply markings especially if lot number or nomenclature are illegible.
	c. Check for rust or corrosion.	The container is severely corroded. Clean off severe corrosion and touch-up with paint.
	d. Check for penetration damage to container.	Penetration damage exists which could snag the linear demolition charge or arresting cable during deployment or which would allow dirt, dust, debris or water to enter the container. Reclassify unserv and return to depot.
	e. Conduct continuity check of Junction Box Panel (see para 6.3.4).	
2	**Container Interior**	
	a. Check for moisture on linear demolition charge (nylon sleeve).	Asset is wet. Reclassify unserv and return to depot. Asset is damp. Leave hard cover off and allow to dry before repacking.
	b. Check that spare parts kit is taped to the interior wall of the container.	Spare parts kit is missing.
	c. Check that bungee straps are packed in center of linear demolition charge.	Bungee straps are missing.

6.1.8 OPERATOR/UNIT MAINTENANCE MK 22 MOD 3 ROCKET MOTOR INSPECTION. Use Table 6.6 to inspect the MK 22 MOD 3 Rocket Motor. If corrective action is not provided in the table, return the asset to the ASP.

Table 6.6. Operator/Unit Maintenance MK 22 MOD 3 Rocket Motor Inspection Criteria.

Item No.	Inspection/Procedure	Asset Is Not Ready If:
1	**Retainer Screw** a. Check that the retainer screw is contained in the rocket motor package.	Retainer screw is missing.
	b. Check that the retainer screw is NOT screwed into the thrust neutralization plug.	Retainer screw is screwed into the thrust neutralization plug. Remove retainer screw.
2	**Electrical Lead.** Check that the electrical lead is not damaged, i.e., cut, smashed, crimped or pulled out of rocket motor.	Electrical lead is damaged.
3	**Button Lug Bands** a. Check that the button lug bands are present.	Button lug band is missing.
	b. Check that the button lug bands are not corroded.	Button lug bands are corroded. Corrosion cannot be cleaned and interferes with installation of rocket motor on launch rail.
4	**Cable Assembly.** Check that slack in cable assembly is approximately the same on both sides of rocket motor.	Slack is noticeably different (1.5 inches or greater) on one side compared to the other side. Return to ASP.
5	**Exterior Rocket Motor Body.** Check rocket motor body for dents and cracks.	If dent is greater than 1/8 inch or crack is visible, reject and return to ASP.

6.1.9 OPERATOR/UNIT MAINTENANCE MK 22 MOD 4 ROCKET MOTOR INSPECTION. Use Table 6.7 to inspect the MK 22 MOD 4 Rocket Motor. If corrective action is not provided in the table, return the asset to the ASP.

Table 6.7. Operator/Unit Maintenance MK 22 MOD 4 Rocket Motor Inspection Criteria

Item No.	Inspection/Procedure	Asset Is Not Ready If:
1	**Quick Release Pin** a. Check that the Quick Release Pin is attached to head cap. b. Check that the Quick Release Pin is NOT inserted into the thrust neutralization plug.	Quick Release Pin is missing. Quick Release Pin is inserted into the thrust neutralization plug. Remove ball-lock pin.
2	**Electrical Lead.** Check that the electrical lead is not damaged, i.e., cut, smashed, crimped or pulled out of rocket motor.	Electrical lead is damaged.
3	**Button Lug Bands** a. Check that two button lug bands are present. b. Check that the button lug bands are not corroded.	One or both button lug bands are missing. Button lug bands are corroded. Corrosion cannot be cleaned and interferes with installation of rocket motor on launch rail.
4	**Thrust Neutralization Plug.** Check that plug is secured to rocket motor with four nylon screws. **NOTE** **SCREWS MAY BE LOOSE. DO NOT ATTEMPT TO TIGHTEN THEM.**	One or more screws are missing.
5	**Exterior Rocket Motor Body.** Check rocket motor body for dents and cracks.	If dent is greater than 1/8" or crack is visible.

6.1.10 DIRECT SUPPORT/GENERAL SUPPORT/AMMUNITION SUPPLY POINT MK 22 MOD 3 ROCKET MOTOR INSPECTION. Use Tables 6.6 and 6.8 to inspect the MK 22 MOD 3 Rocket Motor. If corrective action is not provided, reclassify the asset as unserviceable and return it to the depot.

Table 6.8. DS/GS/ASP MK 22 MOD 3 Rocket Motor Inspection Criteria

Item No.	Inspection/Procedure	Asset Is Not Ready If:
1	**Exterior Packaging**	
	a. Check for smeared or illegible markings.	Markings are illegible. Restore/reapply markings especially if lot number or nomenclature is illegible.
	b. Check for moisture, dampness on outer pack. Unpack rocket motor and inspect for corrosion.	Rocket motor is corroded and outer pack is damp. Allow outer pack to dry before repacking.
	c. Check for penetration damage to outer pack.	Penetration damage exists. Unpack rocket motor and inspect for damage. Repair packaging box.
2	**Rocket Motor**	
	a. Check the rocket motor tube/body for dents, scratches.	Dents or scratches 1/8 inch or deeper are present.
	b. Check rocket motor for moisture.	The rocket motor is wet.
	c. Check rocket motor for corrosion.	Moderate or heavy corrosion exists.

6.1.11 DIRECT SUPPORT/GENERAL SUPPORT/AMMUNITION SUPPLY POINT MK 22 MOD 4 ROCKET MOTOR INSPECTION. Use Table 6.9 to inspect the MK 22 MOD 4 Rocket Motor. If corrective action is not provided, reclassify the asset as unserviceable and return it to the depot.

Table 6.9. DS/GS/ASP MK 22 MOD 4 Rocket Motor Inspection Criteria

Item No.	Inspection/Procedure	Asset Is Not Ready If:
1	**Exterior Packaging**	
	a. Check for smeared or illegible markings.	Markings are Illegible. Restore/reapply markings especially if lot number or nomenclature is illegible.
	b. Check for moisture, dampness on outer pack. Unpack rocket motor and inspect for corrosion.	Rocket motor is corroded and outer pack is damp. Allow outer pack to dry before repacking.
	c. Check for penetration damage to outer pack.	Penetration damage exists. Unpack rocket motor and inspect for damage. Repair packaging box.
2	**Rocket Motor**	
	a. Check the rocket motor tube/body for dents, scratches.	Dents or scratches 1/8 inch or deeper are present.
	b. Check rocket motor for moisture.	The rocket motor is wet.
	c. Check rocket motor for corrosion.	Moderate or heavy corrosion exists.

Section II. MAINTENANCE

6.2 OPERATOR/UNIT MAINTENANCE. Operator/Unit level maintenance consists mainly of inspection prior to use with some minor cleaning procedures. Cleaning responsibilities are limited to those in Tables 6.2, 6.4, 6.6 and 6.7. Operator/Unit level maintenance also consists of repacking field return assets.

6.2.1 REMOVING CORROSION FROM RECEPTACLES ON LINEAR DEMOLITION CHARGE JUNCTION BOX

a. This task covers: Cleaning and removing corrosion from the Linear Demolition Charge Junction Box Receptacles to ensure good electrical contact can be made during firing of the linear demolition charge.

b. Initial Setup

- **Materials/Parts**
  - Clean rags (NSN 7920-00-205-1711)
  - Denatured alcohol (NSN 6810-00-543-7415)

c. Service

(1) Remove protective caps from electrical receptacles on linear demolition charge junction box.

(2) Using a clean rag, wipe inside of receptacle to remove any dust, debris or moisture.

(3) Apply small amount of denatured alcohol to the rag and clean any corrosion off the pins.

WARNING

DENATURED ALCOHOL IS FLAMMABLE. KEEP AWAY FROM IGNITION SOURCES. USE IN WELL-VENTILATED AREA.

(4) Using a dry rag, wipe inside of protective cap and reinstall cap on the receptacle.

6.2.2 REMOVING CADMIUM POWDER RESIDUE FROM INTERIOR OF LINEAR DEMOLITION CHARGE CONTAINER

a. This task covers: Cleaning Cadmium Powder Residue off the Linear Demolition Charge Fuze Holder and Surrounding Area.

b. Initial Setup

· **Materials/Pats**

- Clean rags (NSN 7920-00-205-1711)
- Protective gloves (NSN 8030-00-763-4841)
- Water

- **General Safety Instructions**

CAUTION

· **ALL PERSONNEL INVOLVED IN THIS OPERATION, WHO ARE HANDLING THE LINEAR DEMOLITION CHARGE OR CLEANING THE RESIDUE, ARE REQUIRED TO WEAR PROTECTIVE GLOVES.**

· **DO NOT LET THE CADMIUM POWDER RESIDUE COME IN CONTACT WITH THE SKIN OR EYES. DO NOT INGEST THE RESIDUE.**

c. Service

NOTE

A WHITE POWDERY RESIDUE MAY BE PRESENT ON OR AROUND THE FUZE HOLDER LOCATED IN THE REAR CORNER OF THE LINEAR DEMOLITION CHARGE CONTAINER. THIS RESIDUE IS CADMIUM POWDER WHICH IS A HAZARDOUS SUBSTANCE AND SHOULD BE CLEANED FROM THE CONTAINER BEFORE USE.

(1) Using two personnel, fold back successive layers of linear demolition charge to gain better access to the fuze holder. Be sure to pull the first layer back as far as possible so each successive layer can be pulled back out of the way.

(2) With a damp rag, wipe the Cadmium powder from the fuze holder and container interior.

(3) Replace linear demolition charge layers back into the container.

(4) Place used rags and gloves in a plastic bag and dispose of as hazardous waste.

(5) At completion of operation, ensure operators wash hands with soap and water.

6.2.3 REMOVING CORROSION FROM ROCKET MOTOR BUTTON LUG BAND(S)

a. This task covers: Cleaning corrosion from the rocket motor button lug bands so the rocket motor can be installed on the launcher rail.

b. Initial Setup

- **Materials/Parts**
  - Non-sparking wire scratch brush (NSN 7920-00-255-5135)
- **Equipment Conditions**
  - Rocket motor packaging container on level ground. Rocket motor resting crosswise on container.
- **General Safety Instructions**
  - See warnings that follow.

WARNING

- **DO NOT SMOKE WITHIN 200 FT (61M) OF THE ROCKET MOTOR OR LINEAR DEMOLITION CHARGE.**
- **DO NOT OPERATE RF TRANSMITTERS NEAR ROCKET MOTOR OR LINEAR DEMOLITION CHARGE.**

c. Service

(1) Remove corrosion from button lug band(s) using copper wool or a non-sparking wire brush. Sandpaper may be used on properly grounded, sealed ammunition items.

(2) Wipe surface with clean dry rag to remove particles.

6.2.4 REPACKING OF FIELD-RETURNED ROCKET MOTOR

a. This task covers: Repacking of a misfired rocket motor or a rocket motor which was unpacked but not expended.

b. Initial Setup

- **Tools**
  - Wrench, 15 in., 2 each (In launcher storage box)
- **Materials/Parts**
  - Rocket Motor Barrier Bag
  - Rocket Motor Shipping Box and packing
  - Stencil, ink, black (NSN 7510-00-164-0811)
  - Stencil brush or roller plate (NSN 7520-00-223-8000)
- **General Safety Instructions**
  - See warnings that follow.

WARNING

- **ELECTRICAL CONNECTIONS MUST BE DETACHED FROM BLASTING MACHINE, ROCKET MOTOR AND LINEAR DEMOLITION CHARGE CONTAINER.**
- **DO NOT SMOKE WITHIN 200 FT (61M) OF ROCKET MOTOR OR LINEAR DEMOLITION CHARGE.**
- **DO NOT OPERATE RF TRANSMITTERS NEAR ROCKET MOTOR OR LINEAR DEMOLITION CHARGE.**
- **ENSURE PROTECTIVE CAP IS INSTALLED ON ROCKET MOTOR ELECTRICAL CONNECTOR AND THAT RETAINER SCREW OR QUICK RELEASE PIN IS REMOVED FROM HEAD OF ROCKET MOTOR.**

NOTE

- **AMMUNITION COMPANIES ARE RESPONSIBLE FOR PROVIDING TECHNICAL ASSISTANCE TO USING UNITS AND RECEIVING PACKAGING MATERIAL (OF EXPENDED AMMUNITION) RETURNED FROM UNITS.**
- **THIS OPERATION REQUIRES THREE PERSONS.**

c. Service

(1) Ensure that retainer screw or quick release pin has been removed from head cap of rocket motor (1) (see Figure 6.1) and rocket motor electrical connector (2) has been disconnected from receptacle No. 3.

(2) Raise launcher rail so that rocket is approximately horizontal but free of contact with charge.

(3) Loosen all hand knobs (3) on launcher rail. Crosspieces should rotate to free rocket from side restraint.

(4) Pull open nylon cover (4) and lay back flaps onto charge.

(5) Using two wrenches, disconnect bridle cable (5) from linear demolition charge. Secure nut and bolt together in rocket motor harness connector. Then remove bridle cable from bridle cable sheaths.

(6) Pull down on rocket release mechanism handle (6) and hold.

(7) Slide rocket forward until it is free of restraints.

(8) Slowly release handle and slide rocket off launcher.

(9) Place rocket motor inside barrier bag.

(10) Fold top of bag to side and insert rocket (in barrier bag) into packing box.

(11) Install end pieces of polystyrene in box.

(12) Fold bridle cable (5) over top of rocket in box.

(13) Replace box cover, with polystyrene saddles attached, and secure cover.

(14) Clearly mark outer packaging by stenciling the words, “RETURNED FROM FIELD" or "MISFIRED ROCKET MOTOR," as applicable, in white ink.

(15) Forward packaged rocket motor to the ASP for disposition.

Legend:

(1) Rocket Motor Head Cap
(2) Electrical Connector
(3) Hand Knobs
(4) Nylon Cover
(5) Bridle Cable
(6) Rocket Release Mechanism

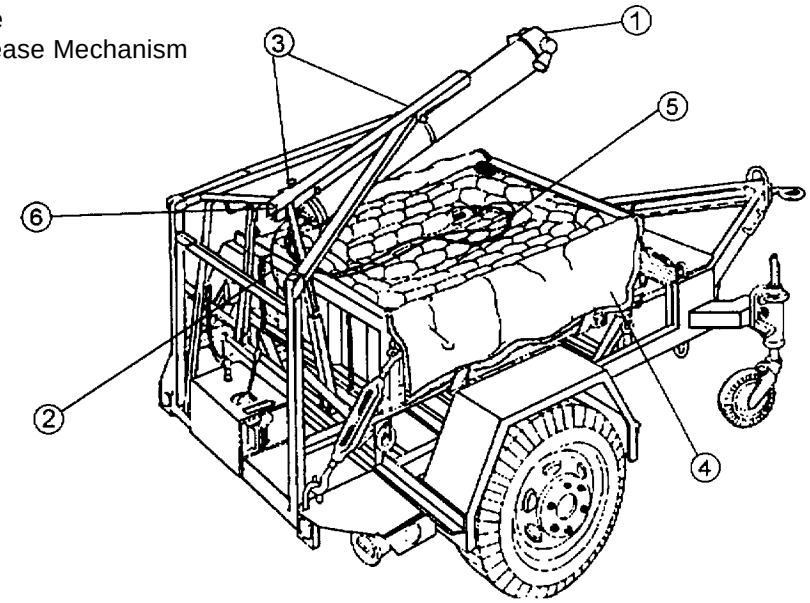

Figure 6.1. Repacking Field-Returned Rocket Motor

6.2.5 REPACKING OF FIELD-RETURNED LINEAR DEMOLITION CHARGE

a. This task covers: Repacking of an unpacked but unexpended linear demolition charge.

b. Initial Setup

- **Materials/Parts**

  - Fuze barrier bag
  - Fuze packing box
  - Bungee Straps
  - Hard Cover
  - Spare Parts Kit (Shorting plug(s))
  - Plastic bag
  - Rag (NSN 7920-00-205-1711)
  - Tape (NSN 5620-00-103-2254)

- **General Safety Instructions**

  - See warnings that follow.

WARNING

- **KEEP DETONATOR END OF FUZE POINTED AWAY FROM PERSONNEL AND CHARGE.**
- **MAKE SURE ELECTRICAL CONNECTIONS ARE DETACHED FROM BLASTING MACHINE, ROCKET MOTOR AND LINEAR DEMOLITION CHARGE CONTAINER.**
- **DO NOT SMOKE WITHIN 200 FT (61M) OF ROCKET MOTOR OR LINEAR DEMOLITION CHARGE.**
- **DO NOT OPERATE RF TRANSMITTERS NEAR ROCKET MOTOR OR LINEAR DEMOLITION CHARGE.**

c. Service.

(1) Raise launcher rail (1) (see Figure 6.2) to 20°.

(2) Remove protective nylon cover (2) and its shock cord assemblies. Fold and replace in launcher storage container (3).

Legend:

(1) Launcher Rail
(2) Nylon Cover
(3) Storage Container

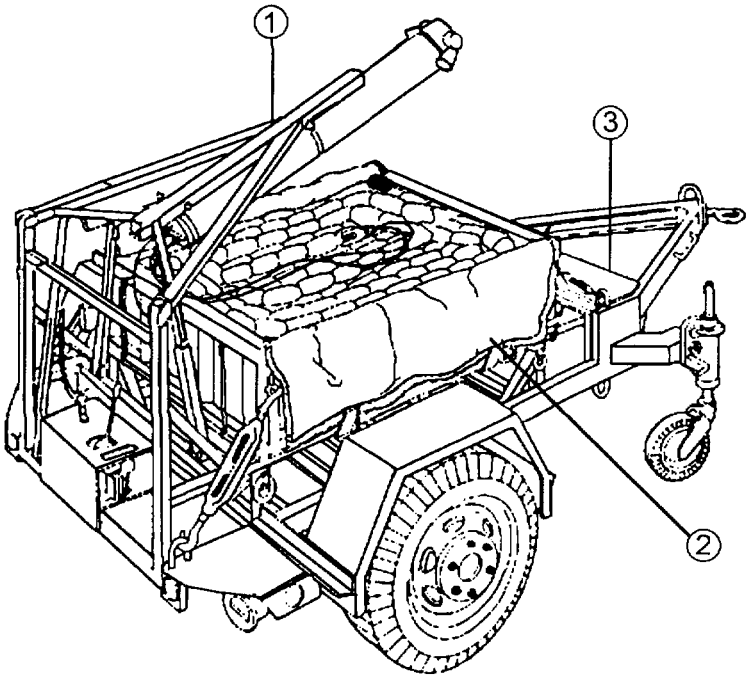

Figure 6.2. Repacking Field-Returned Linear Demolition Charge

(3) Using two personnel, fold back successive layers of linear demolition charge to gain access to the fuze. Be sure to pull the first layer back as far as possible so each successive layer can be pulled back out of the way.

(4) Pull the fuze from the fuze holder. Ensure fuze is not armed: a green S (Safe) should be showing in the Safe/Arm window. If fuze is armed, notify EOD.

(5) Remove the ball-lock pin (1) (see Figure 6.3).

(6) Slide the linear demolition charge fuze connector (2) off the fuze connector (rear half) (3).

(7) Replace ball-lock pin (1) into fuze connector, rear half (3).

(8) Unscrew and remove the electrical connector (4) and arming wire connector (5) from the fuze (6).

(9) Wipe off fuze (6) if dirty or wet and return to fuze barrier bag. Seal the bag with tape and put the fuze (in barrier bag) in box.

(10) Reposition charge to original configuration and place boxed fuze in middle of linear demolition charge. Place shorting plug(s) and bungee straps in plastic bag and place in middle of linear demolition charge.

(11) Place hard cover on linear demolition charge container and forward to ASP for disposition.

Legend:

(1) Ball-Lock Pin
(2) Fuze Connector (Front Half)
(3) Fuze Connector (Rear Half)
(4) Electrical Connector
(5) Arming Wire Connector
(6) Fuze

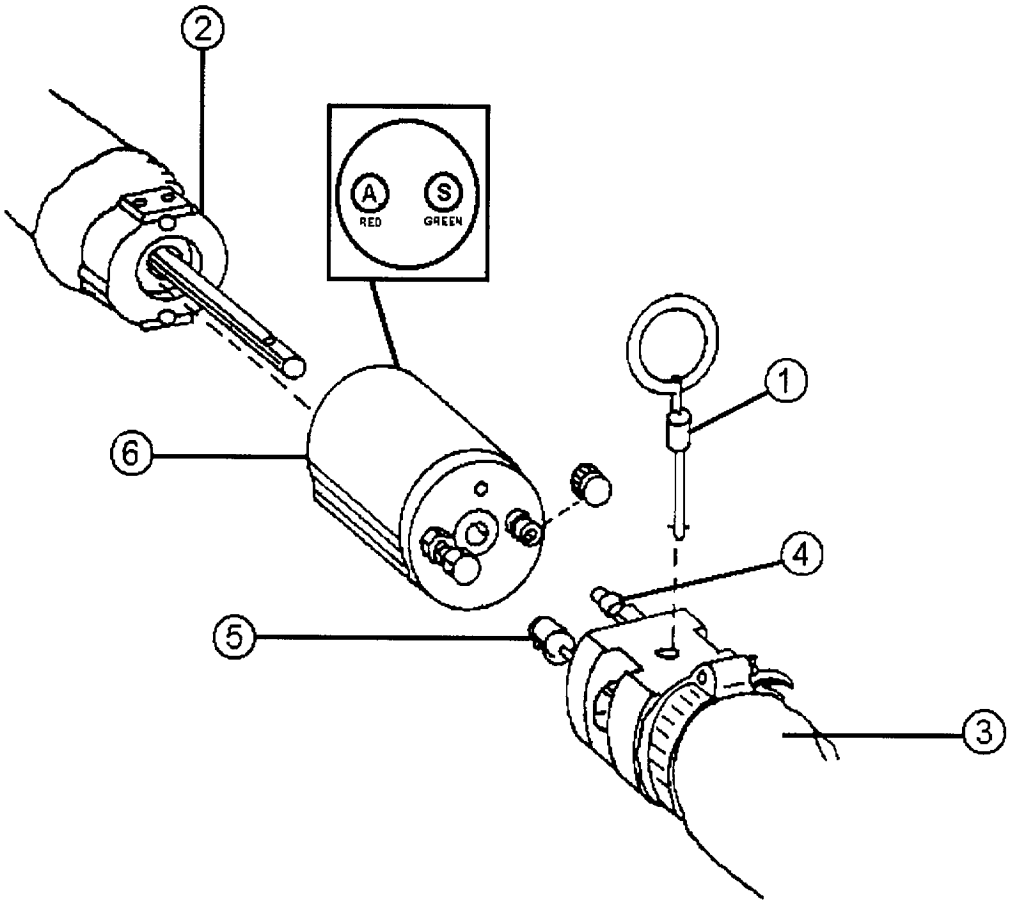

Figure 6.3. Remove Fuze from Line Charge Connector

6.3 DIRECT SUPPORT/AMMUNITION SUPPLY POINT MAINTENANCE. Includes but is not limited to removing corrosion, repairing boxes/containers, touching-up paint and remarking. Perform Direct Support/General Support/Ammunition Supply Point Maintenance on items under the following conditions:

a. When care and preservation are required to ensure serviceability over a longer period.

b. When operator and/or maintenance requests you to inspect suspected unserviceable ammunition or to perform maintenance to return items to serviceable condition.

c. When maintenance is required to correct deficiencies in suspended ammunition lots.

d. When ammunition is to be inspected upon receipt at ammunition supply points.

6.3.1 REMOVING CORROSION FROM LINEAR DEMOLITION CHARGE CONTAINER

a. This task covers: Removing corrosion from the linear demolition charge container and applying touch-up paint.

b. Initial Setup

- **Materials/Pats**

  - Abrasive paper (NSN 5350-00-271-5950)
  - Brush, paint (Appendix E, Items 4 thru 10)
  - Face shield (or industrial goggles)(NSN 4240-00-052-3776)
  - Flammable waste can (NSN 7420-00-282-4811)
  - Laboratory apron (NSN 8415-00-634-5023)
  - Olive drab No. 34087 (NSN 8010-00-878-5117) or
  - Blue No. 35109 (NSN 8010-00-297-2119)
  - Non-sparking wire scratch brush (NSN 7920-00-255-5135)
  - Paint, Enamel, MIL-E-5328 or TT-E-516 (NSN 8010-00-878-5761)
  - Plastic gloves (NSN 8020-00-763-4841)
  - Respirator (NSN 4240-01-246-0314)
  - Rust, arresting coating primer (NSN 8030-00-145-0084)
  - Wiping rags (NSN 7920-00-205-1711)

- **Equipment Conditions**

  - Container on ground. Lid secured onto container with steel banding.

- **General Safety Instructions**
  - See warnings that follow.

WARNING

· **WEAR FACE SHIELD OR SAFETY GOGGLES WHEN USING WIRE BRUSH AND CHEMICALS.**

· **WEAR RESPIRATOR WHEN SPRAYING PRIMER OR PAINT.**

c. Service

CAUTION

MAKE SURE ALL PROTECTIVE CAPS ARE INSTALLED ON ELECTRICAL RECEPTACLES BEFORE UNDERTAKING THIS OPERATION.

(1) Wipe all surfaces of linear demolition charge container with rags and denatured alcohol to remove grease and oil.

(2) Remove all corrosion and loose paint from the linear demolition charge container using copper wool or a non-sparking wire brush. Sandpaper may be used on non-ammunition items and on properly grounded, sealed ammunition items. Sandpaper must not be used on items where explosive is exposed. Follow up with clean dry rag to remove particles.

WARNING

· **ALWAYS WEAR SAFETY GOGGLES WHEN MIXING PAINTS, HANDLING SOLVENTS AND SPRAYING PAINTS. WEAR THE PROPER RESPIRATOR WHEN SPRAYING PAINT (EVEN FROM A SPRAY CAN AS IN THIS OPERATION) OR IF MORE THAN A QUART OF PAINT WILL BE BRUSHED.**

· **PERSONS SENSITIVE TO THE SOLVENTS USED IN PRIMERS OR PAINTS SHOULD WEAR RUBBER OR PLASTIC GLOVES.**

NOTE

THE FOLLOWING APPLIES TO CHARGE CONTAINERS WITH STANDARD ENAMEL PAINT. FOR NEW GENERATION CONTAINERS WITH CARC PAINT, REFER TO (APPENDIX H). THERE ARE A LOT MORE PRECAUTIONS NECESSARY WITH CARC.

(3) Shake spray can or mix primer and paint IAW instructions on cans.

(4) Apply a light coat of primer to any areas of bare metal more than just a scratch in extent. Feather the primer into the surrounding good paint.

(5) After primer has dried, apply a coat of enamel to primed areas and other necessary areas feathering the new paint into the old.

6.3.2 REAPPLYING MARKINGS TO LINEAR DEMOLITION CHARGE CONTAINER OR ROCKET MOTOR PACKAGING BOX

a. This task covers: Restoring all improper, smeared or illegible markings on outer packaging of the M58A3/A4 Linear Demolition Charge and M68A2 Inert Linear Demolition Charge and the MK 22 MOD 3/MOD 4 Rocket Motor.

b. Initial Setup

- **Materials/Parts**

  - Rags (NSN 7920-00-205-1711)
  - Stencil brush or roller plate (NSN 7520-00-223-8000)
  - Stencil ink (black)(NSN 7510-00-161-0811)
  - Stencil ink (white)(NSN 7510-00-161-0815)
  - Stencil ink (yellow)(NSN 7510-00-161-0816)

- **General Safety Instructions**

  - See warning that follows.

WARNING

WEAR SAFETY GOGGLES WHEN USING SPRAY CAN OF PAINT.

c. Service.

(1) For specific markings and location of markings, refer to Figures 6.4, 6.6 and 6.7. Stencil United Nations (UN) Markings below Department of Transportation (DOT) Markings. Unless otherwise noted, all figures are 0.88 to 1.12 inches high (2.23 cm to 2.84 cm).

NOTE

PAINT IN THE APPROPRIATE COLOR MAY BE SUBSTITUTED FOR INK, IF NECESSARY.

(2) Cut or assemble a stencil to provide required lettering.

(3) Apply small dab of ink to ink plate or shake spray can.

(4) Rub brush in ink to apply ink to bristles or roll roller back and fourth to apply thin coat of ink to it.

(5) Position stencil over location on items to receive marking.

(6) While holding stencil firmly against item, rub bristles or bush over stencil, roll roller over stencil or use spray can to apply an even coat of ink through stencil openings.

(7) Remove stencil.

(8) Check markings. Ensure markings are correct, neat and legible.

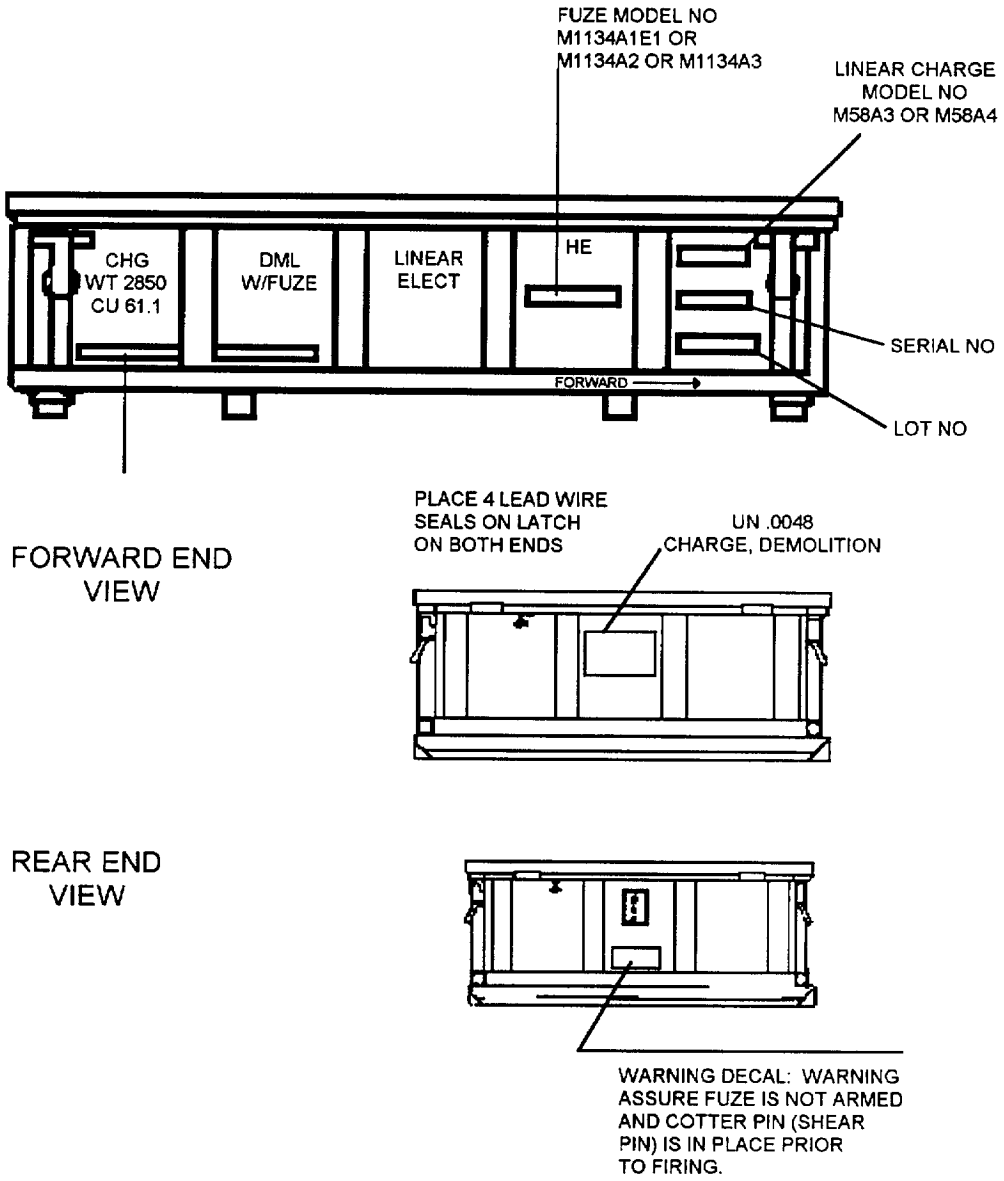

Figure 6.4. HE Linear Charge Container Markings

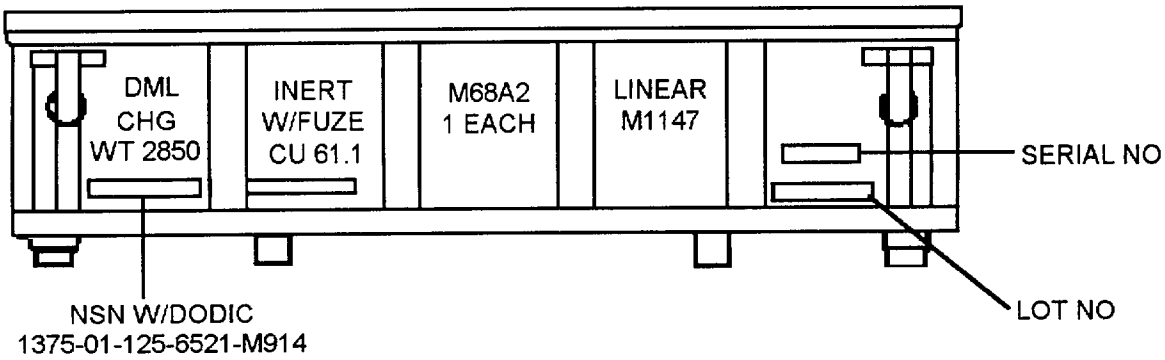

Figure 6.5. Inert Linear Charge Container Markings

WARNING

INSTALL PIN PRIOR TO USE. REMOVE PIN PRIOR TO STORAGE.

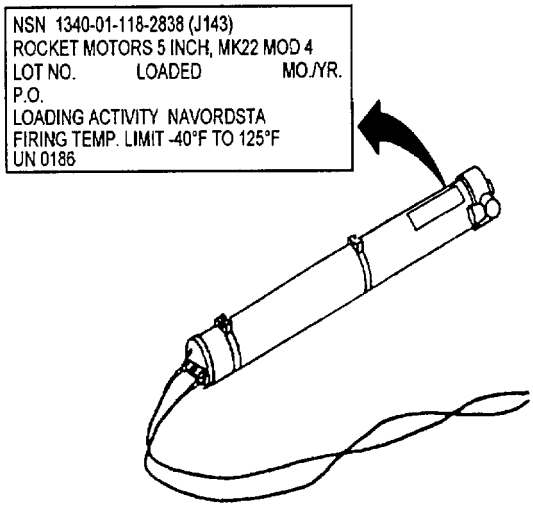

Figure 6.6. Marking for Rocket Motor

6.3.3 ROCKET MOTOR PACKING BOX INSPECTION AND RECONDITIONING

a. This task covers: Inspection and remarking of the rocket motor packing box.

b. Initial Setup

· **Materials/Parts**

- Enamel (black) (NSN 8010-00-297-2122)
- Enamel (white) (NSN 8010-00-878-5761)
- Industrial goggles or face shield (NSN 4240-00-052-3776)
- Marking ink TT-I-1795 (black)(NSN 7510-00-161-0811)
- Respirator (NSN 4240-01-246-0314)

· **Equipment Conditions**

- Rocket motor container on level ground.

· **General Safety Instructions**

- See warnings that follow.

WARNING

TO PREVENT EYE DAMAGE AND LUNG DAMAGE, VENTILATE ROOM AND WEAR RESPIRATOR WHEN USING PAINT.

c. Service

(1) Receive packing box from unpacking operation.

(2) Examine box and repair, recondition and accept or reject as prescribed in TM 9-1375-213-12&P.

(3) If box requires remarking, cover bad markings with white paint and allow to dry. For specific markings and location of markings, refer to Figure 6.7. Cut stencil giving nomenclature, contract number, lot number, gross weight and cube. Position stencil and mark as in para 6.3.2. Check markings for legibility after removing stencil.

(4) Transfer accepted packing box to packing operation. If rejected, mark and place in reject area pending disposal.

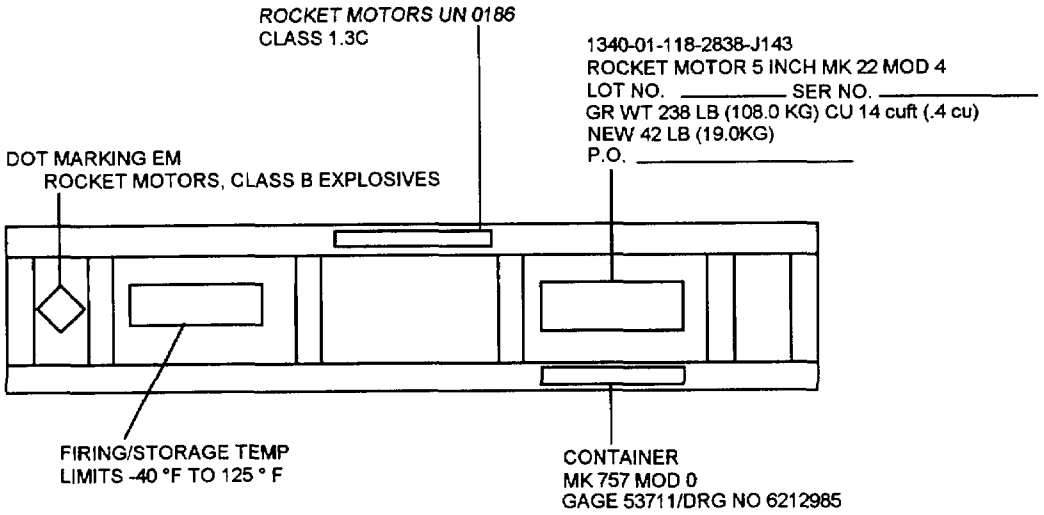

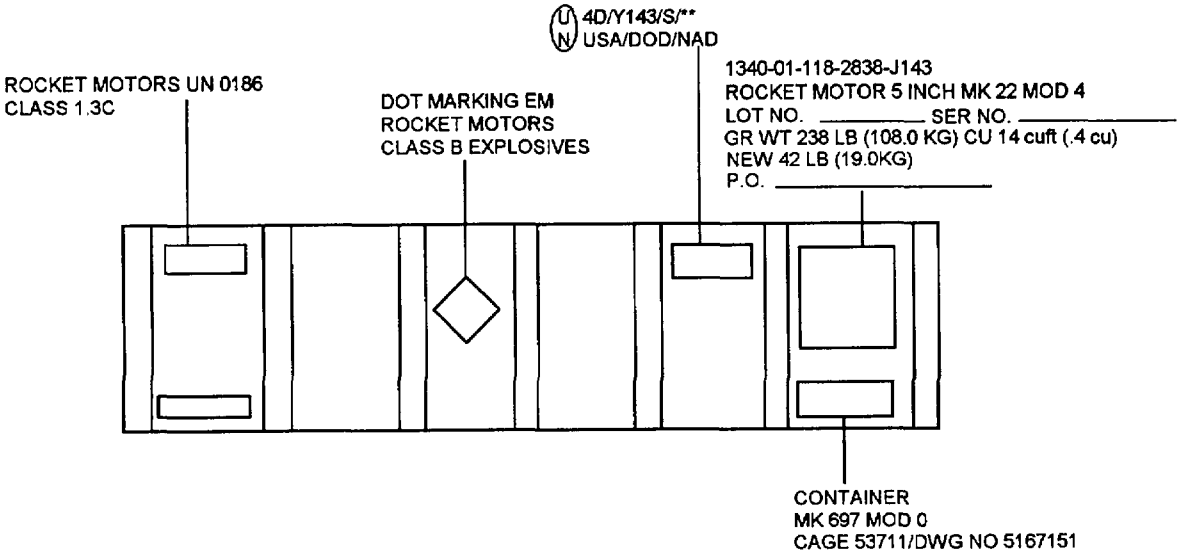

Figure 6.7. MK 22 MOD 4 Rocket Motor Container Markings

6.3.4 JUNCTION BOX Check continuity of the junction box upon initial receipt of the M58A4 (HE) or M68A2 (Training) linear charge. During assembly the electrical wiring can be crushed causing a short in the linear charge.

6.3.4.1 Linear Charge Junction Panel

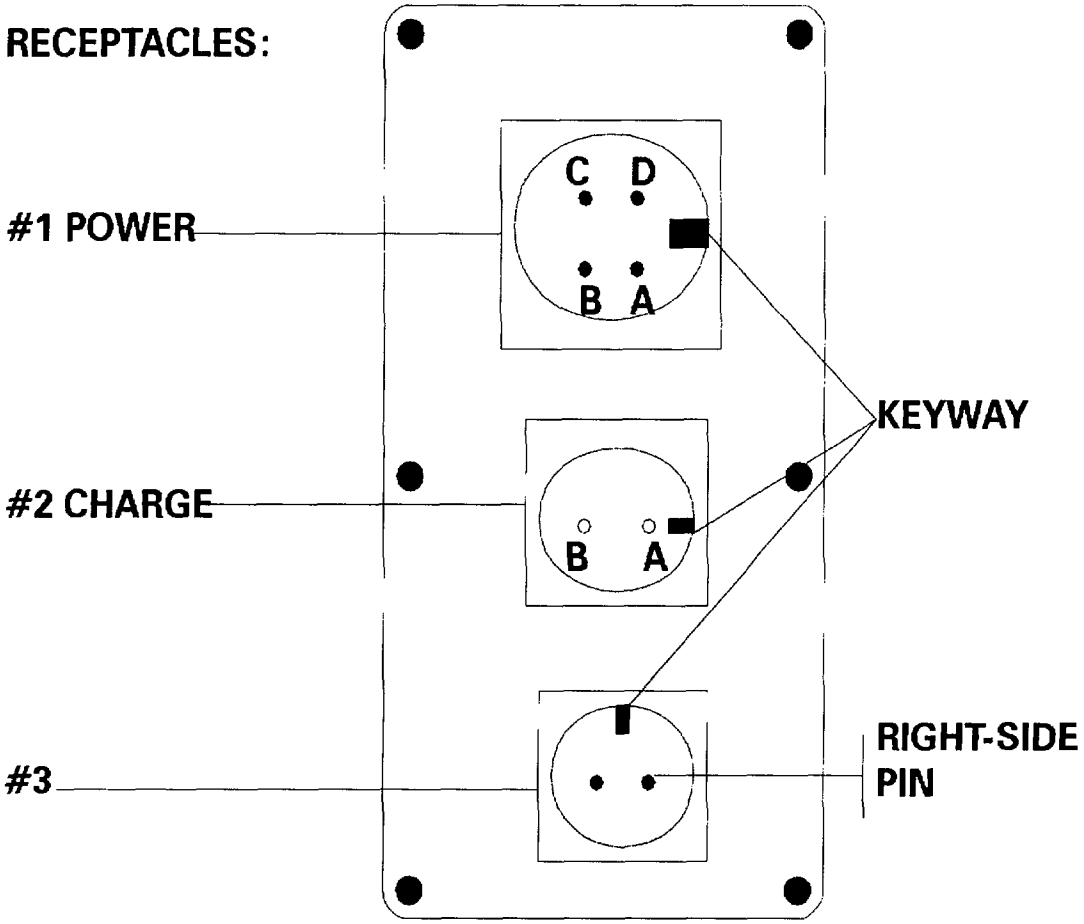

Figure 6.8. Junction Panel

6.3.4.2 Continuity Check of Junction Panel. Continuity readings other than the readings below indicate a short in the panel. Reject the HE or training line charge and return it to the Ammunition Supply Point.

One multimeter lead	Other multimeter lead	Continuity?
Receptacle #1, pin A	Receptacle #3 right side pin	Y
Receptacle #3 right side pin	On shell of Receptacle #3	N
Receptacle #3 right side pin	On right edge of panel*	N

* Scratch paint to bare metal between receptacles 2 and 3.

THIS PAGE INTENTIONALLY LEFT BLANK

APPENDIX A
REFERENCES

A.1 ARMY REGULATIONS

AR 385-40 ..... Accident Reporting and Records

AR 385-64 ..... Ammunition and Explosives Safety Standards

AR 40-5 ..... Preventive Medicine

AR 420-47 ..... Solid and Hazardous Waste Management

AR 55-38 ..... Reporting of Transportation Discrepancies in Shipments

AR 75-1 ..... Malfunctions Involving Ammunition and Explosives

DA PAM 385-64 ..... Ammunition and Explosives Safety Standards

A.2 FIELD MANUALS

FM 20-32 ..... Mine/Countermine Operations

FM 21-11 ..... First Aid for Soldiers

FM 31-70 ..... Basic Cold Weather Manual

FM 31-71 ..... Northern Operations

FM 9-207 ..... Operation and Maintenance of Ordnance Materiel in Cold Weather (0° F to Minus 65° F) (TO 36-1-40)

FM 55-450-3 ..... Multiservice Helicopter External Air Transport: Basic Operations And Equipment

A.3 FORMS

DA Form 2028 ..... Recommended Changes to Publications and Blank Forms

DA Form 2028-2 ..... Recommended Changes to Equipment Technical Publications

DA Form 2404 ..... Equipment Inspection and Maintenance Worksheet

DA Form 2415 ..... Ammunition Condition Report

DA Form 285 ..... U.S. Army Accident Investigation Report

DD Form 314 ..... Preventive Maintenance Schedule and Records

SF Form 361 ..... Transportation Discrepancy Report

SF Form 368 ..... Product Quality Deficiency Report

A.4 MARINE CORPS PUBLICATIONS

MCO 8025.1C ..... Class (VCW) Malfunction and Deficiency Reporting

TO 36-1-40 ..... Operation and Maintenance of Ordnance Materiel in Cold Weather (0°F to Minus 65°F) (TO 36-1-40)
PCN 320 009500 00

A.5 MODIFICATION WORK ORDERS

MWO 9-1375-215-30-1 ..... Modification of Trailer Mounted Line Charge Launcher Kit, MOD 0 (NSN 1055-01-203-5883), MOD 1 (1055-01-281-2770), Installation of Electromechanical Trailer Release Assembly

A.6 PAMPHLETS

DA Pam 738-750 ..... The Army Maintenance Management System (TAMMS)

A.7 SPECIFICATIONS

MIL-H-6083 ..... Hydraulic Fluid

MIL-S-8805/48E ..... Sensitive Switch

A.8 TECHNICAL BULLETINS

TB 740-97-2 ..... Preservation of USAMECOM Mechanical Equipment for Shipment and Storage

TB 9-2330-323-30 ..... Application of Special Purpose Modification to Trailer, Generator, 2-1/2 Ton, 2-Wheel: M200A1 for Use with Launcher, Mine Clearance: MK 155, MOD 1 as Component of Mine Clearing Line Charge (MICLIC)

TB MED 502 ..... Occupational and Environmental Health Respiratory Protection Program

TB MED 514 ..... Occupational and Environmental Health Requirements for Painting Operations

A.9 TECHNICAL MANUALS

TM 43-0001-38 ..... Army Ammunition Data Sheets for Demolition Materials

TM 43-0002-24 ..... Destruction of Army Materiel to Prevent Enemy Use

TM 43-0139 ..... Painting Instructions for Field Use

TM 9-1300-206 ..... Ammunition and Explosive Standards

TM 9-1300-250 ..... Ammunition Maintenance

TM 9-1375-213-12&P ..... Operator's and Organizational Maintenance Manual (Including Repair Parts and Special Tools List): Demolition Materials

TM 9-1375-213-34 ..... Direct Support and General Support Maintenance Manual (Including Repair Parts and Special Tools List): Demolition Materials

TM 9-2330-205-14&P ..... Operator's Organizational, Direct Support, and General Support Maintenance (Including Repair Parts and Special Tools List) for Chassis, Trailer, Generator, 2-1/2 Ton, 2-Wheel, M200A1 (2330-00-331-2307)

TM 9-2330-247-14&P ..... Operator's Organizational, Direct Support, and General Support Maintenance Manual (Including Repair Parts and Special Tools List) for Chassis, Trailer: General Purpose, 3-1/2 Ton, 2-Wheel, M353 (2300-00-542-2831)

TM 9-2330-389-14&P ..... Operator's Unit, Direct Support and General Support Maintenance Manual (Including Repair Parts and Special Tools List) for Tracked Trailer, Cargo (NSN 2330-01-360-3865)

THIS PAGE INTENTIONALLY LEFT BLANK.

APPENDIX B
MAINTENANCE ALLOCATION CHART

Section I. INTRODUCTION

B.1 GENERAL

a. This section provides a general explanation of all maintenance and repair functions authorized at various maintenance categories.

b. The Maintenance Allocation Chart (MAC) in Section II designates overall authority and responsibility for the performance of maintenance functions on the identified end-tem or component. The application of the maintenance functions to the end-item or component will be consistent with the capacities and capabilities of the designated maintenance categories.

c. Section III lists the tools and test equipment (both special tools and common tool sets) required for each maintenance function as referenced from Section II.

d. Section IV contains supplemental instructions and explanatory notes for a particular maintenance function.

B.2 MAINTENANCE FUNCTIONS

Maintenance functions will be limited to and defined as follows:

a. Inspect. To determine the serviceability of an item by comparing its physical, mechanical and/or electrical characteristics with established standards through examination (e.g., by sight, sound or feel).

b. Test. To verify serviceability by measuring the mechanical, pneumatic, hydraulic or electrical characteristics of an item and comparing those characteristics with prescribed standards.

c. Service. Operations required periodically to keep an item in proper operating condition, i.e., to clean (includes decontaminate, when required), to preserve, to drain, to paint or to replenish fuel, lubricants, chemical fluids or gases.

d. Adjust. To maintain or regulate, within prescribed limits, by bringing into proper or exact position or by setting the operating characteristics to specified parameters.

e. Align. To adjust specified variable elements of an item to bring about optimum or desired performance.

f. Calibrate. To determine and cause corrections to be made or to be adjusted on instruments or test, measuring and diagnostic equipments used in precision measurement. Consists of comparisons of two instruments, one of which is a certified standard of known accuracy, to detect and adjust any discrepancy in the accuracy of the instrument being compared.

g. Remove/Install. To remove and install the same item when required to perform service or other maintenance functions. Install may be the act of placing, seating, or fixing into position a spare, repair part, or module (component or assembly) in a manner to allow the proper functioning of an equipment or system.

h. Replace. To remove an unserviceable item and install a serviceable counterpart in its place. "Replace" is authorized by the MAC and is shown as the third position code of the SMR code.

i. Repair. The application of maintenance services[1], including fault location/troubleshooting[2], removal/installation and disassembly/assembly[3] procedures, and maintenance actions[4] to identify troubles and restore serviceability to an item by correcting specific damage, fault, malfunction or failure in a part, subassembly, module (component or assembly), end-item, or system.

j. Overhaul. That maintenance effort (service/action) prescribed to restore an item to a completely serviceable/operational condition as required by maintenance standards in appropriate technical publications (i.e., DMWR). Overhaul is normally the highest degree of maintenance performed by the Army. Overhaul does not normally return an item to like new condition.

k. Rebuild. Consists of those services/actions necessary for the restoration of unserviceable equipment to a like new condition in accordance with original manufacturing standards. Rebuild is the highest degree of materiel maintenance applied to Army equipment. The rebuild operation includes the act of returning to zero those age measurements (hours/miles, etc.) considered in classifying Army equipment/components.

---

[1]Services -- inspect, test, service, adjust, align, calibrate and/or replace.

[2]Fault locate/troubleshoot -- The process of investigating and detecting the cause of equipment malfunctioning; the act of isolating a fault within a system or Unit Under Test (UUT).

[3]Disassembly/assemble -- encompasses the step-by-step taking apart (or breakdown) of a spare/functional group coded item to the level of its least componency identified as maintenance significant (i.e., assigned and SMR code? for the category of maintenance under consideration.

[4]Actions -- welding, grinding, riveting, straightening, facing, remachining and/or resurfacing.

B.3 EXPLANATION OF COLUMNS IN THE MAC, Section II, Table B.1

a. Column 1, Group Number. Column 1 lists functional group code numbers, the purpose of which is to identify maintenance significant components, assemblies, subassemblies and modules with the next higher assembly. End-item group number shall be "00".

b. Column 2, Component/Assembly. Column 2 contains the names of components, assemblies, subassemblies and modules for which maintenance is authorized.

c. Column 3, Maintenance Function. Column 3 lists the functions to be performed on the item listed in column 2. (For detailed explanation of these functions, see para B-2).

d. Column 4, Maintenance Category. Column 4 specified, by the listing of a work-time figure in the appropriate subcolumn(s), the category of maintenance authorized to perform the function listed in column 3. This figure represents the active time required to perform that maintenance function at the indicated category of maintenance. If the number or complexity of the tasks within the listed maintenance function vary at different maintenance categories, appropriate work-time figures will be shown for each category. The work-time figure represents the average time required to restore an item (assembly, subassembly, component, module, end-item or system), to a serviceable condition under typical field operating conditions. This time includes preparation time (including any necessary disassembly/assembly time), troubleshooting/fault location time and quality assurance/ quality control time in addition to the time required to perform the specific tasks identified for the maintenance functions authorized in the maintenance allocation chart. The symbol designations for the various maintenance categories are as follows:

C	Operator or crew
O	Unit maintenance
F	Direct support maintenance
H	General support maintenance
L	Specialized repair activity (SRA)[5]
D	Depot maintenance

[5]This maintenance category is not included in Section II, column (4) of the Maintenance Allocation Chart. To identify function to this category of maintenance, enter a worktime figure in the "H" column of Section II, column (4) and use an associated reference code in the Remarks column (6). Key the code to Section IV, Remarks and explain the SRA complete repair application there. The explanatory remark(s) shall reference the specific Repair Parts and Special Tools List (RPSTL) of the respective TM which contains additional SRA criteria and the authorized spare/repair parts.

e. Column 5, Tools and Equipment. Column 5 specifies, by code, those common tool sets (not individual tools) and special tools, TMDE and support equipment required to perform the designated function.

f. Column 6, Remarks. This column shall, when applicable, contain a letter code, in alphabetic order, which shall be keyed to the remarks contained in Section IV.

B.4 EXPLANATION OF COLUMNS IN TOOL AND TEST EQUIPMENT REQUIREMENTS, Section III, Table B.2

a. Column 1, Reference Code. The tool and test equipment reference code correlates with a code used in the MAC, Section II, Column 5.

b. Column 2, Maintenance Category. The lowest category of maintenance authorized to use the tool or test equipment.

c. Column 3, Nomenclature. Name or identification of tool or test equipment.

d. Column 4, National Stock Number. The National Stock Number of the tool or test equipment.

e. Column 5, Tool Number. The manufacturer's part number.

B.5 EXPLANATION OF COLUMNS IN REMARKS, SECTION IV, TABLE B.3

a. Column 1, Reference Code. The code recorded in Section II, column 6.

b. Column 2, Remarks. This column lists information pertinent to the maintenance function being performed as indicated in the MAC, Section II.

B.6 AMMUNITION MAC. Because ammunition items normally do not require scheduled, periodic maintenance, a simplified format is used. The AMMO MAC identifies the lowest level at which each of the basic maintenance tasks identified can be done.

Section II. MAINTENANCE ALLOCATION CHART

Table B.1. Maintenance Allocation Chart

(1) GROUP NO.	(2) COMPONENT/ ASSEMBLY	(3) MAINT. FUNC.	(4) Maintenance Category					(5) TOOLS AND EQPT REF CODE	(6) REMARKS CODE
			Unit		Dir Spt	Gen Spt	Depot		
			C	O	F	H	D		
00	MK 155 LAUNCHER, MINE	INSPECT	0.1						
	CLEARING LINE CHARGE	SERVICE	0.3					3,6	B,C
	(MOD 2/3 COMPONENTS)	REPLACE		0.3				10,11	
		REPAIR		0.3	0.3			13,14	
01	LAUNCHER RAIL ASSEMBLY	INSPECT	0.1						
		SERVICE	0.1					3,12	B,C
		REPLACE		0.3					
		REPAIR		1.0					
0101	CROSS PIECE ASSEMBLY	INSPECT	0.2						
		REPLACE		0.2					
		REPAIR		0.2				12	B,C
02	STARBOARD AND PORT	INSPECT	0.1						
	TELESCOPING TUBE	SERVICE	0.1						
	ASSEMBLY	REPLACE		1.2				12	B,C
		REPAIR		0.5	0.3				
0201	SAFETY SWITCH	INSPECT	0.1						
	ASSEMBLY	SERVICE	0.1						
		TEST			0.3			7,12	B
		ADJUST			1.0			7,12	
		REPLACE			0.3			9,12	
		REPAIR			2.0				
03	HYDRAULICS ASSEMBLY	INSPECT	0.1						
		SERVICE	0.1	0.2				12	A,E,F
		REPAIR		0.3				12,13	

Table B.1. Maintenance Allocation Chart (Cont)

(1) GROUP NO.	(2) COMPONENT/ ASSEMBLY	(3) MAINT. FUNC.	(4) Maintenance Category					(5) TOOLS AND EQPT REF CODE	(6) REMARKS CODE
			Unit		Dir Spt	Gen Spt	Depot		
			C	O	F	H	D		
0301	LINEAR ACTUATING	INSPECT	0.1						
	CYLINDER ASSEMBLY	REPLACE		0.3				12	E
	REPAIR				2.0			12,13	
030101	LINEAR ACTUATING	REPLACE			0.1			12,13	E
	CYLINDER	REPAIR			1.0				
0302	HAND-DRIVEN HYDRAULIC	INSPECT	0.1						
	PUMPING UNIT	SERVICE	0.1						B,C
		REPLACE		0.2				12	E
		REPAIR		0.1	2.0			12	
0303	DIRECTIONAL CONTROL	INSPECT	0.1						
	LINEAR VALVE	REPLACE		0.3				12	E
		REPAIR	0.2					12,13	B,C
04	SELECTOR SWITCH	INSPECT	0.1						
	ASSEMBLY	TEST	0.2					7	
		REPLACE		0.1					
		REPAIR		0.1	0.8			7,9.12	B
0401	ARMAMENT SYSTEM	REPLACE		0.1					
	ELECTRICAL CONTROL BOX	REPAIR		0.2	0.2			7,9,12	B
0402	W5 POWER CABLE ASSEMBLY	INSPECT	0.1						
		REPLACE		0.1				7,12	B
		REPAIR		0.2					
0403	W3 POWER CABLE ASSEMBLY	INSPECT	0.1						
		REPLACE		0.1				7,12	B
		REPAIR		0.2					
0404	W6 POWER CABLE ASSEMBLY	INSPECT	0.1						
		REPLACE		0.1				7,12	B
		REPAIR		0.1					
05	TRAILER DISCONNECT	INSPECT	0.1						
	DEVICE	SERVICE	0.1						B,C
		TEST	0.1	0.3					
		REPLACE		0.2				4,5,8	
		REPAIR		1.0				12	

Section III. TOOL AND TEST, EQUIPMENT REQUIREMENTS FOR MICLIC

Table B.2. Tools and Test Equipment

TOOL OR TEST EQUIP-MENT	MAINTENANCE CATEGORY	NOMENCLATURE	NATIONAL	TOOL
1	C	TEST SET, BLASTING CAP: M51	4925-00-999-3454	9227694
2	O	CUTTER, STEEL STRAPPING	5110-00-223-6281	GGG-C-835
3	F	GRINDER; ELECTRIC, PORTABLE	5130-01-087-6822	W-G-663
4	O	KEY, HEX, 1/2"	5120-00-198-5391	GGG-K-275
5	O	KEY, HEX, 5/16"	5120-00-240-5274	GGG-K-275
6	O	MATERIAL HANDLING EQUIPMENT	ORGANIC	
7	O	MULTIMETER	6625-01-131-8586	FLUKE-87
8	O	PLIERS, RETAINING RING	5120-00-089-0874	PR/12
9	F	SOLDERING AND DESOLDERING SET	3459-00-460-7198	W-TCP-K
10	O	SPRAYER, PAINT	4940-01-107-7456	12000647-6
11	O	STRETCHING AND SEALING MACHINE, STRAPPING, HAND	3450-00-252-5215	Same As NSN
12	O	TOOL KIT, GENERAL MECHANIC'S		
		•· Army	5180-00-177-7033	SC 5180-90-N26
		•· Marine Corps	5180-00-606-3566	
13	O	VISE, BENCH AND PIPE	5120-00-243-0110	922-0583-060
14	F	WELDING SET, ARC, INERT GAS SHIELDED	3431-00-691-1415	MIL-W-52161

Section IV. REMARKS

Table B.3. Remarks

REFERENCE CODE	REMARKS
A	Fill with hydraulic fluid
B	Clean
C	Lubricate
D	Spot paint/paint
E	Bleed system
F	Prepare for maintenance
G	Weld
H	As determined for trailer chassis
I	Fabricate
J	Touchup
K	Mark

APPENDIX C
COMPONENTS OF END-ITEM AND BASIC ISSUE ITEMS LISTS

Section I. INTRODUCTION

C.1 SCOPE. This appendix lists components of End-Item and Basic-issue Items for the MICLIC to help inventory items required for safe and efficient operation.

C.2 GENERAL. The Components of End-Item and Basic-issue Items Lists are divided into the following sections:

a. Section II - Components of End-item. This listing is for informational purposes only, and is not authority to requisition replacements. These items are part of the MICLIC, but are removed and separately packaged for transportation or shipment only when necessary. As part of the MICLIC, these items must be with the MICLIC whenever it is issued or transferred between property accounts. Illustrations are furnished to assist in identifying the items.

b. Section III - Basic-Issue-Items. These are the minimum essential items required to place the MICLIC in operation, to operate it, and to perform emergency repairs. Although shipped separately packaged, Basic-Issue-Items must be with the MICLIC during operation and whenever it is transferred between property accounts. The illustrations will assist you with hard-to-identify items. This manual is your authority to request/requisition replacement Basic-Issue-items, based on TOE/MTOE authorization of the End-Item.

C.3 EXPLANATION OF COLUMNS. The following provides an explanation of columns found in the tabular listings:

a. Column (1) - Illustration Number. Indicates the number of the illustration in which the item is shown.

b. Column (2) - National Stock Number (NSN) and Department of Defense Identification Code (DODIC)/Navy Ammunition Logistics Code (NALC). Indicates the NSN assigned to the item and will be used for requisitioning purposes. The DODIC/NALC is assigned to the item and is used to identify the category of ammunition.

c. Column (3) - Description. Indicates the Federal Item Name and, if required, a minimum description to identify and locate the item. The last line for each item indicates the CAGE (in parentheses) followed by the part number. If item required differs for different models of this equipment, the model is shown under the "Usable on Code" heading in this column. These codes are identified as: MLC - MOD 0; MLD - MOD 1; MLF - MOD 2; MLE - MOD 3; ALL - ALL four MODS.

d. Column (4) - Unit of Issue (U/I). Indicates how the item is issued for the NSN shown in column two. This measure is expressed by a two-character alphabetical abbreviation (e.g., ea, in., pr).

e. Column (5) - Quantity Required (Qty Rqr). Indicates the quantity of the item authorized to be used with/on the equipment.

Section II. COMPONENTS OF END-ITEM

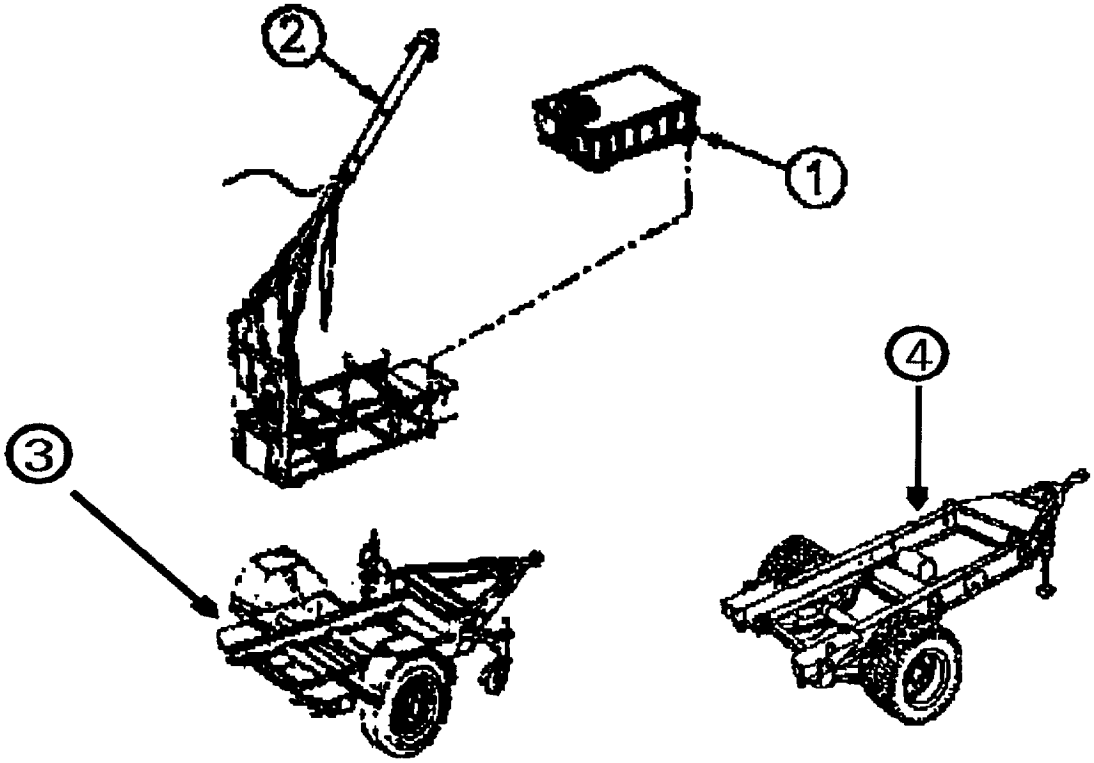

Figure C.1. Components of End-item

Table C.1. Components of End-Item

(1) Illus Number	(2) National Stock Number DODIC/NALC	(3) Description CAGE and Part Number	(4) U/I	(5) Qty Rqr
1	1375-01-133-4189 M913	CHARGE, DEMOLITION: LINEAR, HE, M58A3 (53711) DL2128451	EA	1
	OR			
	1375-01-237-5933 M913	CHARGE, DEMOLITION: LINEAR, HE, M58A4 (10001) DL2128451	EA	1
	OR			
	1375-01-326-7215 M913	CHARGE, DEMOLITION: LINEAR, HE, M58A4	EA	1
	OR			
	1375-01-287-0719 M913	CHARGE, DEMOLITION: LINEAR, HE, M58A4	EA	1
	1375-01-125-6521 M914	CHARGE, DEMOLITION, PRACTICE: M68A2, INERT LINEAR (10001) DL2128450	EA	1
2	1340-01-116-7799 J143	ROCKET MOTOR: 5-INCH, MK 22 MOD 3 (14083)	EA	1
	OR			
	1340-01-118-2838 J143	ROCKET MOTOR: 5-INCH, MK 22, MOD 4 (14083) 525-174-0129	EA	1
3	2330-00-542-2831 TM 9-2330-247-14&P	CHASSIS, TRAILER, GENERAL PURPOSE, 3-1/2 TON, 2-WHEEL M353 (19207) 8736268 MANUAL, TECHNICAL	EA EA	1 1
4	2330-00-331-2307 TM 9-2330-205-14&P	CHASSIS, TRAILER, 2-1/2 TON, DUAL-WHEEL M200A1, MODIFIED (19207) 8758998 MANUAL, TECHNICAL	EA 1	1 1
	OR			
	  TM9-2330-389-14&P	CHASSIS, TRAILER, 2-1/2 TON, TRACKED, M200A1, MODIFIED (19207) 8758998 MANUAL, TECHNICAL	EA EA	1 1

Section III. BASIC-ISSUE-ITEM - LAUNCHER

Table C.2. Basic-issue-item - Launcher

(1) Illus Number	(2) National Stock Number	(3) Description CAGE and Part Number	Usable On Code	(4) U/I	(5) Qty Rqr
1	1375-00-567-0223	BLASTING MACHINE, M34 (19200) 9312773	ALL	EA	1

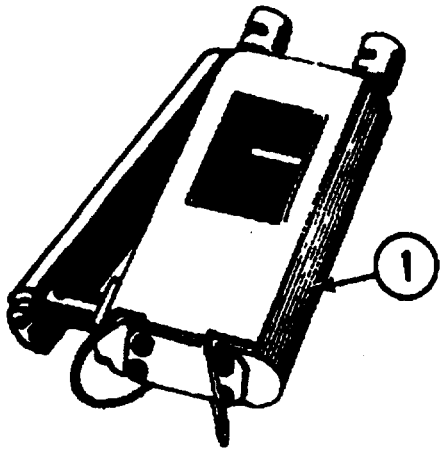

Figure C.2a. Basic-issue-tem - Launcher

Table C.2. Basic-Issue-item - Launcher (Cont)

(1) Illus Number	(2) National Stock Number	(3) Description CAGE and Part Number	Usable On Code	(4) U/I	(5) Qty Rqr
2	5306-01-226-8720	BOLT, U (01365) 82A5052A0005	ALL	EA	4
3	5310-00-491-5895	WASHER, FLAT (96906) MS16212-15			
4	5310-00-937-0453	WASHER, LOCK (96906) MS35338-145			
5	5310-00-764-6609	NUT, HEX (96906) MS51971-7			
6	6150-01-221-5866	SELECTOR SWITCH BOX (01365) 82A5052A0800	MLC	EA	
	OR				
7	1055-01-343-8527	CONTROL BOX, ELECTRICAL, ARMAMENT SYSTEM: SELECTOR SWITCH ASSEMBLY (01365) 82A5052A2112	MLE/ MLF	EA	1

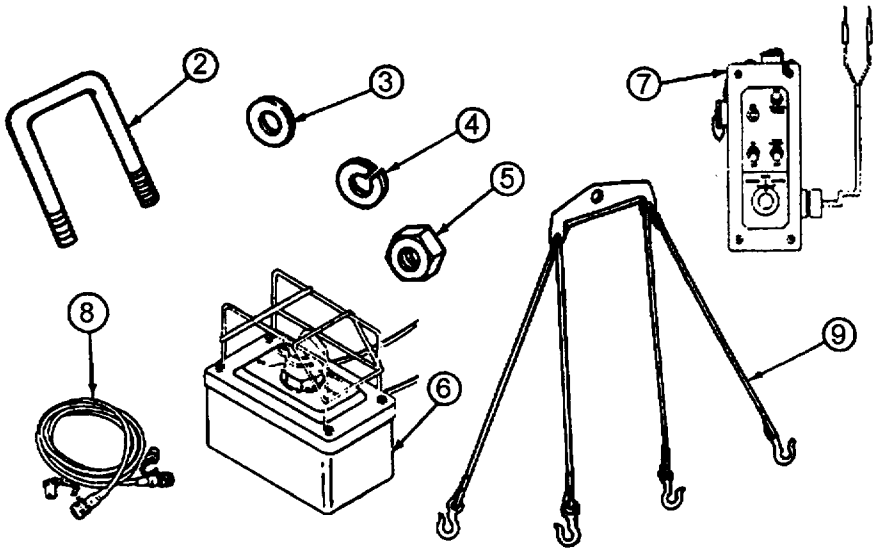

Figure C.2b. Components of Basic-Issue-Item - Launcher

Table C.2. Basic-Issue-item - Launcher (Cont)

(1) Illus Number	(2) National Stock Number	(3) Description CAGE and Part Number	Usable On Code	(4) U/I	(5) Qty Rqr
8	5995-01-218-2417	CABLE ASSEMBLY POWER, ELECTRICAL: NO. 3 (01365) 82A5052A0803 (75 FOOT PURPOSE CABLE)	MLC	EA	1
9	3940-01-218-2823	SLING, BEAM TYPE (01365) 82A5052A0360	ALL	EA	1
10	6150-01-348-4036	CABLE, ELECTRICAL, BRANCHED: W5 (01365) 82A5052A2103	MLE/ MLF	EA	1
11	6150-01-347-4724	CABLE, POWER, ELECTRICAL: W6 (01365) 82A5052A2104	MLE/ MLF	EA	1
12	6150-01-347-8428	CABLE, ELECTRICAL, 60-FOOT: W3 (01365) 82A5052A2102	MLE/ MLF	EA	1

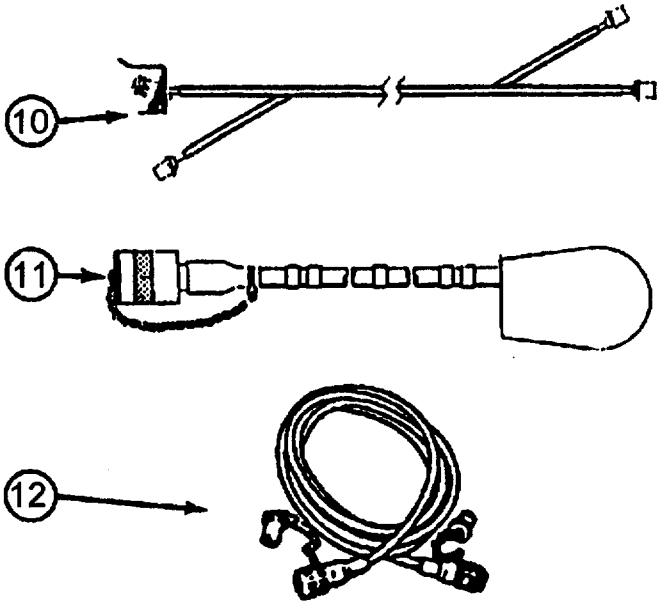

Figure C.2c. Components of Basic-Issue-Item - Launcher

Table C.2. Basic-Issue-Item - Launcher (Cont)

(1) Illus Number	(2) National Stock Number	(3) Description CAGE and Part Number	Usable On Code	(4) U/I	(5) Qty Rqr
13	1055-01-216-9423	COVER, PROTECTIVE, ROCKET (01365) 82A5052A0700	ALL	EA	1
14	5340-01-248-7962	TURNBUCKLE: 1.00 X 6 FF-T-791, TYPE 1, FORM 1, CLASS 5 (81349)	ALL	EA	2
15	5340-01-249-0589	TURNBUCKLE: 1.00 X 12 FF-T-791, TYPE 1, FORM 1, CLASS 5 (81349)	ALL	EA	2
16	5310-00-246-0128	NUT, PLAIN, HEXAGON, 1.0 IN. MS27952-15 (96906)	ALL	EA	4
17	5310-00-891-3463	NUT, PLAIN, HEXAGON, 1.0 IN. MS35691-79 (96906)	ALL	EA	4
18	4030-01-136-4535	SHACKLE 3/4 (39428) 3559151	MLE/ MLF	EA	2

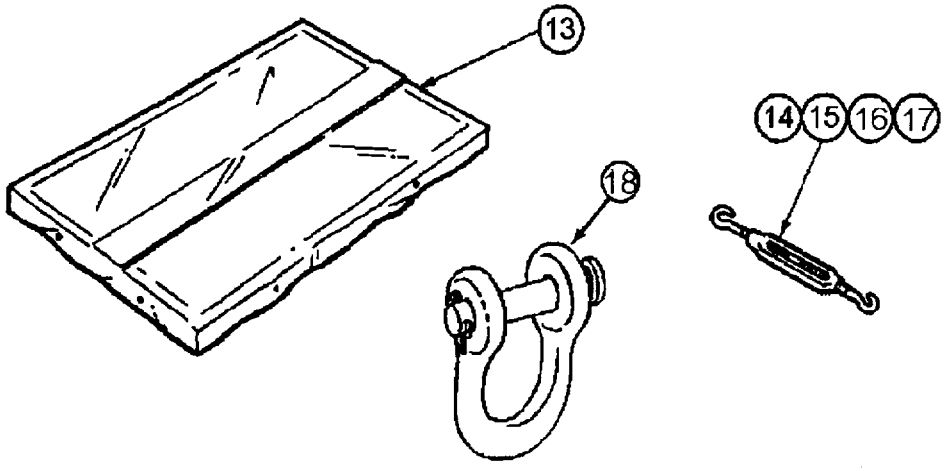

Figure C.2d. Basic-Issue-Item - Launcher

Table C.2. Basic-Issue-Item - Launcher (Cont)

(1) Illus Number	(2) National Stock Number	(3) Description CAGE and Part Number	Usable On Code	(4) U/I	(5) Qty Rqr
19	5120-00-423-6728	WRENCH, OPEN END, ADJUSTABLE, SIZE 15, 1-11/16 IN. OPENING (80204) ANSI-B107.8	ALL	EA	2
20	5120-00-935-7452	SOCKET, SOCKET WRENCH, 0.5 IN. SQ DRIVE LONG LENGTH, 15/16 IN. (30106) AL-30	ALL	EA	1
21		JOINT TM-08982A-14/2B TM9-1375-215-13&P	ALL	1	

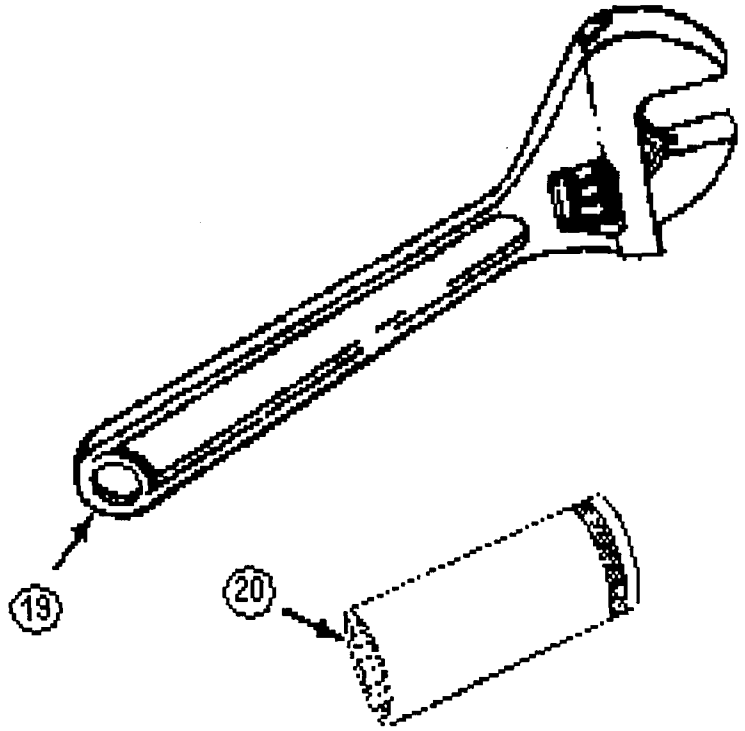

Figure C.2e. Components of Basic-Issue-item - Launcher

Section IV. TEST MEASUREMENT AND DIAGNOSTIC EQUIPMENT

Table C.3. Test Measurement and Diagnostic Equipment

(1) Illus Number	(2) National Stock Number	(3) Description CAGE and Part Number	Usable On Code	(4) U/I	(5) Qty Rqr
1	4925-00-999-3454	TEST SET, BLASTING CAP: M51 (19200) 9227694	ALL	1	1

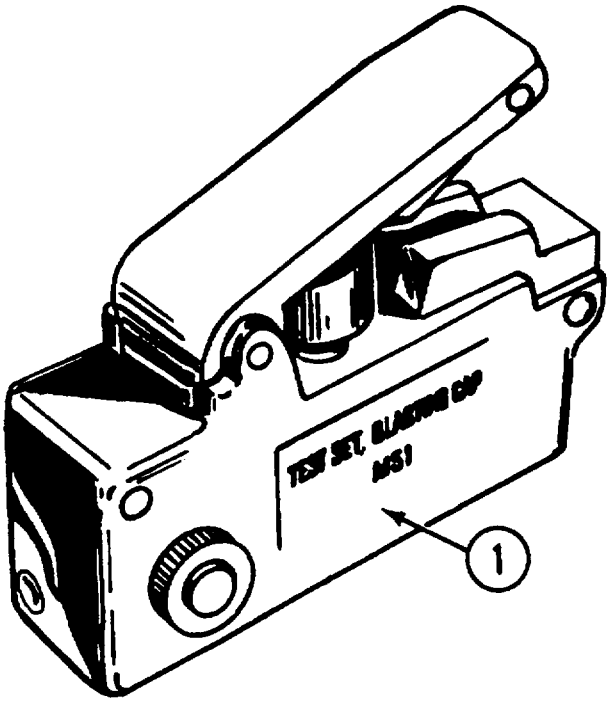

Figure C.3. Components of Test and Measurement Diagnostic Equipment

APPENDIX D
ADDITIONAL AUTHORIZED LIST

D.1 SCOPE. There are no additional authorized items for the MK 155 Launcher Mine Clearing Line Charge.

THIS PAGE INTENTIONALLY LEFT BLANK.

APPENDIX E
EXPENDABLE/DURABLE SUPPLIES AND MATERIALS LIST

Section I. INTRODUCTION

E.1 SCOPE. This appendix lists expendable/durable supplies and materials you will need to operate and maintain MICLIC. This listing is for informational purposes only and is not authority to requisition the listed items. These items are authorized to you by CTA 50-970, Expendable/Durable Items (Except Medical, Class V, Repair Parts, and Heraldic Items), or CTA 8-100, Army Medical Department Expendable/Durable Items.

E.2 EXPLANATION OF COLUMNS

a. Column 1 - Item Number. This number is assigned to the entry in the listing and is referenced in the narrative instructions to identify the material (e.g., "Use cleaning compound, Appendix E, Item 5").

b. Column 2 - Level. This column identifies the lowest level of maintenance that requires the listed item.

C - Operator/Crew
O - Unit/Organizational Maintenance
F - Direct Support Maintenance

c. Column 3 - National Stock Number. This is the National Stock Number (NSN) assigned to the item; use it to request or requisition the item.

d. Column 4 - Description. Indicates the federal item name and, if required, a description to identify the item. The last line for each item indicates the Commercial and Government Entity Code (CAGE) in parentheses followed by the part number.

e. Column 5 - Unit of Measure (U/M). Indicates the measure used in performing the actual maintenance function. This measure is expressed by a two-character alphabetical abbreviation (e.g., ea, in., pr). If the unit of measure differs from the unit of issue, requisition the lowest unit of issue that will satisfy your requirements.

Section II. EXPENDABLE/DURABLE SUPPLIES AND MATERIALS LIST

Table E.1. Expendable/Durable Supplies and Materials List

(1) ITEM NUMBER	(2) LEVEL	(3) NATIONAL STOCK NUMBER	(4) DESCRIPTION	(5) U/M
1	O	6810-00-184-4796	ACETONE, TECHNICAL (81348) O-A-51	CN
2	F	6810-00-543-7415	ALCOHOL, DENATURED (80244) O-E-760 TY3	GL
3	O	8415-00-634-5023	APRON, LABORATORY (15481) 021-758	EA
4	O	8020-00-246-8504	BRUSH, ARTIST'S: round flat edge (81348) H-B-118	EA
5	O	8020-00-244-0156	BRUSH, ARTIST: 7/8 in. X 1 in. (81348) H-B-241	BX
6	O	8020-01-126-1437	BRUSH, PAINT: polyurethane foam, 2", chiseled, flat, disposable - throw-away (60369) PP-2	BX
7	O	8020-01-126-1439	BRUSH, PAINT: polyurethane foam, 3", chiseled, flat, disposable - throw-away (60369) PP-3	EA
8	O	8020-01-126-1438	BRUSH, PAINT: polyurethane foam, 4", chiseled, flat, disposable - throw-away (60369) PP-4	EA
9	O	8020-00-245-4522	BRUSH, PAINT: flat with square edge (81348) H-B-391	EA
10	F	8020-00-597-5301	BRUSH, PAINT: oval style (81348) H-B-491	EA
11	C	7920-00-282-2470	BRUSH, SCRUB (81348) H-B-1490	EA

Table E.1. Expendable/Durable Supplies and Materials List (Cont)

(1) ITEM NUMBER	(2) LEVEL	(3) NATIONAL STOCK NUMBER	(4) DESCRIPTION	(5) U/M
12	O	7520-00-223-8000	BRUSH, STENCIL H-B-00621 (58536) A-A-2903	EA
13	C	7920-00-255-5135	BRUSH, WIRE, SCRATCH: BeCu (85211) CH2-372-BC	EA
14	F	7420-00-282-8411	CAN, FLAMMABLE WASTE (58536) A-A-1674	EA
15	F	8520-00-782-3509	CLEANER, HAND (58536) A-A-279	CN
16	O	6850-00-927-9461	COMPOUND, SILICONE (Dow Corning) (58536) A-A-56022	OZ
17	O	7930-00-249-8036	DETERGENT (58536) A-A-1376	BX
18	O		DRY CLEANING SOLVENT: Liquid White, 140° flash point (SD-2) (81348)	
		6850-00-281-3061	P-D-680 4 oz can	OZ
		6850-00-281-1985	P-D-680 1 gal can	GL
19	F	3439-00-262-2671	ELECTRODE, WELDING (81348) QQ-E-450	LB
20	O	8010-00-297-2122	ENAMEL: black, No. 37038 (96906) MS 35527-2	GL
21	O	8010-00-297-2119	ENAMEL: medium blue, No. 35109 (96906) MS 35527-3	GL
22	O	8010-00-935-7156	ENAMEL: medium blue, No. 35109 (81348) TT-E-516	PT
23	O	8010-00-297-2116	ENAMEL: olive drab No. 34087 (96906) MS 35527-8	GL

Table E.1. Expendable/Durable Supplies and Materials List (Cont)

(1) ITEM NUMBER	(2) LEVEL	(3) NATIONAL STOCK NUMBER	(4) DESCRIPTION	(5) U/M
24	O	8010-00-298-2292	ENAMEL: olive drab No. 34087 (81348) TT-E-516	PT
25	F	8010-00-878-5117	ENAMEL: olive drab spray can (81348) TT-E-489	PT
26	O	8010-00-878-5761	ENAMEL: white No. 37875 (81348) TT-E-516	PT
27	O	8010-00-297-2112	ENAMEL: yellow No. 33538 (96906) MS 35527-12	GL
28	O	4240-00-542-2048	FACE SHIELD (58536) A-A-1170	EA
29	O	5315-00-597-9766	FASTENER, CORRUGATED, WOOD JOINT (58536) A-A-1957	HD
30	O	4240-01-246-0314	MASK, AIR FILTERING (50378) 8710-20	EA
31			FLUID, HYDRAULIC (81349)	
	C	9150-00-935-9807	MIL-H-6083	QT
	C	9150-00-935-9808	MIL-H-6083	GL
32	F	3439-00-255-9935	FLUX, SOLDERING (58536) A-A-51145 TYI FORM A	LB
33	C	8415-00-634-4660	GLOVES, MEN'S (58536) A-A-50021	PR
34	O	8030-00-763-4841	GLOVES, PLASTIC: disposable (22527) 11-394-11C	PR
35	O	4240-00-052-3776	GOGGLES, INDUSTRIAL (58536) A-A-1110	PR

Table E.1. Expendable/Durable Supplies and Materials List (Cont)

(1) ITEM NUMBER	(2) LEVEL	(3) NATIONAL STOCK NUMBER	(4) DESCRIPTION	(5) U/M
36			GREASE, AUTOMOTIVE AND ARTILLERY	
	C	9150-01-197-7688	(81349) MIL-G-10924 2.25 oz	TU
	C	9150-01-197-7689	(81349) MIL-G-10924 6.5 lb	CN
37	O	9150-00-257-5370	GREASE, GRAPHITE (81348) VV-G-671	LB
38	F	7510-00-161-0811	INK, MARKING, STENCIL: black (58536) A-A-208	GL
39	F	7510-00-161-0815	INK, MARKING, STENCIL: white (58536) A-A-208	GL
40	F	7510-00-161-0816	INK, MARKING, STENCIL: yellow (58536) A-A-208	
41	C	9150-01-402-4478	LUBE OIL, ICE, ARCTIC (52195) APG 1	QT
42	C	9150-01-402-2372	LUBE OIL, ICE, ARCTIC (52195) APG 1	GL
43	C	9150-01-177-3988	LUBE OIL, ICE, TACTICAL (81349) MIL-L-2104	QT
44	C	7520-00-973-1059	MARKER, TUBE, TYPE: black (58536) A-A-2758	DZ
45	F	5315-00-889-2743	NAIL, BOX: style 4, type II, 4D (81346) ASTM-F1667	PKG
46	C	9150-00-529-7518	OIL, PENETRATING (81348) A-A-50493	OZ
47	C	5350-00-271-5950	PAPER, ABRASIVE, CLOTH (80204) ANSI B74.18	SE
48	O	8010-01-229-7546	POLYURETHANE COATING: CARC, green (81349) MIL-C-53039	QT

Table E.1. Expendable/Durable Supplies and Materials List (Cont)

(1) ITEM NUMBER	(2) LEVEL	(3) NATIONAL STOCK NUMBER	(4) DESCRIPTION	(5) U/M
49	O	8010-01-234-2934	POLYURETHANE COATING: CARC, sand (81349) MIL-C-53039	QT
50	C	7930-00-721-8592	POWDER, SCOURING (58536) A-A-269	BX
51	F	8010-01-193-0577	PRIMER, EPOXY (81349) MIL-P-53022	KT
52	O	8030-00-145-0084	PRIMER, RUST ARRESTING COATING (81349) MIL-C-10578	CN
53	O	7920-00-205-1711	RAGS, WIPING, COTTON (58536) A-A-2522	BE
54	O	5340-00-292-0886	SEAL, ANTIPILFERAGE: lead (11821) LEADSEAL	HD
55	O	8135-00-239-5294	SEAL, STRAPPING: 1-1/4 in. (81346) ASTM-D-3953-87	BX
56	O	8135-00-290-1086	SEAL, STRAPPING: 5/8 in. (81346) ASTM-D-3953-87	BX
57	O	8030-00-081-2330	SEALING COMPOUND: blue, liquid, C or CV, 50 cc bottle (80249) MIL-S-22473	BT
58	F	3439-00-555-4629	SOLDER, 1 LB SPOOL, .032 (81348) QQ-S-571	AR
59	O	9310-00-240-4737	STENCILBOARD (58536) A-A-1733	SH
60	C	5340-01-029-9084	STRAP, ELASTIC-S-HOOKS (13435) 13018	EA
61	C	5975-00-074-2072	STRAP, TIEDOWN: 6 1/2 in. (S3120) C121Z9C102	HD

Table E.1. Expendable/Durable Supplies and Materials List (Cont)

(1) ITEM NUMBER	(2) LEVEL	(3) NATIONAL STOCK NUMBER	(4) DESCRIPTION	(5) U/M
62	O	8135-00-283-0671	STRAPPING, STEEL: 1 1/4 in. (81348) ASTM D 3953-87	CL
63	O	8135-00-281-4071	STRAPPING, STEEL: 5/8 in. (81346) ASTM D 3953-87	CL
64	C	5640-00-103-2254	TAPE, ADHESIVE, 2 in. (39428) 1791K70	RO
65	O	8030-00-889-3534	TAPE, ANTISEIZE (81349) MIL-T-27730	EA
66	F	5970-00-184-2002	TAPE, ELECTRICAL (81348) HH-I-553	RO
67	C	7510-00-198-5831	TAPE, MASKING (58536) A-A-194	PKG
68	O	7510-00-266-6715	TAPE, PRESSURE SENSITIVE: Clear, 2 in. wide (58536) A-A-1830	RO
69			TAPE, PRESSURE SENSITIVE, (58536)	
	O	7510-00-266-6712	A-A-883 Tan, 1 in. wide	RO
	O	7510-00-266-6710	A-A-883 Tan, 2 in. wide	RO
70	O	7510-00-159-4450	TAPE, PRESSURE SENSITIVE, FILAMENT REINFORCED (58536) A-A-1 687	RO
71	F	8010-00-087-1953	THINNER, SYNTHETIC (81348) TT-T-306	QT
72	O	8010-00-160-5794	THINNER, SYNTHETIC RESIN (96906) MS35628-2	GL
73	O	5350-00-255-7736	WOOL, METALLIC: copper (58536) A-A-1044	LB

THIS PAGE INTENTIONALLY LEFT BLANK.

APPENDIX F
OPERATOR'S, UNIT, DIRECT SUPPORT AND GENERAL SUPPORT MAINTENANCE MANUAL INCLUDING REPAIR PARTS AND SPECIAL TOOLS LIST

Section I. INTRODUCTION

F.1 SCOPE. This Repair Pans and Special Tools List (RPSTL) lists and authorizes spares and repair parts; special tools; Special Test, Measurement, and Diagnostic Equipment (TMDE); and other special support equipment required for performance of Operator's, Unit, and Direct Support and General Support Maintenance of the MICLIC. It authorizes the requisitioning, issue, and disposition of spares, repair parts and special tools as indicated by the Source, Maintenance and Recoverability (SMR) Codes.

F.2 GENERAL. This Repair Parts and Special Tools List is divided into the following sections:

a. Section II, Repair Parts List. A list of spare and repair parts authorized by this RPSTL for use in the performance of maintenance. This list also includes parts which must be removed for replacement of the authorized parts. Parts lists are composed of functional groups in ascending alpha-numeric sequence, with the parts in each group listed in ascending figure and item number sequence. Bulk materials are listed by item name in FIG. BULK at the end of the section. Repair parts kits are listed separately in their own functional group within Section II. Repair parts for repairing special tools are also listed in Section II. Items listed are shown on the associated illustration.

b. Section III, Special Tools List. A list of special tools, special TMDE, and other special support equipment authorized by this RPSTL (as indicated by Basis of Issue (BOI) information in DESCRIPTION AND USABLE ON CODE (UOC) column) for the performance of maintenance.

c. Section IV - Cross-Reference Indexes. A list, in National Item Identification Number (NIIN) sequence, of all National Stock Numbered items appearing in the listing, followed by a separate list in alpha-numeric sequence of all part numbers appearing in the listings. National Stock Numbers and Part Numbers are cross- referenced to each illustration figure and item number appearance. The figure and item number index lists figure and item numbers in alpha-numeric sequence and cross-references NSN, CAGE and Part Numbers.

F.3 EXPLANATION OF COLUMNS (Sections II and III)

a. FIGURE NO. (Column (1)). Indicates the applicable figure.

b. ITEM NO. (Column (2)). Indicates the number used to identify items called out in the illustration.

c. SMR CODE (Column (3 Army) (4 USMC)). The Source, Maintenance, and Recoverability (SMR) Code is a 5-position code containing supply/requisitioning information, maintenance category authorization criteria, and disposition instructions, as shown in the following breakout:

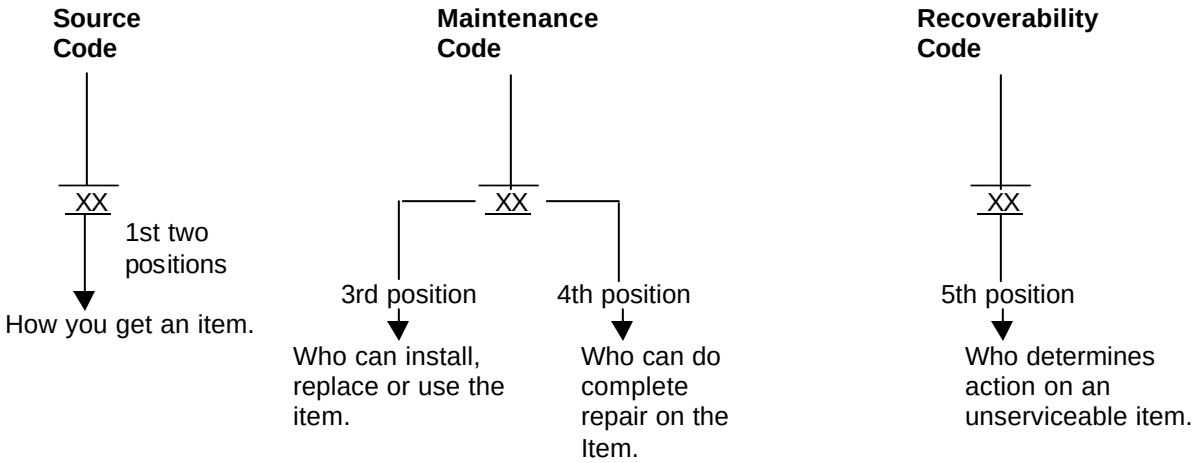

NOTE

COMPLETE REPAIR: MAINTENANCE CAPACITY, CAPABILITY, AND AUTHORITY TO PERFORM ALL CORRECTIVE MAINTENANCE TASKS OF THE "REPAIR" FUNCTION IN A USE/USER ENVIRONMENT IN ORDER TO RESTORE SERVICEABILITY TO A FAILED ITEM.

(1) Source Code. The source code tells you how you get an item needed for maintenance, repair, or overhaul of an end- item/equipment. Source codes are always the first two positions of the SMR code. Explanations of source codes follow:

XA - Do not requisition a "XA" -coded item. Order its next higher assembly. (Refer to the NOTE below.)

XB - If a "XB" item is not available from salvage, order it using the CAGE and part number.

XC - Installation drawing, diagrams, instruction sheet, field service drawing; identified by manufacturer's part number.

XD -Item is not stocked. Order an "XD" -coded item through normal supply channels using the CAGE and part number given, if no NSN is available.

Source Code	Application/Explanation
PA PB PC PD PE PF PG	Stocked items; use the applicable NSN to request/requisition items with these source codes. They are authorized to the level indicated by the code entered in-the 3rd position of the SMR code. **NOTE** **ITEMS CODED PC ARE SUBJECT TO DETERIORATION.**
KD KF KB	Items with these codes are not to be requested/requisitioned individually. They are part of a kit which is authorized to the maintenance level indicated in the 3rd position of the SMR Code. The complete kit must be requisitioned and applied.
MO - (Made at unit/AVUM Level) MF - (Made at DS/AVIM Level) MH - (Made at GS Level) ML - (Made at Specialized Repair Act) (SRA)	Items with these codes are not to be requisitioned individually. They must be made from bulk material which is identified by the paint number in the DESCRIPTION AND USABLE ON CODE (UOC) column and listed in the Bulk Material Group of the repair parts list of the RPSTL. If the item is authorized to you by the 3rd position code of the SMR code, but the source code indicates it is made at a higher level, order the item from the higher level of maintenance.
AO - (Assembled by unit/AVUM Level) AF - (Assembled by DS/AVIM Level) AH - (Assembled by GS Level) AL - (Assembled by SRA) AD - (Assembled by Depot)	Items with these codes are not to be requested/requisitioned by DS/AVIM individually. The parts that make up the assembled item must be requisitioned or fabricated and assembled at the level of maintenance indicated by the source code. If the 3rd position of the SMR code authorizes you to replace the item, but the source code indicates the item is assembled at a higher level, order the item from the higher level of maintenance.

NOTE

CANNIBALIZATION OR CONTROLLED EXCHANGE, WHEN AUTHORIZED, MAY BE USED AS A SOURCE OF SUPPLY FOR ITEMS WITH THE ABOVE SOURCE CODES, EXCEPT FOR THOSE SOURCE CODED "XA" OR THOSE AIRCRAFT SUPPORT ITEMS RESTRICTED BY REQUIREMENTS OF AR 750-1.

(2) Maintenance Code. Maintenance codes tell you the level(s) of maintenance authorized to use and repair support items. The maintenance codes are entered in the third and fourth positions of the SMR Code as follows:

(a) The maintenance code entered in the third position tells you the lowest maintenance level authorized to remove, replace, and use the item. The maintenance code entered in the third position will indicate authorization to one of the following levels of maintenance.

Maintenance Code		Application/Explanation
C	-	Crew or operator maintenance done within unit/AVUM maintenance.
O	-	Unit level/AVUM maintenance can remove, replace, and use the item.
F	-	Direct support/AVIM maintenance can remove, replace, and use the item.
H	-	General support maintenance can remove, replace, and use the item.
L	-	Specialized repair activity can remove, replace, and use the item.
D	-	Depot can remove, replace, and use the item.

(b) The maintenance code entered in the fourth position tells you whether or not the item is to be repaired and identifies the lowest maintenance level with the capability to do complete repair (perform all authorized repair functions).

NOTE

SOME LIMITED REPAIR MAY BE DONE ON THE ITEM AT A LOWER LEVEL OF MAINTENANCE, IF AUTHORIZED BY THE MAINTENANCE ALLOCATION CHART (MAC) AND SMR CODES.

Maintenance Code		Application/Explanation
O	-	Unit/AVUM level is the lowest level that can do complete repair of the item.
F	-	Direct Support/AVIM is the lowest level that can do complete repair of item.
H	-	General Support is the lowest level that can do complete repair of item.
L	-	Specialized Repair Activity (designate the specialized repair activity) is the lowest level that can do complete repair of the item.
D	-	Depot is the lowest level that can do complete repair of the item.
Z	-	Non-repairable. No repair is authorized.
B	-	No repair is authorized. No parts or special tools are authorized maintenance of "B" coded item. However, the item may be reconditioned by adjusting, lubricating, etc., at the user level.

(3) Recoverability Code. Recoverability codes are assigned to items to indicate the disposition action on unserviceable items. The recoverability code is shown in the fifth position of the SMR Codes.

Recoverability Code		Application/Explanation
Z	-	Non-repairable item. When unserviceable, condemn and dispose of the item at the level of maintenance shown in 3rd position of SMR Code,
O	-	Repairable item. When uneconomically repairable, condemn and dispose of the item at Unit Level.
F	-	Repairable item. When uneconomically repairable, condemn and dispose of the item at Direct Support Level.
H	-	Repairable item. When uneconomically repairable, condemn and dispose of the item at the General Support Level.
D	-	Repairable item. When beyond lower level repair capability, return to Depot. Condemnation and disposal of item not authorized below Depot Level.
L	-	Repairable item. Condemnation and disposal not authorized below Specialized Repair Activity (SRA).

A - Item requires special handling or condemnation procedures because of specific reasons (such as, precious metal content, high dollar value, critical materiel, or hazardous materiel). Refer to appropriate manuals/directives for specific instructions.

d. CAGE (Column (5)). The Commercial and Government Entity Code (CAGE) is a 5-digit code used to identify the manufacturer, distributor, or Government agency/activity, that supplies the item.

e. PART NUMBER (Column (6)). Indicates the primary number used by the manufacturer (individual, company, firm, corporation, or Government activity), which controls the design and characteristics of the item by means of its engineering drawings, specifications, standards and inspection requirements to identify an item or range of items.

f. NSN (Column (7)).

NOTE

WHEN YOU USE A NSN TO REQUISITION AN ITEM, THE ITEM YOU RECEIVE MAY HAVE A DIFFERENT PART NUMBER FROM THE NUMBER LISTED.

g. DESCRIPTION (Column (8)). This column includes the following information:

(1) The Federal item name, and when required, a minimum description to identify the item.

(2) Items that are included in kits and sets are listed below the name of the kit or set.

(3) Spare/repair parts that make up an assembled item are listed immediately following, the assembled Item Line Entry.

(4) Part numbers for bulk materials are referenced in this column in the Line Item Entity for the item to be manufactured/fabricated.

(5) The statement "END OF FIGURE" appears just below the last item description in Column (5) for a given figure in both Sections II and III.

(6) The physical security classification of the item is indicated by the parenthetical entry (insert applicable physical security classification abbreviation, e.g., Phy Sec Cl © - Confidential, Phy Sec Cl (S) -Secret, Phy Sec CI (T) Top Secret).

h. USABLE ON CODE (Column (9))

(1) The Usable On Code, where applicable (see para 5, Special Information).

i. QTY (Column (10)). The QTY (quantity per figure) column indicates the quantity of the item used in the breakout shown on the illustration/figure, which is prepared for a functional group, sub-functional group, or an assembly. A "V" appearing in this column instead of a quantity indicates that the quantity is variable and the quantity may vary from application to application.

F.4 EXPLANATION OF COLUMNS (Section IV)

a. National Stock Number (NSN) Index

(1) Stock number column. This column lists the NSN in National Item Identification Number (NIIN) sequence. The NIIN consists of the last nine digits of the NSN.

NSN i.e., **5305-01-674-1467** **NIIN**	When using this column to locate an item, ignore the first four digits of the NSN. Use the complete NSN (13 digits) when requisitioning items by stock number.

(2) FIG. Column. This column lists the number of the figure where the item is identified/located. The figures are in numerical order in Sections II and III.

(3) ITEM Column. The item number identifies the item associated with the figure listed in the adjacent FIG. column. This item is also identified by the NSN listed on the same line.

b. Part Number Index. Part numbers in this index are listed by part number in ascending alpha-numeric sequence (arrangement of letters and number combinations which place the first letter or digit of each group in order A thru Z, followed by the numbers 0 through 9 and each following letter or digit in like order).

(1) CAGE column. The Commercial and Government Entity Code (CAGE) is a 5-digit code used to identify the manufacturer, distributor, or Government agency/activity that supplies the item.

(2) PART NUMBER Column. Indicates the primary number used by the manufacturer (individual, firm corporation, or Government activity) which controls the design and characteristics of the item by means of its engineering drawings, specifications, standards, and inspection requirements to identify an item or range of items.

(3) STOCK NUMBER Column. This column lists the NSN for the associated part number and manufacturer identified in the PART NUMBER and CAGE columns to the left.

(4) FIGURE Column. This column lists the number of the figure where the item is identified/located in Sections II and III.

(5) ITEM Column. The item number is that number assigned to the item as it appears in the figure referenced in the adjacent figure number column.

c. Figure and Item Number Index

(1) FIGURE Column. This column lists the number of the figure where the item is identified/located in Sections II and III.

(2) ITEM Column. The item number is that number assigned to the item as it appears in the figure referenced in the adjacent figure number column.

(3) STOCK NUMBER column. This column lists the NSN for the item.

(4) CAGE Column. The Commercial and Government Entity Code (CAGE) is a 5-digit code used to identify the manufacturer, distributor, or Government agency/activity that supplies the item.

(5) PART NUMBER Column. Indicates the primary number used by the manufacturer (individual, firm corporation, or Government activity), which controls the design and characteristics of the item by means of its engineering drawings, specifications, standards, and inspection requirements to identify an item or range of items,

F.5 SPECIAL INFORMATION

a. Usable on Code. The usable on code appears in the lower left corner of the Description column heading. Usable on codes are shown as "UOC" in the Description Column (justified left) on the first line applicable item description/ nomenclature. Uncoded items are applicable to all models. Identification of the usable on codes used in the RPSTL are:

Code	Used On
MLC	MK 155 MOD 0
MLE	MK 155 MOD 3
MLF	MK 155 MOD 2

F.6 HOW TO LOCATE REPAIR PARTS

a. When National Stock Number or Part Numbers are Not Known:

(1) Using the table of contents, determine the assembly or subassembly group to which the item belongs. This is necessary since figures are prepared for assembly groups and subassembly groups, and listings are divided into the same groups.

(2) Find the figure covering the functional group or sub-functional group to which the item belongs.

(3) Identify the item on the figure and note the item number.

b. When National Stock Number or Part Number is Known:

(1) If you have the National Stock Number, look in the STOCK NUMBER column of the National Stock Number Index. The NSN is arranged in National Item Identification Number (NIIN) sequence (see para F.4a(1). Note the figure and item number next to the NSN.

(2) Turn to the figure and locate the item number. Verify that the item is the one you are looking for.

NOTE

IF YOU HAVE THE PART NUMBER, LOOK IN THE PART NUMBER COLUMN OF THE PART NUMBER INDEX. IDENTIFY THE FIGURE AND ITEM NUMBER, LOOK UP THE ITEM ON THE FIGURE IN SECTION II.

F.7 ABBREVIATIONS

All are common.

NOM	-	Nominal	MIN	-	Minimum
HGT	-	Height	CD	-	Cadmium
STL	-	Steel	CRMT	-	Chromate
THKNS	-	Thickness	IN	-	Inches
OA	-	Overall	L	-	Length
DIA	-	Diameter	MAX	-	Maximum

Section II. REPAIR PARTS LIST

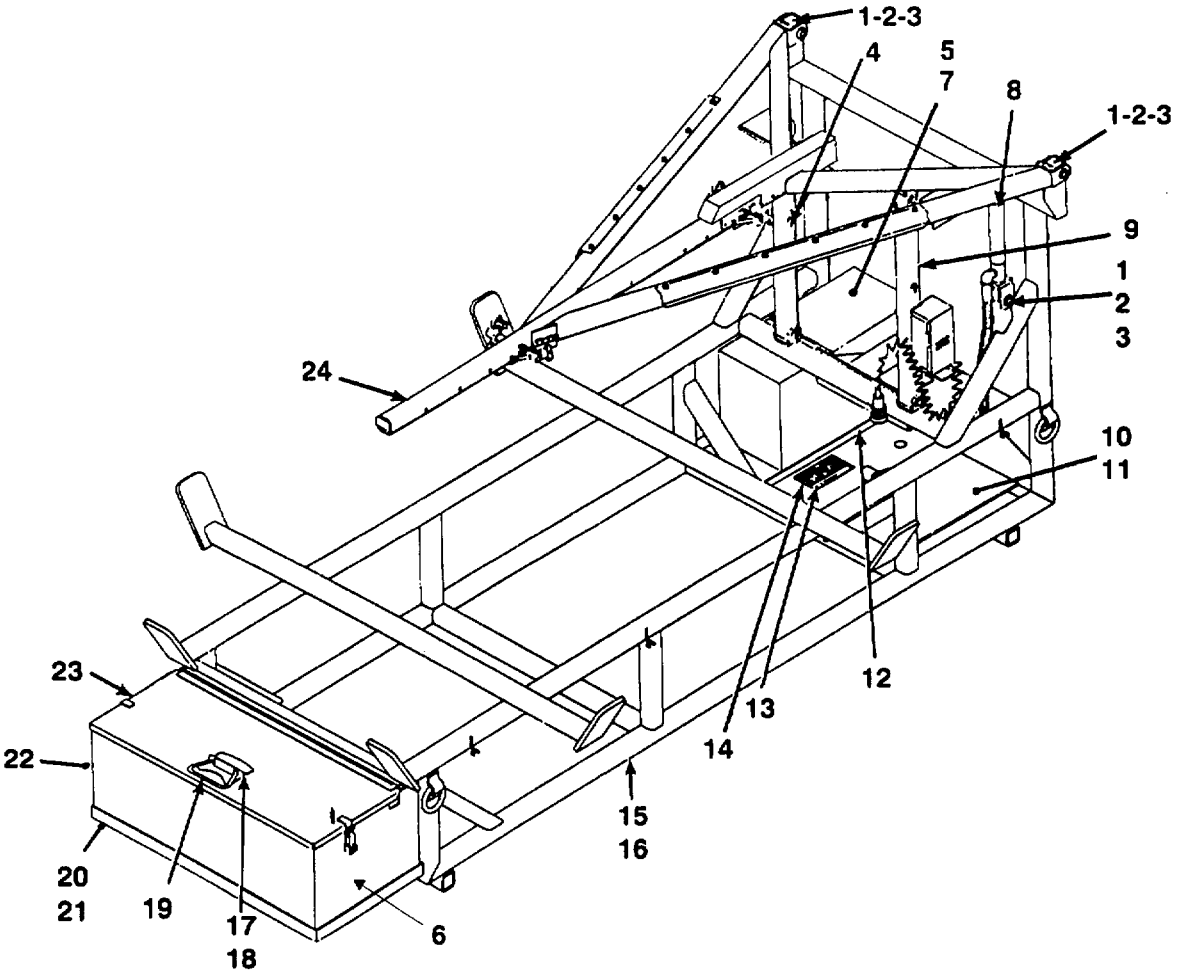

Figure F.1. MK 155 Launcher, Mine Clearing (82A5052A0000) MOD 0, (82A5052C0000) MOD 2, and (82A5052D000) MOD 3

Table F.1. Line Charge, Launcher Kit, Trailer; MK 155; DWG 82A5052"X"0000

FIG NO.	KEY NO.	ARMY SMR	MC SMR	CAGE	DWG OR P/N	NAT. STOCK NO.	DESCRIPTION	UOC	QTY
F.1	1	PAOZZ	PAOZZ	96906	MS20392-9C89	5315-00-904-2807	PIN, STRAIGHT, HEADED: CD AND CRMT OA, 0.093 IN. NOM HGT		2
F.1	2	PAOZZ	PAOZZ	96906	MS24665-372	6315-00-059-0491	PIN, COTTER; 1.125 LENGTH		2
F.1	3	PAOZZ	PAOZZ	88044	AN960-1016	5310-00-167-0825	WASHER, FLAT STL, 1.183 IN. MIN AND 1.208 IN. MAX OA DIA, 0.053 IN. MIN AND 0.073 IN. MAX THKNS		6
F.1	4	PAOFF	PAOFF	01365	82A5052B0305	1055-01-355-2261	TUBE ASSEMBLY, EXTENSION, ROCKET LAUNCHER-STARBOARD		1
F.1	5	AOOFF	NA	01365	82A5052A2100	NONE	SWITCH ASSEMBLY, SELECTOR	MLE/MLF	1
F.1	6	PAOFF	NA	01365	82A5052A2000	2540-01-342-6571	COUPLER, DRAWBAR, RING	MLE/MLF	1
F.1	7	XBOZZ	NA	01365	82A5052A2028	NONE	CASE, SELECTOR SWITCH	MLE/MLF	1
F.1	8	PAOZZ	PAOZZ	96906	MS20392-9C51	5315-00-269-4038	PIN, STRAIGHT, HEADED		2
F.1	9	PAOFF	PAOFF	01365	82A5052B0304	1055-01-354-9551	TUBE ASSEMBLY, TELESCOPING - PORT		1
F.1	10	NA	AFOFF	01365	82A5052A0500	NONE	HYDRAULICS ASSEMBLY	MLC	1
F.1	11	AFOFF	NA	01365	82A5052D0564	NONE	HYDRAULICS ASSEMBLY	MLE/MLF	1
F.1	12	PAOZZ	NA	01365	82A5052A2025-1	5306-01-343-1748	BOLT, U		3
F.1	13	PAOZZ	PAOZZ	81349	M24243/1-D506	5320-00-850-3225	RIVET, BLIND STL OA, 0.156 IN. NOM SHK DIA, 0.039 IN. NOM HD HGT.		4
F.1	14	PAOZZ	PAOZZ	96906	MS-90495	9905-00-577-4219	PLATE, IDENTIFICATION		1
F.1	15	NA	XBFFF	01365	82A5052A0100	NONE	FRAME WELDMENT ASSEMBLY	MLC	1
F.1	16	XBFZZ	NA	01356	82A5052B0100	NONE	FRAME WELDMENT ASSEMBLY	MLE/MLF	1
F.1	17	PAOZZ	PAOZZ	81349	M24243/1-D502	5320-00-850-3248	RIVET, BLIND: (ON HANDLE)		2
F.1	18	PAOZZ	PAOZZ	81349	M24243/1-D604	5320-00-850-3233	RIVET, BLIND: (ON HASP AND ON HINGE)		4
F.1	19	PAOZZ	PAOZZ	96906	MS35793-1	5340-00-843-5740	HANDLE, BAIL: STL, 4.500 IN. NOM INS LG, 0.155 IN. NOM HOLE DIA.		1
F.1	20	XDOOO	XBOOO	01365	82A5052A0120	NONE	CONTAINER, STORAGE WELDMENT	MLC/MLC	1
F.1	21	XDOOO	NA	01365	82A5052B0120	NONE	CONTAINER, STORAGE WELDMENT	MLE	1
F.1	22	PAOZZ	PAFFF	01365	82A5052A0800	6150-01-221-5866	CABLE ASSEMBLY - SWITCH, ELECTRICAL	MLC	1
F.1	23		XCOOO	01365	82A5052D0035	NONE	CONTENTS, CONTAINER		1
F.1	24	PAOOO	PAOOO	01365	82A5052B0225	1055-01-347-2655	RAIL ASSEMBLY, LAUNCHER		1

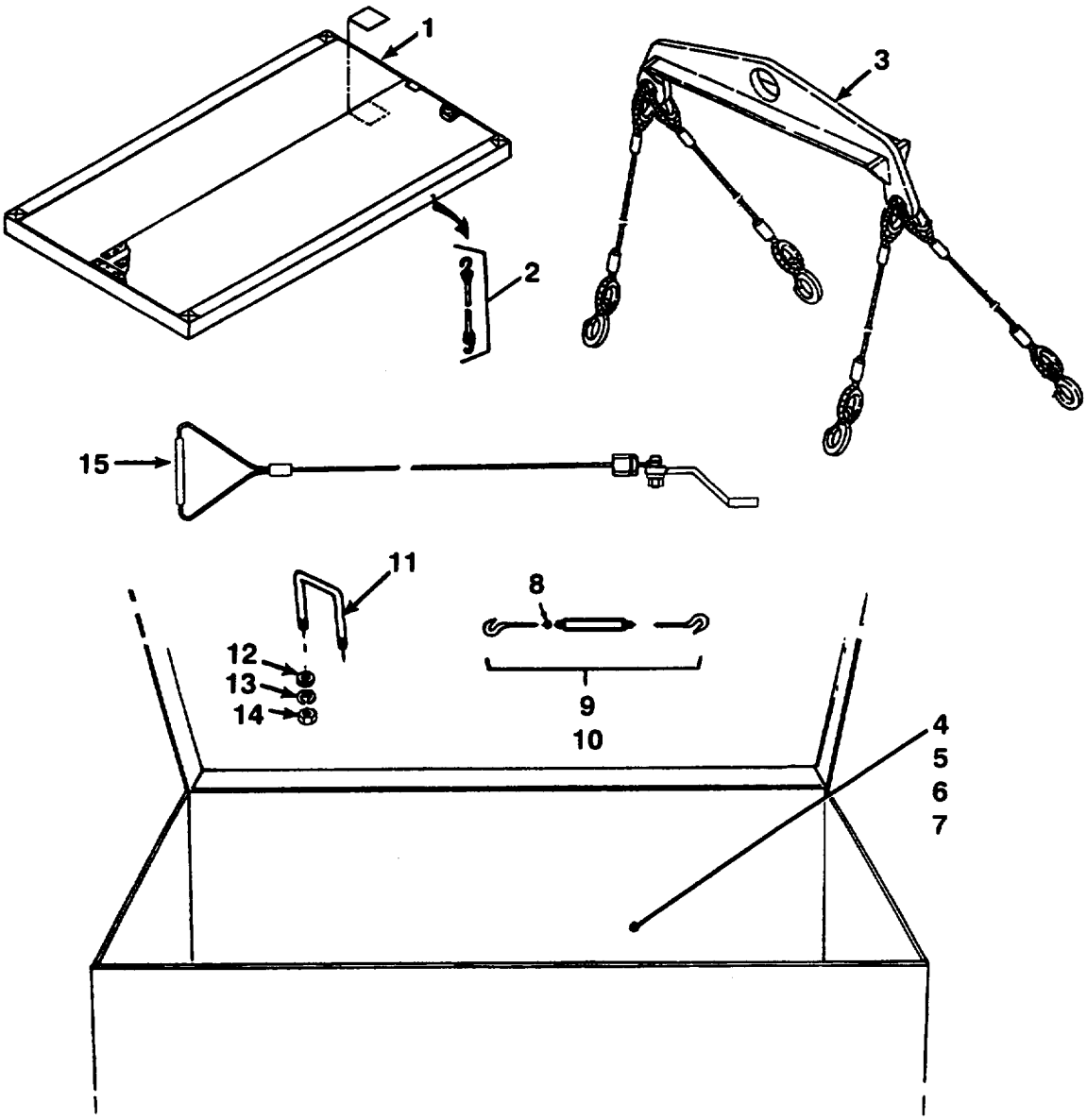

Figure F.2. Contents, Container

Table F.2. Contents, Container; DWG 82A5052D0035

FIG NO.	KEY NO.	ARMY SMR	MC SMR	CAGE	DWG OR P/N	NAT. STOCK NO.	DESCRIPTION	UOC	QTY
F.2	1	PAOZZ	PAOOO	01365	82A5052A0700	1055-01-216-9423	COVER, PROTECTIVE, ROCKET LAUNCHER		1
F.2	2	XBOZZ	XBOZZ	01365	82A5052A0702	NONE	SHOCK CORD		8
F.2	3	PAOZZ	PAOZZ	01365	82A5052A0360	3940-01-218-2823	SLING, BEAM TYPE		1
F.2	4	PAOZZ	PAOZZ	39428	3559T51	4030-01-136-4535	SHACKLE: (NOT ILLUSTRATED)	MLE/MLF	2
F.2	5	PAOZZ	PAOZZ	96906	MS35691-7	5310-00-840-5785	NUT, PLAIN, HEXAGON 0.250-28 UNF, 0.150 IN. MIN AND 0.163 IN. MAX HGT, 0.428 IN. MIN AND 0.438 IN. MAX WAS (NOT ILLUSTRATED)		3
F.2	6	PAOZZ	PAOZZ	19203	9227694	4925-00-999-3454	TEST SET, BLASTING CAP: (NOT ILLUSTRATED)		1
F.2	7	PAOZZ	PAOZZ	19200	9312773	1375-00-567-0223	BLASTING MACHINE: 18.625 IN. OA NOM LG, 16.625 IN. OA NOM WD, 13.115 IN. OA NOM HGT (NOT ILLUSTRATED)		1
F.2	8	PAOZZ	PAOZZ	96906	MS27952-15	5310-00-246-0128	NUT, PLAIN, HEXAGON: 1.0 IN		4
F.2	9	PAOZZ	PAOZZ	81349	FFT791TYPE 1 FORM 1 CLASS5-1X6	5340-01-248-7962	TURNBUCKLE: 1.0 IN. DIA X 6.0 IN. L		2
F.2	10	PAOZZ	PAOZZ	81349	FFT791TYPE1 FORM 1 CLASS5-1X12	5340-01-249-0589	TURNBUCKLE: 1.0 IN DIA X 12.0 IN L		2
F.2	11	PAOZZ	PAOZZ	01365	82A5052A0005	5306-01-226-8720	BOLT, U: 0.625 IN -11 UNC-2A STL OA 1.440 IN. MAX LG (TO BE USED TO ATTACH TO TRAILER)		4
F.2	12	PAOZZ	PAOZZ	96906	M516212-15	5310-00-491-5895	WASHER, FLAT: .625 NOM		8
F.2	13	PAOZZ	PAOZZ	96906	MS35338-145	5310-00-937-0453	WASHER, LOCK: .625 NOM		8
F.2	14	PAOZZ	PAOZZ	96906	MS51971-7	5310-00-764-6609	NUT, PLAIN, HEXAGON: 0.625 IN.-1 1 UNC-2B, 0.525 IN. MIN AND 0.559 IN. MAX HGT, K 0.922 IN. MIN AND 0.9375 IN. MAX WAF		8
F.2	15	NA	AFOFF	01365	82A5052A0025	NONE	LANYARD ASSEMBLY	MLC	1

THIS PAGE INTENTIONALLY LEFT BLANK

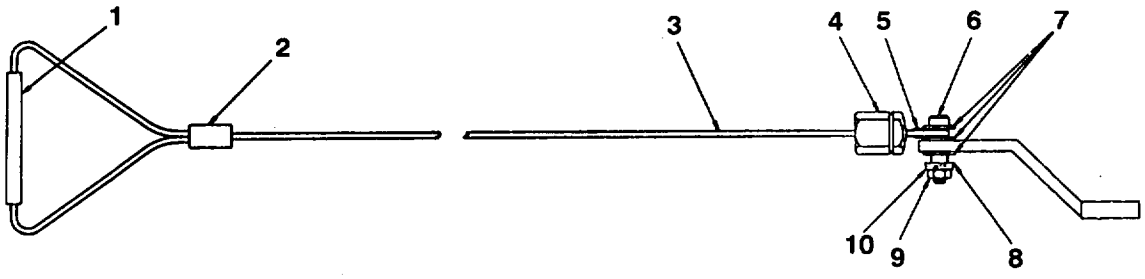

Figure F.3. Lanyard Assembly

Table F.3. Lanyard Assembly; DWG 82A5052A0025

FIG NO.	KEY NO.	ARMY SMR	MC SMR	CAGE	DWG OR P/N	NAT. STOCK NO.	DESCRIPTION	UOC	QTY
F.3	1	NA	XBOZZ	64696	5052A000J65	NONE	HANDLE	MLC	1
F.3	2	NA	PAOZZ	96906	MS51844-24	4030-00-062-7780	SWAGING SLEEVE, WIRE ROPE: 0.340 IN. NOM OA WD, 0.750 IN. NOM OA LG, 0.512 IN. NOM OA HGT	MLC	1
F.3	3	NA	PAOZZ	81348	RRW410	4010-00-641-6183	STRAND, WIRE: STL COMP 305 OA, 0.125 IN. MIN AND 0.141 IN. MAX DIA. ZINC OA	MLC	1
F.3	4	NA	PAOZZ	96906	MS16843-1	4030-00-838-3533	CLAMP, WIRE ROPE, THREADED: STL, 0.125 IN. NOM DIA	MLC	1
F.3	5	NA	PAOZZ	88044	AN100C4	4030-00-262-1890	THIMBLE, ROPE: CRES, 0.360 IN. NOM INS WD, 0.703 IN. NOM INS LG	MLC	1
F.3	6	NA	PAOZZ	96906	MS51975-10	5305-00-914-3819	SCREW, SHOULDER .312 DIA SHLDR X .75, L	MLC	1
F.3	7	NA	PAOZZ	96906	MS15795-812	5310-00-625-5756	WASHER, FLAT: .344" ID	MLC	3
F.3	8	NA	PAOZZ	96906	M35338-139	5310-00-933-8121	WASHER, LOCK: .250 NOM	MLC	1
F.3	9	NA	PAOZZ	96906	MS35649-2254	5310-00-250-9477	NUT, PLAIN, HEXAGON: 0.250 IN.-20 UNC-2B, RH, 0.423 IN. MIN AND 0.437 IN. MAX WAF	MLC	1
F.3	10	NA	PAOZZ	96906	MS15795-810	5310-01-091-1248	WASHER, FLAT: 0.620 IN. AND 0.640 IN. MAX OA DIA, 0.051 IN. MIN AND 0.080 N. MAX THKNS	MLC	1

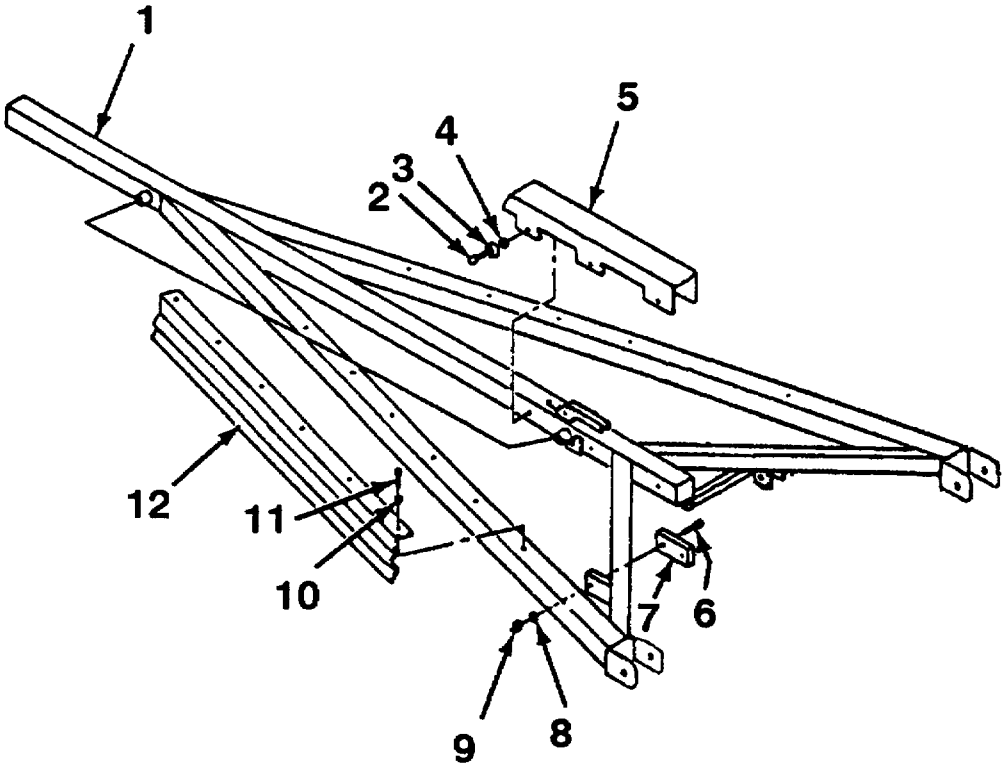

Figure F.4. Launcher, Rail Assembly (Sheet 1 of 2)

Table F.4. Launcher Rail Assembly; DWG 82A5052B0225 (Sheet 1 of 2)

FIG NO.	KEY NO.	ARMY SMR	MC SMR	CAGE	DWG OR P/N	NAT. STOCK NO.	DESCRIPTION	UOC	QTY
F.4	1	PAOZZ	PAOFF	01365	82A5052A0200	1055-01-218-9099	RAIL, LAUNCHER: STL TUBING 2X2X0.250, 40.370 IN. W; 82.000 IN. LG		1
F.4	2	PAOZZ	PAOZZ	96906	MS35307-303	5305-00-719-3997	SCREW, CAP, HEXAGON HEAD		6
F.4	3	PAOZZ	PAOZZ	96906	MS35338-139	5310-00-933-8121	WASHER, LOCK: .250 NOM		6
F.4	4	PAOZZ	PAOZZ	80205	NAS620C416	5310-00-952-0309	WASHER, FLAT .250 NOM		9
F.4	5	XBOZZ	XBOZZ	01365	82A5052A0011	NONE	COVER		1
F.4	6	PAOZZ	PAOZZ	96906	MS24671-16	530-00-990-8348	SCREW, CAP, SOCKET HEAD: 0.164 IN 32 UNC-3A; RH, 0.734 IN. MIN AND IN. - 0.766 IN. MAX LG, PSVT OA, 0.937 IN. MON WAF		2
F.4	7	PAOZZ	PAOZZ	50926	82A5052A0010	6605-01-234-7441	CLINOMETER, SHIP SCALE READING OF 55 DGR X 0 DGR X 55 DGR 5 DGR GRADUATION; 6 IN LG; 2,500 IN HGT.		1
F.4	8	PAOZZ	PAOZZ	00724	24-00157-823	5310-01-067-9589	WASHER, LOCK: STL, BLACK, 0.293 IN NOM OD		2
F.4	9	PAOZZ	PAOZZ	96906	MS35649-284	5310-00-934-9759	NUT, MAIN, HEXAGON: CRES OA, 0.164 IN-32 UNC-2B, RH, 0.332 IN. MIN AND 0.334 IN. MAX WAF		2
F.4	10	PAOZZ	PAOZZ	96906	MS15795-810	5310-01-091-1248	WASHER, FLAT: 0.620 IN. MIN AND 0.640 IN. MAX OA DIA, 0.051 IN. MIN AND 0.080 IN. MAX THKNS		12
F.4	11	PAOZZ	PAOZZ	96906	MS16895-47	53050-990-0675	SCREW, CAP, HEXAGON HEAD		12
F.4	12	PAOZZ	PAOZZ	01365	82A5052A0001	1055-01-219-9265	SHEATH, CABLE, LAUNCH: STL STOCK CRE; 0.037 IN THK; 32,006 IN. L, 1.700 IN. WD		2

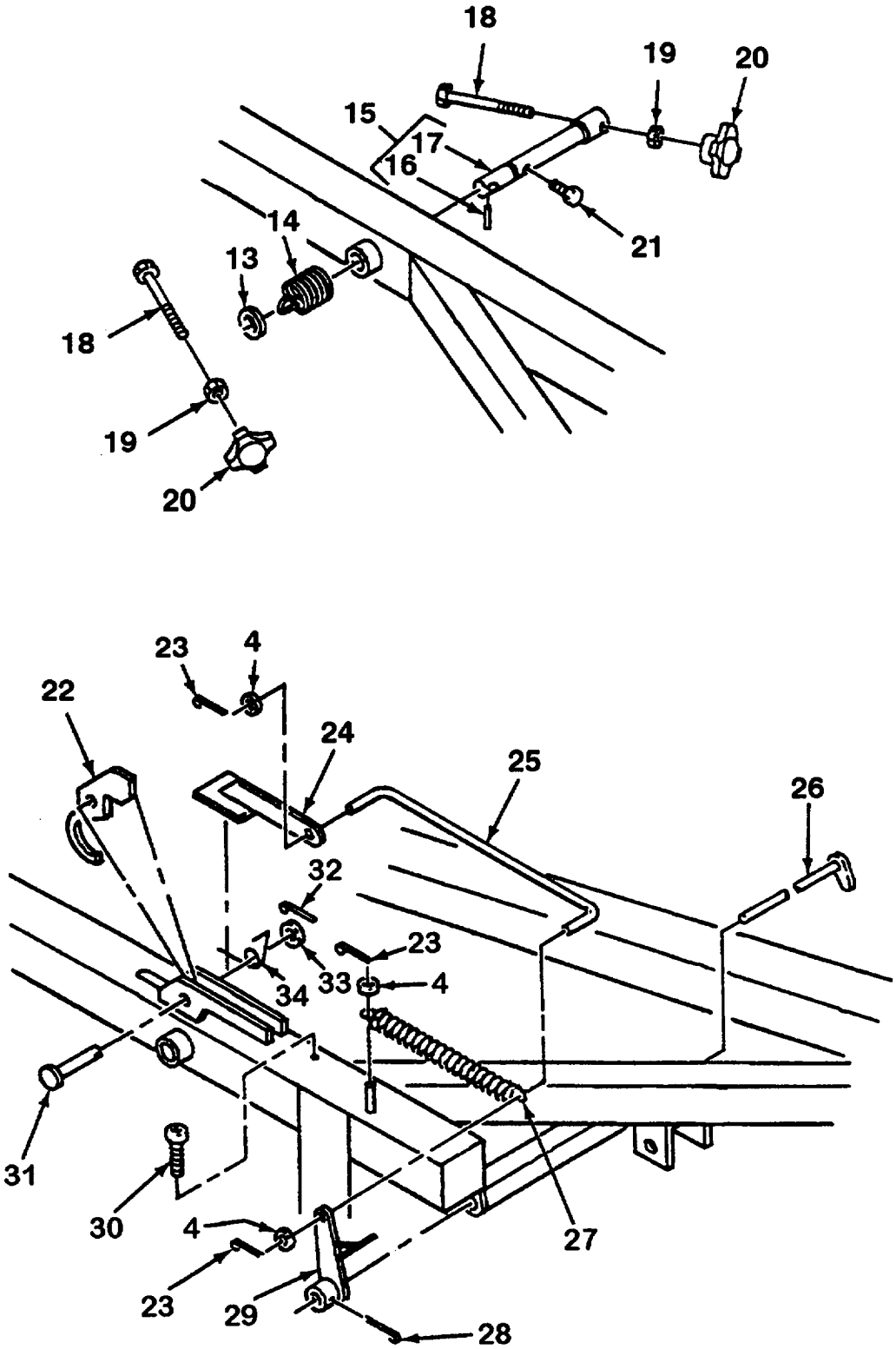

Figure F.4. Launcher, Rail Assembly (Sheet 2 of 2)

Table F.4. Launcher Rail Assembly; DWG 82A5052B0225 (Sheet 2 of 2)

FIG NO.	KEY NO.	ARMY SMR	MC SMR	CAGE	DWG OR P/N	NAT. STOCK NO.	DESCRIPTION	UOC	QTY
F.4	13	PAOZZ	PAOZZ	96906	MS16624-1068	5365-00-810-8932	RING, RETAINING: STL, 0.625 IN. MIN AND 0.640 IN. MAX ID, 0.040 IN. MIN AND 0.044 IN. MAX THKNS		2
F.4	14	PAOZZ	PAOZZ	01365	82A5052A0003	5360-01-220-3312	SPRING, HELICAL, TORSION: STL, COMP 302, COND B		2
F.4	15	AOOOO	AOOOO	01365	82A5052A0340	NONE	CROSSPIECE ASSEMBLY		2
F.4	16	PAOZZ	PAOZZ	96906	MS16555-645	5315-00-087-9553	PIN, STRAIGHT, HEADLESS: STL, PSVT OA 1.490 IN. MIN AND 1.510 IN. MAX OA LG. 0.1876 IN. MIN AND 0.1878 IN. MAX OA DIA		2
F.4	17	PAOZZ	PAOZZ	01365	82A5052A0341	1055-01-241-2449	CROSSPIECE: 7.500 IN. OA LG, STOCK SIZE MIN 0.730 IN. LG, MAX 1.000 IN LG; CLASS 304		2
F.4	18	PAOZZ	PAOZZ	01365	82A5052A0002	5306-01-218-8741	BOLT, MACHINE: STL, COMP 316 OA 0.375 IN-16 UNC-2A, RH, PSVT		4
F.4	19	PAOZZ	PAOZZ	96906	MS51971-3	5310-00-913-8881	NUT, PLAIN, HEXAGON: 0.375 IN.-16 UNC-2B, RH, PSVT OA, 0.551 IN. MIN AND 0.5625 IN. MAX WAF		4
F.4	20	PAOZZ	PAOZZ	99862	CL30-HK-4A	5340-01-234-5848	HANDLE, MANUAL CONTROL		4
F.4	21	PAOZZ	PAOZZ	96906	MS35308-306	5305-00-685-3511	SCREW, CAP, HEXAGON HEAD .250-28 UNC-2A X 7.50 LG		2
F.4	22	PAOZZ	PAOZZ	01365	82A5052A0016	3040-01-219-6245	PAWL: STL, PSVT, CLASS 304,2.680 IN. NOM OA LG		1
F.4	23	PAOZZ	PAOZZ	96906	MS24665-151	5315-00-815-1405	PINCOTTE: .062 X .50 LG		3
F.4	24	XBOZZ	XBOZZ	01365	82A5062A0015	NONE	BLOCK, SLIDING		1
F.4	25	PAOZZ	PAOZZ	01365	82A5052A0013	3040-01-221-7824	CONNECTING LINK, RIG ID: STL, CLASS 304, PASSIVATED, 8.688 IN. NOM OA LG		1
F.4	26	PAOZZ	PAOZZ	01365	82A5052A0019	1055-01-218-9098	CAM, ACTUATING: STL, CRE; 11.060 IN. LG; 2.440 IN. WD; ROD DIA 0.500 IN.; CAM 0.250 IN. THICK; PASSIVATED		1
F.4	27	PAOZZ	PAOZZ	84830	LE-063F-5SS	5360-01-239-1431	SPRING, HELICAL, EXTENSION: .625 10 X 3.0, .062 DIA WIRE		1

THIS PAGE INTENTIONALLY LEFT BLANK

Table F.4. Launcher Rail Assembly; DWG 82A5052B0225 (Sheet 2 of 2) (Cont)

FIG NO.	KEY NO.	ARMY SMR	MC SMR	CAGE	DWG OR P/N	NAT. STOCK NO.	DESCRIPTION	UOC	QTY
F.4	28	PAOZZ	PAOZZ	96906	MS24665-370	5315-00-236-8359	PIN, COTTER .125 X 1.25 LG		1
F.4	29	PAOZZ	PAOZZ	01365	82A5052A0017	5340-01-221-8770	HANDLE, MANUAL CONTROL: CRES, 3.750 IN. OA LG, 2.000 IN. WD		1
F.4	30	PAOZZ	PAOZZ	96906	MS16995-35	5305-00-988-7607	SCREW, CAP, SOCKET HEAD: .190-20 UNC-3A X .38 LG		1
F.4	31	PAOZZ	PAOZZ	96906	MS20392-7C41	5315-00-070-3027	PIN, STRAIGHT, HEADED STL, 0.495 IN MIN AND 0.497 IN MAX DIA; 0.093 IN. NOM HGT		1
F.4	32	PAOZZ	PAOZZ	96906	MS9245-47	5315-00-664-7911	PIN, COTTER: STL, COMP 321 OA, 0.094 IN. NOM DIA.		1
F.4	33	PAOZZ	PAOZZ	1365	82A5052A0012	5310-01-217-7829	WASHER, FLAT		1
F.4	34	PAOZZ	PAOZZ	1365	82A5052A0014	5380-01-225-2719	SPRING, HELICAL, TORSION: STL, COMP 302, COND b, PASSIVATED		1

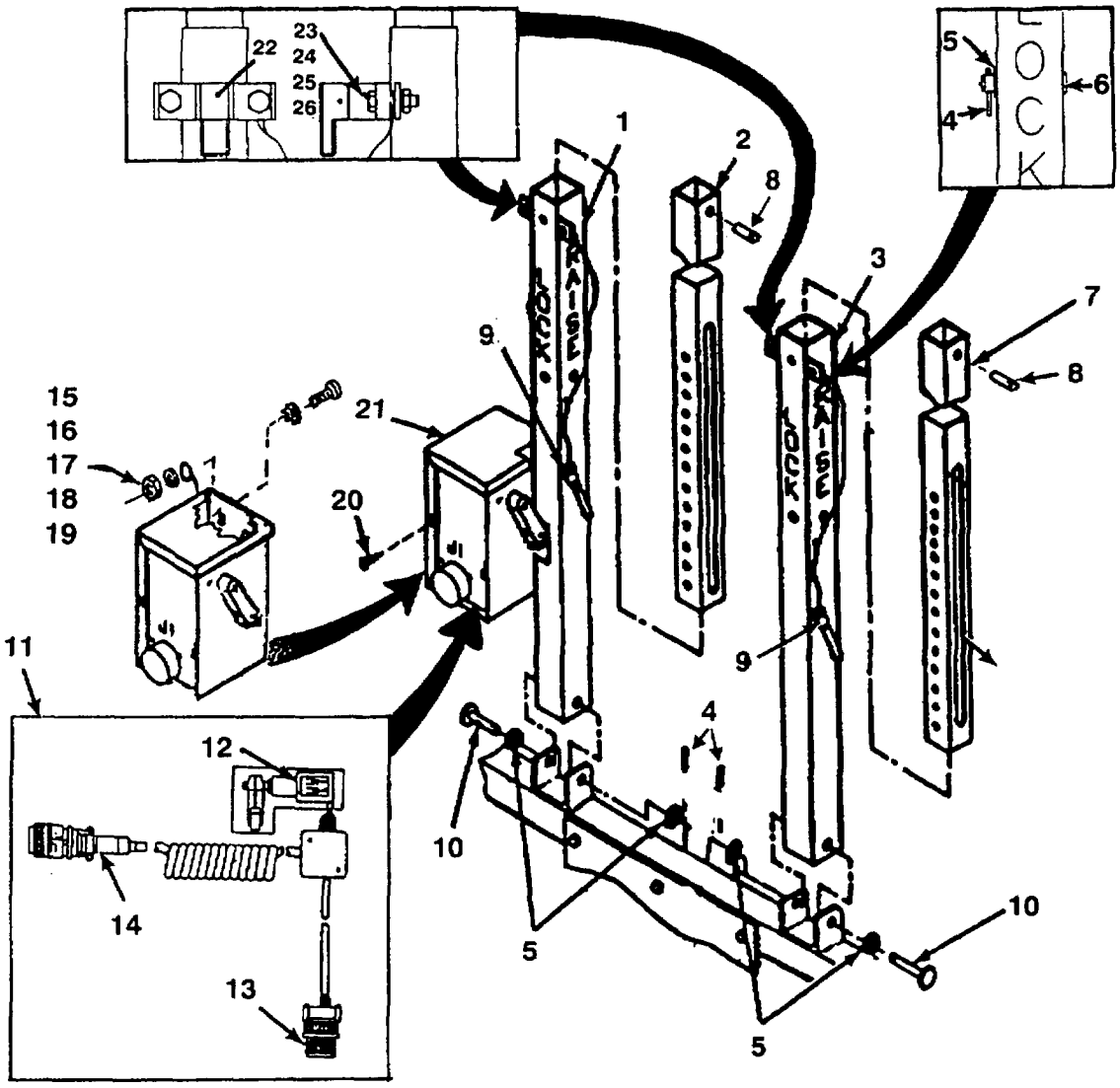

Figure F.5. Port and Starboard Telescoping Tube Assembly

Table F.5. Starboard and Port Telescoping tube Assembly; DWG 82A5052B0304 and 82A5052B0305

FIG NO.	KEY NO.	ARMY SMR	MC SMR	CAGE	DWG OR P/N	NAT. STOCK NO.	DESCRIPTION	UOC	QTY
F.5	1	PAOZZ	NA	01365	82A5052A0330	1055-01-216-9373	TUBING WELDMENT SAFETY		1
F.5			XAOZZ	01365	82A5052B0330	NONE	SWITCH (PORT)		
F.5	2	PAOZZ	PAOZZ	01365	82A5052A0310	1055-01-216-9372	TUBING WELDMENT (PORT)		1
F.5	3	PAOZZ	NA	01365	82A5052A0320	1055-01-216-9371	TUBING WELDMENT		1
F.5			XBOZZ	01365	82A5052B0320	NONE	(STARBOARD)		
F.5	4	PAOZZ	PAOZZ	96906	MS9245-47	5315-00-664-7911	PIN, COTTER: STL, COMP 321 OA, 0.094 IN. NOM DIA. (STARBOARD)		3
F.5	5	PAOZZ	PAOZZ	88044	AN960-716	5310-00-167-0822	WASHER, FLAT (STARBOARD)		5
F.5	6	PAOZZ	PAOZZ	96906	MS20392-6C63	5315-01-231-3396	PIN, STRAIGHT, HEADED (PORT AND STARBOARD)		2
F.5	7	PAOZZ	NA	01365	82A5052A0313	1055-01-216-9374	TUBING WELDMENT		1
F.5			XBOZZ	01365	82A5052B0313	NONE	(STARBOARD)		
F.5	8	PAOZZ	PAOZZ	96906	MS20392-6C73	5315-00-903-6754	PIN, STRAIGHT, HEADED (PORT AND STARBOARD)		2
F.5	9	PAOZZ	PAOZZ	01365	82A5052A0324	5340-01-230-0093	PIN, QUICK RELEASE (PORT AND STARBOARD)		2
F.5	10	PAOZZ	PAOZZ	96906	MS20392-6C81	5315-00-943-2061	PIN, STRAIGHT, HEADED (PORT AND STARBOARD)		2
F.5	11	PAFFF	PAFFF	01365	82A5052A0600	5930-01-218-4673	SWITCH, SAFETY, FIRING (PORT)		1
F.5	12	XAFZZ	XAFZZ	96906	MS21320-3	NONE	SWITCH, SENSITIVE (PORT)		1
F.5	13	PAFZZ	PAFZZ	96906	MS3100R22-10P	5935-00-837-6020	CONNECTOR, RECEPTACLE, ELECTRICAL (PORT)	1	
F.5	14	PAFZZ	PAOZZ	96906	MS3106F22-10S	5935-00-451-7564	CONNECTOR, PLUG, ELECTRICAL (PORT)		1
F.5	15	PAFZZ	PAOZZ	88044	AN960C10	5310-00-167-0801	WASHER FLAT (PORT)		3
F.5	16	PAFZZ	PAOZZ	96906	MS35338-138	5310-00-933-8120	WASHER, LOCK (PORT)		3
F.5	17	PAOZZ	PAOZZ	96906	MS35649-204	5310-00-934-9760	NUT, PLAIN, HEXAGON (PORT)		3
F.5	18	PAFZZ	PAOZZ	96906	MS51957-69	5305-00-050-9235	SCREW, MACHINE (PORT) 0.190 IN 24 UNC-2A		3
F.5	19	PAFZZ	PAOZZ	96906	MS21322-35	5340-00-419-0840	CLAMP, LOOP (PORT)		1
F.5	20	PAOZZ	PAOZZ	96906	MS24630-10	5305-00-753-7171	SCREW, TAPPING (PORT) 0.250 IN. NOM, COMP 410 OA		1
F.5	21	PAOZZ	XBOOO	01365	82A5052A0370	5340-01-433-2327	COVER ASSEMBLY, SAFETY SWITCH (PORT)		1
F.5	22	PAOZZ	PAOZZ	01365	82A5052A0400	1055-01-216-9370	DETENT ASSEMBLY (PORT AND STARBOARD)		2

THIS PAGE INTENTIONALLY LEFT BLANK

Table F.5. Starboard and Port Telescoping Tube Assembly; DWG 82A5052B0304 AND 82A5052S0305 (Cont)

FIG NO.	KEY NO.	ARMY SMR	MC SMR	CAGE	DWG OR P/N	NAT. STOCK NO.	DESCRIPTION	UOC	QTY
F.5	23	PAOZZ	PAOZZ	96906	MS35307-335	5306007208260	BOLT, MACHINE (PORT AND STARBOARD) 0.312 IN.-1 UNC-2A		2
F.5	24	PAOZZ	PAOZZ	96906	MS35332-140	5310-00-974-6623	WASHER, LOCK (PORT AND STARBOARD)		2
F.5	25	PAOZZ	PAOZZ	96906	MS35649-2314	5310-00-245-3615	NUT, PLAIN, HEXAGON (PORT AND STARBOARD)		2
F.5	26	PAOZZ	PAOZZ	88044	AN960-1016	5310-00-167-0825	WASHER, FLAT STL, 1.183 IN. MIN AND 1.208 IN. MAX OA DIA, 0.053 IN. MIN AND 0.073 IN. MAX THKNS (PORT AND STARBOARD)		2

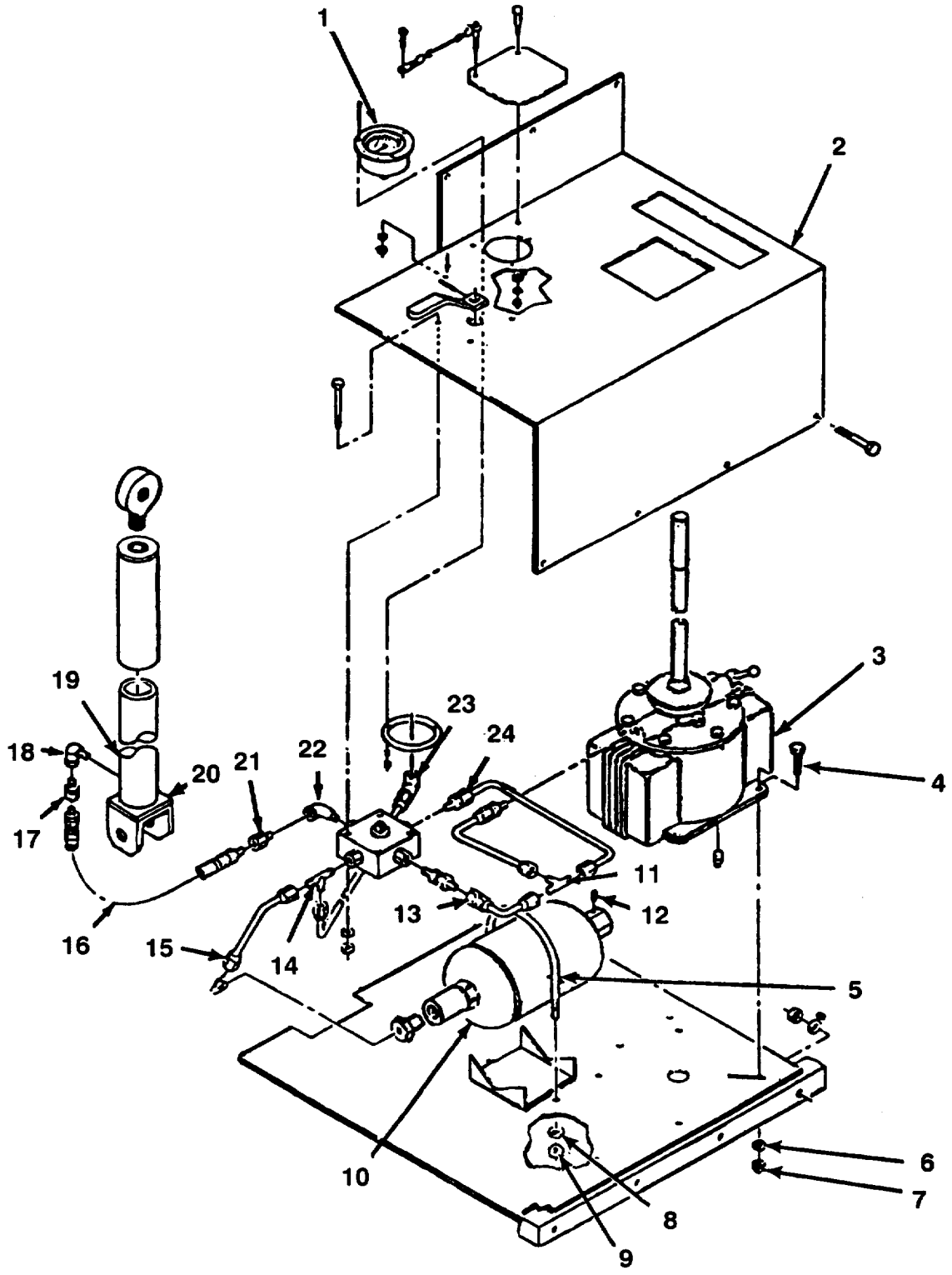

Figure F.6. Hydraulics Assembly: MOD 0

Table F.6. Hydraulics Assembly, Mods 0; DWG 82A5052A0500

FIG NO.	KEY NO.	ARMY SMR	MC SMR	CAGE	DWG OR P/N	NAT. STOCK NO.	DESCRIPTION	UOC	QTY
F.6	1	NA	PAOZZ	01365	82A5052A0511	6685-01-236-1384	GAGE, PRESSURE, DIAL INDICATING	MLC	1
F.6	2	NA	PAOOO	01365	82A5052C0517	1440-01-424-8405	COVER WELDMENT	MLC	1
F.6	3	NA	PAOFF	01365	82A5052A0502	4320-01-072-4918	PUMPING UNIT, HYDRAULIC, HAND DRIVEN	MLC	1
F.6	4	NA	PAOZZ	96906	MS16208-53	5306-00-543-5570	BOLT, MACHINE 0.375 IN.-16 UNC-2A.	MLC	4
F.6	5	NA	PAOZZ	39428	3043T47	5306-01-288-5715	U-BOLT, ACCUMULATOR	MLC	1
F.6	6	NA	PAOZZ	96906	MS51415-7	5310-01-218-7137	WASHER, LOCK	MLC	4
F.6	7	NA	PAOZZ	96906	MS51971-3	5310-00-913-8881	NUT, PLAIN, HEXAGON : 0.375 IN.-16 UNC-28, RH, PSVT OA, 0.551 IN. MIN AND 0.5625 IN. MAX WAF	MLC	4
F.6	8	NA	PAOZZ	96906	MS51415-9	5310-01-216-7390	WASHER, LOCK	MLC	2
F.6	9	NA	PAOZZ	96906	MS51971-5	5310-00-768-0321	NUT, PLAIN, HEXAGON	MLC	2
F.6	10	NA	PAOFF	01365	82A5052A0501	3040-01-218-6145	ACCUMULATOR, HYDRAULIC	MLC	1
F.6	11	NA	PAOZZ	96906	MS51811-3SSB	4730-00-837-8859	TEE, TUBE	MLC	1
F.6	12	NA	PAOZZ	96906	MS51021-112	5305-01-007-1517	SETSCREW: 0.138 IN.-32 UNC-3A	MLC	1
F.6	13	NA	PAOZZ	01365	82A5052A0509	4730-00-720-3913	ADAPTER, STRAIGHT, PIPE-TO-TUBE: .25 IN. NPTF, .25 O.D. TUBE, SST	MLC	1
F.6	14	NA	PAOZZ	96906	MS51824-5SS	4730-01-141-4132	TEE, PIPE TO TUBE	MLC	1
F.6	15	NA	PAOZZ	96906	MS51815-5SS	4730-00-892-4587	ELBOW, PIPE TO TUBE	MLC	1
F.6	16	NA	PAOZZ	01365	82A5052A0506	4720-01-222-8712	HOSE ASSEMBLY, NONMETALLIC	MLC	1
F.6	17	NA	PAOZZ	01365	82A5052A0500-52	5310-01-240-7847	SWIVEL NUT ADAPTOR, .25 MALE X .25 FEMALE	MLC	1
F.6	18	NA	PAOZZ	01365	82A5052A0507	4730-01-219-4277	ELBOW, PIPE: CRES OA - .250 IN. MALE/FEM	MLC	1
F.6	19	NA	PAOFF	01365	82A5052A0503	3040-01-237-7045	CYLINDER, ACTUATING, LINEAR	MLC	1
F.6	20	NA	PAOZZ	01365	82A5052A0350	5340-01-420-7647	CLEVIS, ROD WELDMENT	MLC	1
F.6	21	NA	PAOZZ	01365	82A5052A0505	6685-01-221-8778	DAMPENER, FLUID PRESSURE	MLC	1
F.6	22	NA	PAOZZ	01365	82A5052A0508	4730-01-116-0429	ELBOW, PIPE: .25 IN- .25 IN MALE, .25 IN FEM, SST	MLC	1
F.6	23	NA	PAOZZ	81343	4-4 080203SA	4730-00965-1232	ELBOW, PIPE TO TUBE: .25 IN NPTF, .25 IN O.D. TUBE SST	MLC	1
F.6	24	NA	PAOZZ	96906	MS51819-5SS	4730-00-720-2007	ADAPTER, STRAIGHT, PIPE TO TUBE	MLC	2

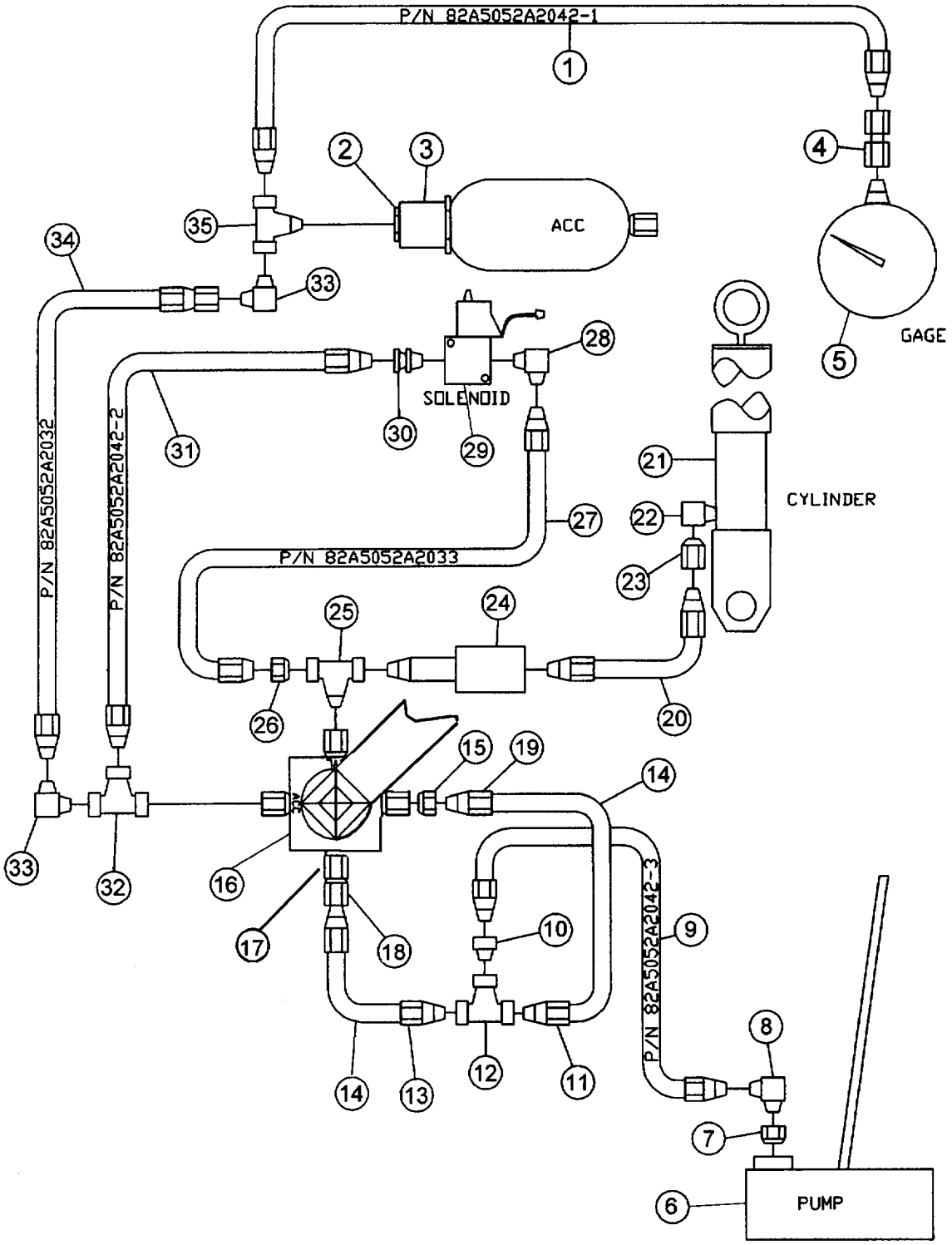

Figure F.7. Hydraulics Assembly MOD 2/3 (Sheet 1 of 2)

Table F.7. Hydraulic Assembly, Mod 3; DWG 82A5052D0564 (Sheet 1 of 2)

FIG NO.	KEY NO.	ARMY SMR	MC SMR	CAGE	DWG OR P/N	NAT. STOCK NO.	DESCRIPTION	UOC	QTY
F.7	1	PAOZZ	NA	01365	82A5052A2042-1	4730-01-342-0587	ADAPTOR, STRAIGHT, PIPE TO HOSE	MLE/MLF	1
F.7	2	PAOZZ	NA	81343	12-4 130140CA	4730-01-345-4083	BUSHING, PIPE: 3/4 NPT 1/4 NPT F	MLE/MLF	2
F.7	3	PAOZZ	NA	01365	82A5052A0501	3040-01-218-6145	ACCUMULATOR, HYDRAULIC	MLE/MLF	1
F.7	4	PAOZZ	NA	81343	4-4 140131C	4730-01-007-7158	UNION PIPE	MLE/MLF	1
F.7	5	PAOZZ	NA	01365	82A5052A0511	6685-01-236-1384	GAGE, PRESSURE DIAL INDICATING	MLE/MLF	1
F.7	6	PAOFF	NA	01365	82A5052A0502	432001-072-4918	PUMPING UNIT, HYDRAULIC HAND DRIVEN	MLE/MLF	1
F.7	7	XDOZZ	NA	81343	4-4-140139CA	NONE	1/4 X 1/4 ADAPTOR MALE TO FEMALE	MLE/MLF	2
F.7	8	PAOZZ	NA	81348	4-4 140230CA	4730-00-090-9205	ELBOW, PIPE	MLE/MLF	1
F.7	9	PAOZZ	NA	01365	82A5052A2042-3	4720-01-345-1929	HOSE ASSEMBLY NON-METALLIC	MLE/MLF	1
F.7	10	PAOZZ	NA	81343	2-4 140139C	4730-00-226-8874	REDUCER, PIPE	MLE/MLF	1
F.7	11	XBOZZ	NA	01365	NPN	NONE	B-NUT	MLE/MLF	1
F.7	12	PAOZZ	NA	96906	MS15821-3SS	4730-01-342-3428	TEE, PIPE TO TUBE	MLE/MLF	1
F.7	13	XBOZZ	NA	01365	NPN	NONE	B-NUT	MLE/MLF	1
F.7	14	XBOZZ	NA	81346	TYPE 304	NONE	TUBING, CRES .25 OD .049 WALL	MLE/MLF	2
F.7	15	PAOZZ	NA	96906	MS51819-5SS	4730-00-720-2007	ADAPTOR, STRAIGHT, PIPE TO TUBE	MLE/MLF	1
F.7	16	PAOFF	NA	01365	82A5052A0504	4820-01-220-8019	VALVE LINEAR DIRECTIONAL CONTROL	MLE/MLF	1
F.7	17	PAOZZ	NA	30780	4-4-G BUSS	4730-00-720-3913	ADAPTOR, STRAIGHT, PIPE TO TUBE .25 IN.	MLE/MLF	1
F.7	18	PAOZZ	NA	01365	82A5052A0513	4820-01-220-0838	CHECK VALVE	MLE/MLF	1
F.7	19	XBOZZ	NA	01365	NPN	NONE	B-NUT	MLE/MLF	1
F.7	20	PAOZZ	NA	01276	FL3336EGG0262	4720-01-222-8712	HOSE ASSEMBLY NON-METALLIC	MLE/MLF	1
F.7	21	PAOFF	NA	01365	82A5052A0569	3040-01-341-8630	CYLINDER ASSEMBLY ACTUATING LINEAR	MLE/MLF	1
F.7	22	PAOZZ	NA	01365	82A5052A0507	4730-01-219-4277	ELBOW, PIPE: CRES OA .250 IN 1 MALE 1 FEMALE	MLE/MLF	1
F.7	23	PAOZZ	NA	01365	82A5052A0500-52	5310-01-240-7847	SWIVEL NUT ADAPTOR	MLE/MLF	1
F.7	24	PAOZZ	NA	01365	82A5052A0505	6685-01-221-8778	DAMPER, FLUID PRESSURE	MLE/MLF	1
F.7	25	PAOZZ	NA	81343	4-4-4140425S	4730-01-117-2791	TEE, PIPE	MLE/MLF	1

THIS PAGE INTENTIONALLY LEFT BLANK

Table F.7. Hydraulic Assembly, Mod 3; DWG 82A5052D0564 (Sheet 1 of 2) (Cont)

FIG NO.	KEY NO.	ARMY SMR	MC SMR	CAGE	DWG OR P/N	NAT. STOCK NO.	DESCRIPTION	UOC	QTY
F.7	26	PAOZZ	NA	01365	82A5052A2041-6	4730-00-289-5484	ADAPTOR, STRAIGHT PIPE TO TUBE: 37° MALE PIPE	MLE/MLF	1
F.7	27	PAOZZ	NA	01365	82A5052A2033	472001-342-0597	HOSE ASSEMBLY NON-METALLIC	MLE/MLF	1
F.7	28	PAOZZ	NA	01276	2024-6-4S	4730-01-167-4388	ELBOW, PIPE TO TUBE	MLE/MLF	
F.7	29	PAOZZ	NA	01365	82A5052A2031	4810-01-351-5845	VALVE, SOLENOID	MLE/MLF	1
F.7	30	PAOZZ	NA	01276	2045-4-6S	4730-01-242-1284	REDUCER, PIPE	MLE/MLF	1
F.7	31	PAOZZ	NA	01365	82A5052A204	2-2 4720-01-46-3945	HOSE ASSEMBLY NON-METALLIC	MLE/MLF	1
F.7	32	PAOZZ	NA	81343	4-4-4 140424C	4730-00-177-6166	TEE, PIPE	MLE/MLF	1
F.7	33	PAOZZ	NA	01276	2024-4-4S	4730-01-051-9840	ELBOW, PIPE TO TUBE	MLE/MLF	2
F.7	34	PAOZZ	NA	01365	82A5052A2032	4720-01-342-6765	HOSE ASSEMBLY NON-METALLIC	MLE/MLF	1
F.7	35	PAOZZ	NA	81343	J514	4730-00-214-8108	TEE, PIPE	MLE/MLF	1

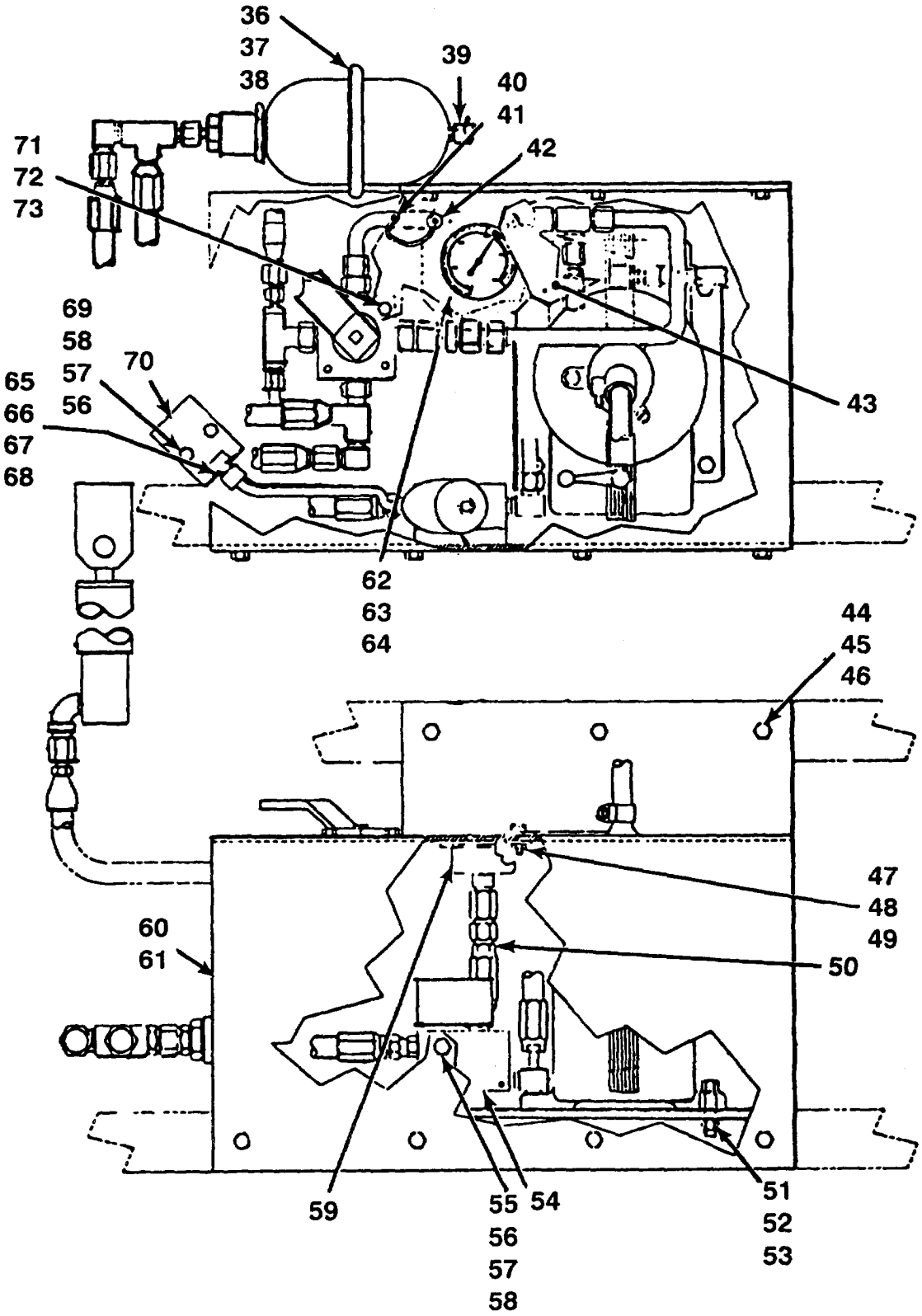

Figure F.7. Hydraulics Assembly MOD 2/3 (Sheet 2 of 2)

Table F.7. Hydraulic Assembly, Mod 3; DWG 82A5052D0564 (Sheet 2 of 2)

FIG NO.	KEY NO.	ARMY SMR	MC SMR	CAGE	DWG OR P/N	NAT. STOCK NO.	DESCRIPTION	UOC	QTY
F.7	36	PAOZZ	NA	39428	3043T47	5306-01-288-5715	BOLT, U	MLE/MLF	1
F.7	37	PAOZZ	NA	96906	MS51971-5	5310-00-768-0321	NUT, PLAIN, HEXAGON .500-13 UNC	MLE/MLF	2
F.7	38	PAOZZ	NA	96906	MS35338-143	5310-00-933-8778	WASHER, LOCK; .500	MLE/MLF	2
F.7	39	PAOZZ	NA	96906	MS51021-112	5305-01-007-1517	SETSCREW: 0.138-32 UNC X .19 LG	MLE/MLF	1
F.7	40	PAOZZ	NA	96906	MS51849-14	5305-01-053-0958	SCREW, MACHINE 0.112-40 UNC X .50 LG	MLE/MLF	1
F.7	41	PAOZZ	NA	96906	MS35335-57	5310-00-058-3599	WASHER, LOCK	MLE/MLF	1
F.7	42	PAOZZ	NA	01365	82A5052A0516	5315-01-348-4999	PIN, QUICK RELEASE	MLE/MLF	1
F.7	43	PAOZZ	NA	01365	82A5052A0518	5340-01-342-2780	COVER, ACCESS	MLE/MLF	1
F.7	44	PAOZZ	NA	96906	MS16208-37	5306-01-008-4188	BOLT, MACHINE: 0.312-18 UNC X 2.75 LG	MLE/MLF	7
F.7	45	PAOZZ	NA	96906	MS51415-6	5310-01-216-5697	WASHER, LOCK .312	MLE/MLF	7
F.7	46	PAOZZ	NA	96906	MS35649-2314	5310-00-245-3615	NUT, PLAIN, HEXAGON .312 - 18 UNC	MLE/MLF	7
F.7	47	PAOZZ	NA	96906	MS51415-3	5310-00-043-1680	WASHER, LOCK	MLE/MLF	1
F.7	48	PAOZZ	NA	96906	MS51975-1	5305-00-939-0661	SCREW, SHOULDER 0.190 IN.-24 UNC-3A	MLE/MLF	1
F.7	49	PAOZZ	NA	96906	MS35649-204	5310-00-934-9760	NUT, PLAIN, HEXAGON 190-24 UNC	MLE/MLF	1
F.7	50	PAOZZ	NA	81343	4-4 140130CA	4730-00-289-5191	COUPLING, PIPE	MLE/MLF	1
F.7	51	PAOZZ	NA	96906	MS51415-7	5310-01-218-7137	WASHER, LOCK .375	MLE/MLF	4
F.7	52	PAOZZ	NA	96906	MS51971-3	5310-00-913-8881	NUT, PLAIN, HEXAGON: 0.375 IN.-16 UNC-2B, RH, PSVT OA, 0.551 IN. MIN AND 0.5625 IN. MAX WAF	MLE/MLF	4
F.7	53	PAOZZ	NA	96906	MS16208-53	5306-00-543-5570	BOLT, MACHINE 0.375-16 UNCX 1.50 LG	MLE/MLF	4
F.7	54	PAOZZ	NA	01365	82A5052A2027	5340-01-422-4401	BLOCK, VALVE MOUNTING	MLE/MLF	1
F.7	55	PAOZZ	NA	96906	MS35307-317	5305-00-802-0016	SCREW, CAP, HEXAGON HEAD: .2 5 X 2.75	MLE/MLF	2
F.7	56	PAOZZ	NA	96906	MS35338-139	5310-00-933-8121	WASHER, LOCK: .250 NOM	MLE/MLF	2

THIS PAGE INTENTIONALLY LEFT BLANK

Table F.7. Hydraulic Assembly, Mod 3; DWG 82A5052D0564 Sheet 2 of 2) (Cont)

FIG NO.	KEY NO.	ARMY SMR	MC SMR	CAGE	DWG OR P/N	NAT. STOCK NO.	DESCRIPTION	UOC	QTY
F.7	57	PAOZZ	NA	96906	MS15795-810	5310-01-582-5677	WASHER, FLAT: 0.620 IN. MIN AND 0.640 IN. MAX OA DIA, 0.051 IN. MIN AND 0.080 IN. MAX THKNS	MLE/MLF	2
F.7	58	PAOZZ	NA	96906	MS35649-2254	5310-00-250-9477	NUT, PLAIN, HEXAGON: 0.250 IN.-20 UNC-2B, RH, 0.423 IN. MIN AND 0.437 IN. MAX WAF	MLE/MLF	2
F.7	59	PAOZZ	NA	01365	82A5052A0515	5330-01-226-8756	GASKET	MLE	1
F.7	60	PAOZZ	NA	01365	82A5052A0517	1440-01-424-8402	COVER WELDMENT	MLF	1
F.7	61	PAOZZ	NA	01365	82A5052C0517	1440-01-424-8405	COVER WELDMENT	MLE/MLF	1
F.7	62	PAOZZ	NA	96906	MS51959-32	5305-00-764-0064	SCREW, MACHINE 0.138-32 X .75 LG	MLE/MLF	3
F.7	63	PAOZZ	NA	96906	MS35649-264	5310-00-934-9761	NUT, PLAIN, HEXAGON 0.138-32 UNC	MLE/MLF	3
F.7	64	PAOZZ	NA	96906	MS35335-58	5310-00-209-1366	WASHER, LOCK	MLE/MLF	3
F.7	65	PAOZZ	NA	96906	MS35649-244	5310-00-934-9748	NUT, PLAIN, HEXAGON	MLE/MLF	5
F.7	66	PAOZZ	NA	96906	MS15795-803	5310-00-595-6211	WASHER, FLAT	MLE/MLF	4
F.7	67	PAOZZ	NA	96906	MS51957-15	5305-00-054-5649	SCREW, MACHINE: 0.112 IN.-40 UNC-2A	MLE/MLF	4
F.7	68	PAOZZ	NA	96906	MS35338-135	5310-00-933-8118	WASHER, LOCK	MLE/MLF	4
F.7	69	PAOZZ	NA	96906	MS35307-307	5305-00-021-3620	SCREW, CAP, HEXAGON; 0.250 IN. 20- UNC-2A	MLE/MLF	2
F.7	70	PAOZZ	NA	01365	82A5052A2026	5340-01-342-2762	BRACKET, ANGLE .250-20 UNC X 2.25	MLE/MLF	1
F.7	71	PAOZZ	NA	96906	MS16208-12	5306-00-087-1631	BOLT, MACHINE 0.250-20 UNC 2.25	MLE/MLF	4
F.7	72	PAOZZ	NA	96906	MS51971-1	5310-00-903-5966	NUT, PLAIN, HEXAGON .250-20 2B OZ	MLE/MLF	4
F.7	73	PAOZZ	NA	96906	MS51415-5	5310-01-228-0597	WASHER, LOCK	MLE/MLF	4

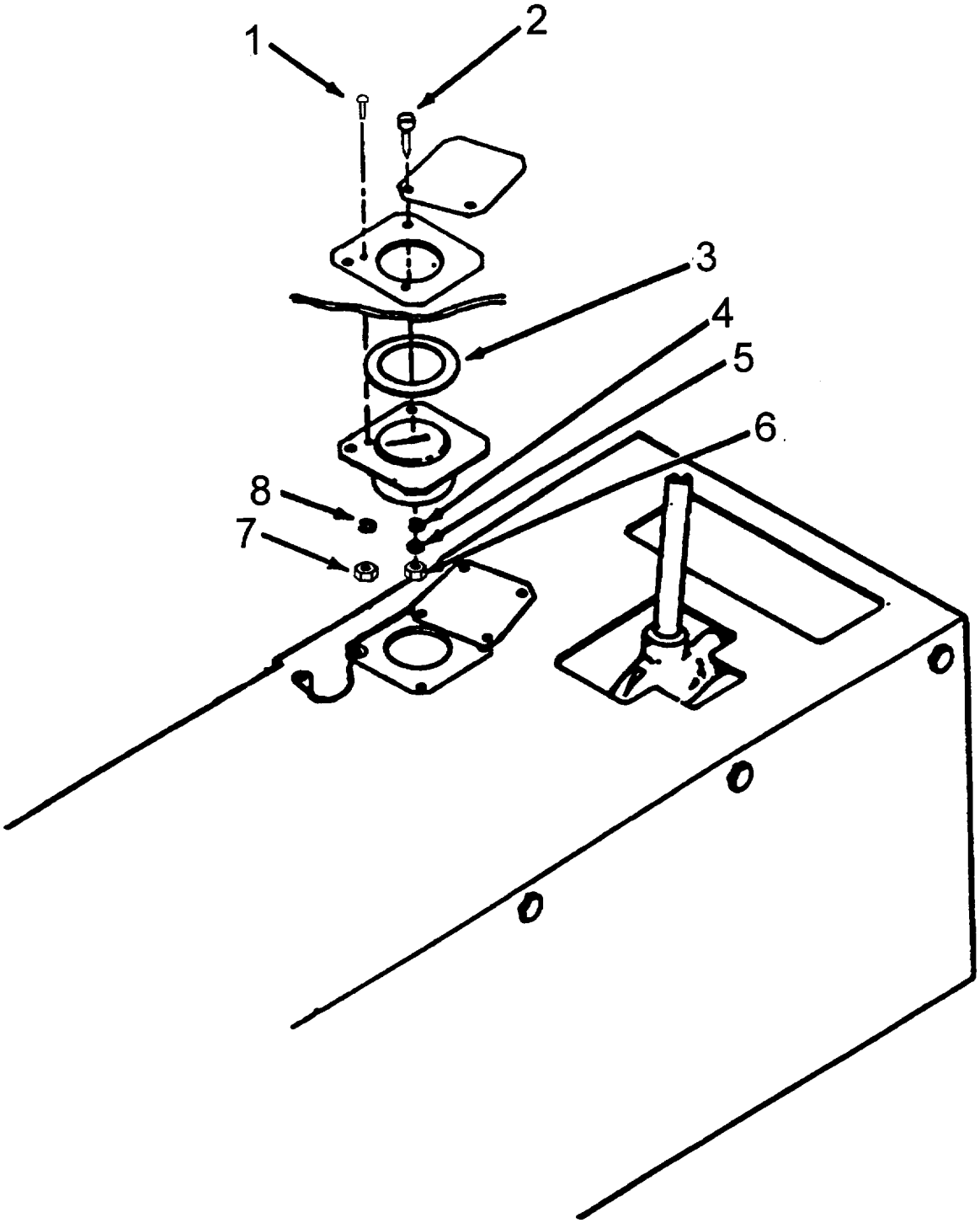

Figure F.8. Hydraulics Assembly: Pressure Gage

Table F.8. Hydraulics Assembly; Pressure Gage; DWG 82A5052A0500 and 82A5052D0564

FIG NO.	KEY NO.	ARMY SMR	MC SMR	CAGE	DWG OR P/N	NAT. STOCK NO.	DESCRIPTION	UOC	QTY
F.8	1	PAOZZ	PAOZZ	96906	MS51959-32	5305-00-764-0064	SCREW, MACHINE 0.138 IN-32 UNC-2A.		3
F.8	2	PAOZZ	PAOZZ	96906	MS51975-1	5305-00-939-0661	SCREW, SHOULDER 0.190 IN.-24UNC-3A		1
F.8	3	PAOZZ	PAOZZ	01365	82A5052A0515	5330-01-226-8756	GASKET		1
F.8	4	PAOZZ	PAOZZ	96906	MS51415-3	5310-00-043-1680	WASHER, LOCK		1
F.8	5	PAOZZ	PAOZZ	96906	MS15795-810	53100-582-5677	WASHER, FLAT 0.620 IN. MN AND 0.640 IN. MAX OA DIA, 0.051 IN. MIN AND 0.080 IN. MAX THKNS		1
F.8	6	PAOZZ	PAOZZ	96906	MS35649204	5310-00-934-9760	NUT, PLAIN, HEXAGON		1
F.8	7	PAOZZ	PAOZZ	96906	MS35649-264	5310-00-934-9761	NUT, PLAIN, HEXAGON: NO. 6-32- UNC KB		3
F.8	8	PAOZZ	PAOZZ	96906	MS35338-58	5310-00-702-6286	WASHER, LOCK		3

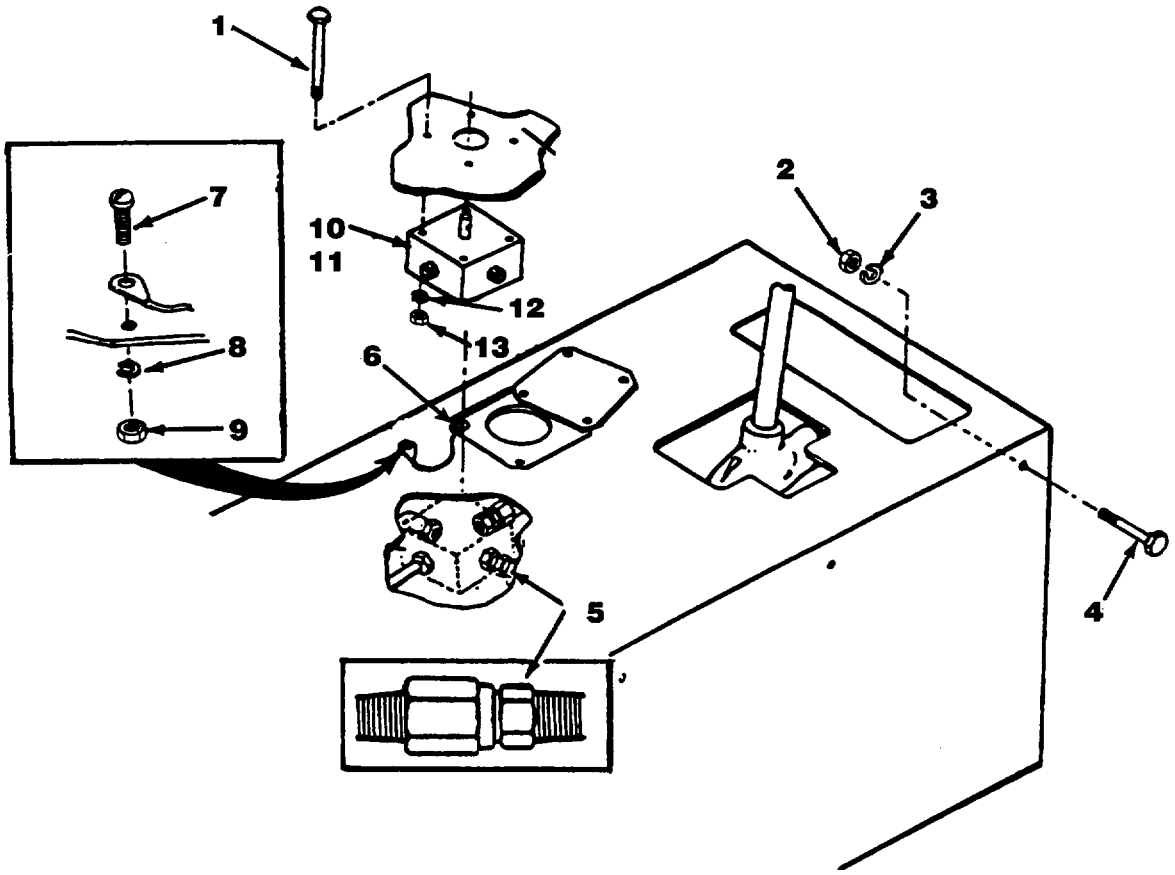

Figure F.9. Hydraulics Assembly: Directional Control Linear Valve

Table F.9. Hydraulics Assembly: Directional Control Linear Valve; DWG 82A5052A0500 and 82A5052D0564

FIG NO.	KEY NO.	ARMY SMR	MC SMR	CAGE	DWG OR P/N	NAT. STOCK NO.	DESCRIPTION	UOC	QTY
F.9	1	PAOZZ	PAOZZ	96906	MS16208-12	5306-00-087-1631	BOLT, MACHINE 0.250 IN.-20		4
							UNC-2A.		
F.9	2	PAOZZ	PAOZZ	96906	MS51971-2	5310-00-767-0445	NUT, PLAIN, HEXAGON .3125-18 OZ - 2B		7
F.9	3	PAOZZ	PAOZZ	96906	MS51415-6	5310-01-216-5697	WASHER, LOCK		7
F.9	4	PAOZZ	PAOZZ	96906	MS16208-37	5306-01-008-4188	BOLT, MACHINE: 0.312 IN.-18 UNC-2A.		7
F.9	5	PAOZZ	PAOZZ	01365	82A5052A0513	4820-01-220-0838	VALVE, CHECK		1
F.9	6	PAOZZ	PAOZZ	01365	82A5052A0516	5315-01-348-4999	PIN, BALL-LOK		1
F.9	7	PAOZZ	PAOZZ	96906	MS51849-14	5305-01-053-0958	SCREW, MACHINE 0.112		1
							IN.-40 UNC-2A		
F.9	8	PAOZZ	PAOZZ	96906	MS35335-57	5310-00-058-3599	WASHER, LOCK		1
F.9	9	PAOZZ	PAOZZ	96906	MS35649-244	5310-00-934-9748	NUT, PLAIN, HEXAGON		1
F.9	10	PAOFF	PAOFF	01365	82A5052A0504	4820-01-220-8019	VALVE, LINEAR, DIRECTIONAL CONTROL		1
F.9	11	PAFZZ	PAFZZ	59793	SEALKIT KH3/4-6-XX12	5330-01-334-9789	SEAL KIT, HYD VALVE		1
F.9	12	PAOZZ	PAOZZ	96906	MS51415-5	5310-01-228-0597	WASHER, LOCK		4
F.9	13	PAOZZ	PAOZZ	96906	MS51971-1	5310-00-903-5966	NUT, PLAIN, HEXAGON .250-20 2B OZ		4

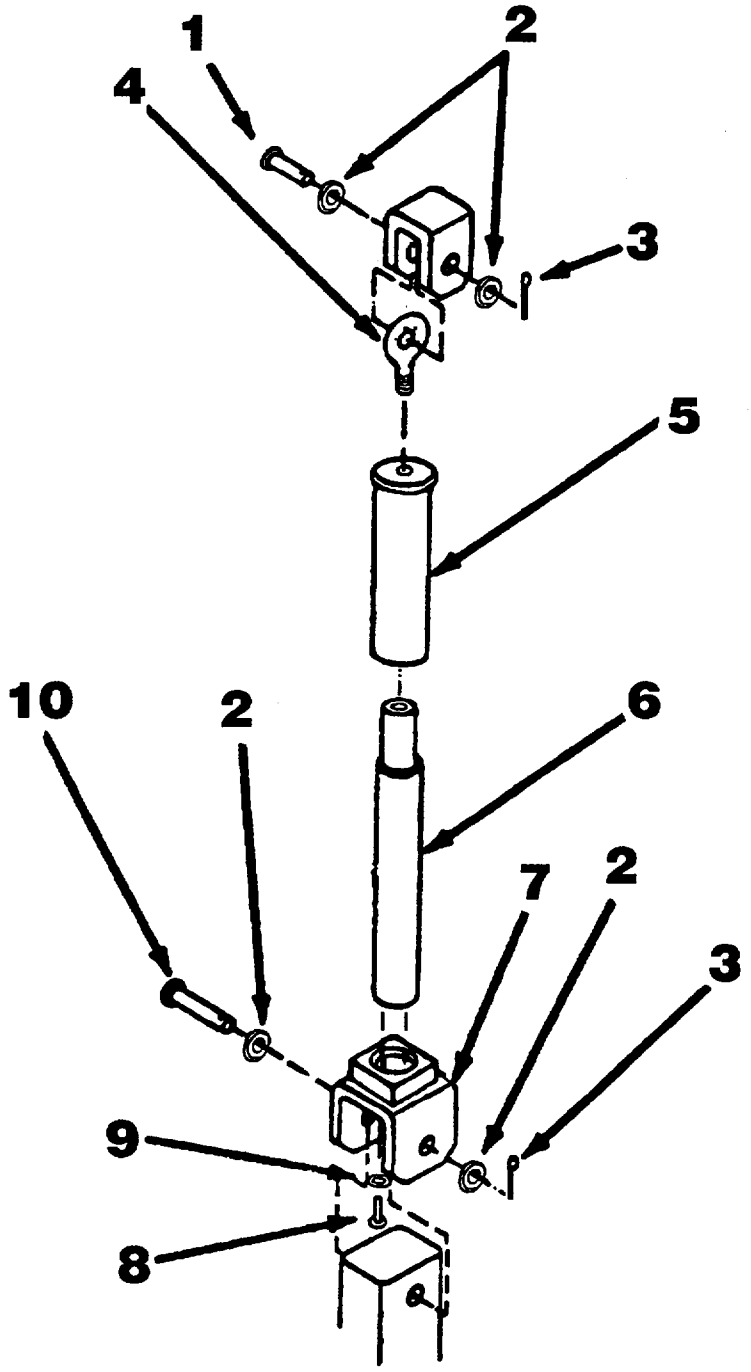

Figure F.10. Linear Actuating Cylinder Assembly

Table F.10. Linear Actuating Cylinder Assembly; DWG 82A5052A0569

FIG NO.	KEY NO.	ARMY SMR	MC SMR	CAGE	DWG OR P/N	NAT. STOCK NO.	DESCRIPTION	UOC	QTY
F.10	1	PAOZZ	PAOZZ	96906	MS20392-9C51	5315-00-269-4038	PIN, STRAIGHT HEADED		1
F.10	2	PAOZZ	PAOZZ	88044	AN960-1016	5310-00-167-0825	WASHER, FLAT		4
F.10	3	PAOZZ	PAOZZ	96906	MS24665-37	5315-00-059-0491	PIN, COTTER		2
F.10	4	PAOZZ	PAOZZ	01365	82A5052A0510	5340-01-420-2921	ROD END		1
F.10	5	PAOZZ	PAOZZ	01365	82A5052A0512	1055-01-421-5299	CYLINDER GUARD WELDMENT		1
F.10	6	PAOFF	PAOFF	01365	82A5052A0503	3040-01-237-7045	CYLINDER ACTUATING LINEAR		1
F.10	7	PAOZZ	PAOZZ	01365	82A5052A0350	5340-01-420-7647	CLEVIS		1
F.10	8	PAOZZ	PAOZZ	96906	MS1699-51	5305-00-988-7615	SCREW, CAP, SOCKET HEAD: 0.250 IN 20 UNC-3A		2
F.10	9	PAOZZ	PAOZZ	96906	MS35338-139	5310-00-933-8121	WASHER, LOCK: .250 NOM		2
F.10	10	PAOZZ	PAOZZ	96906	MS20392-9C89	5315-00-904-2807	PIN, STRAIGHT HEAD		1

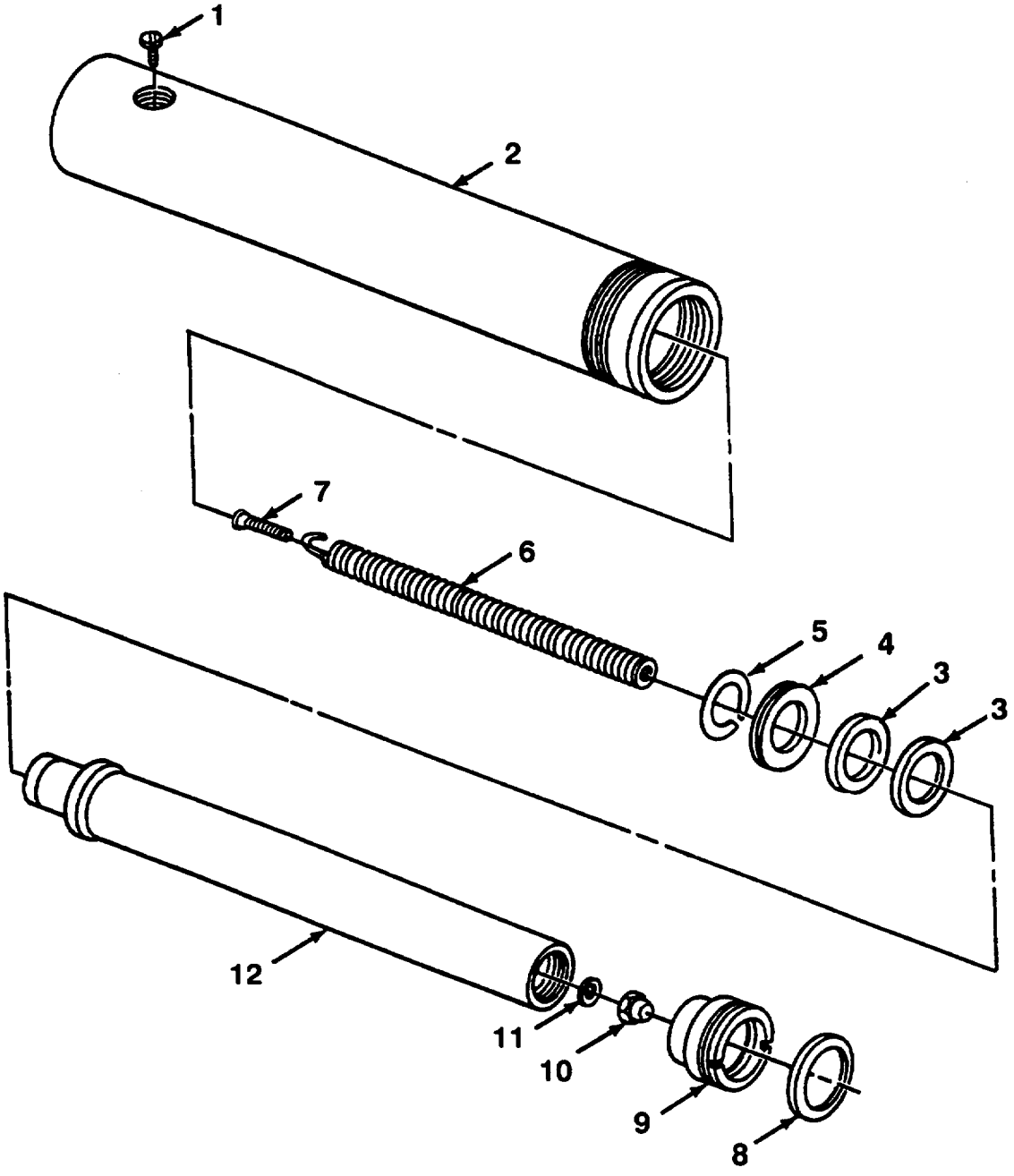

Figure F.11. Linear Actuating Cylinder

Table F.11. Linear Actuating Cylinder; DWG 82A5052A0503

FIG NO.	KEY NO.	ARMY SMR	MC SMR	CAGE	DWG OR P/N	NAT. STOCK NO.	DESCRIPTION	UOC	QTY
F.11	1	XAFZZ	XAFZZ	26952	F755183	NONE	SCREW		1
F.11	2	XAFZZ	XAFZZ	26952	CF478-030	NONE	BASE		1
F.11	3	XAFZZ	XAFZZ	26952	G453-107	NONE	BEARING, ROD		2
F.11	4	KFFZZ	KFFZZ	26952	CB765-041	NONE	CUP		1
F.11	5	KFFZZ	KFFZZ	26952	E755-136	NONE	RING, RETAINING		1
F.11	6	XAFZZ	XAFZZ	26952	CF543-110	NONE	SPRING		1
F.11	7	XAFZZ	XAFZZ	26952	F745-028	NONE	SCREW		1
F.11	8	KFFZZ	KFFZZ	26952	F540-044	NONE	RING WIPER		1
F.11	9	XAFZZ	XAFZZ	26952	F745-004	NONE	STOP, RING, BEARING SCREW		1
F.11	10	XAFZZ	XAFZZ	26952	F747-055	NONE	NUT		1
F.11	11	KFFZZ	KFFZZ	26952	W222-37	NONE	WASHER, FLAT		1
F.11	12	XAFZZ	XAFZZ	26952	CF445-040	NONE	PLUNGER		1
F.11	13	PAFZZ	PAFZZ	26952	RC53K	4320-00-135-0800	PARTS KIT, HYDRAULIC		1

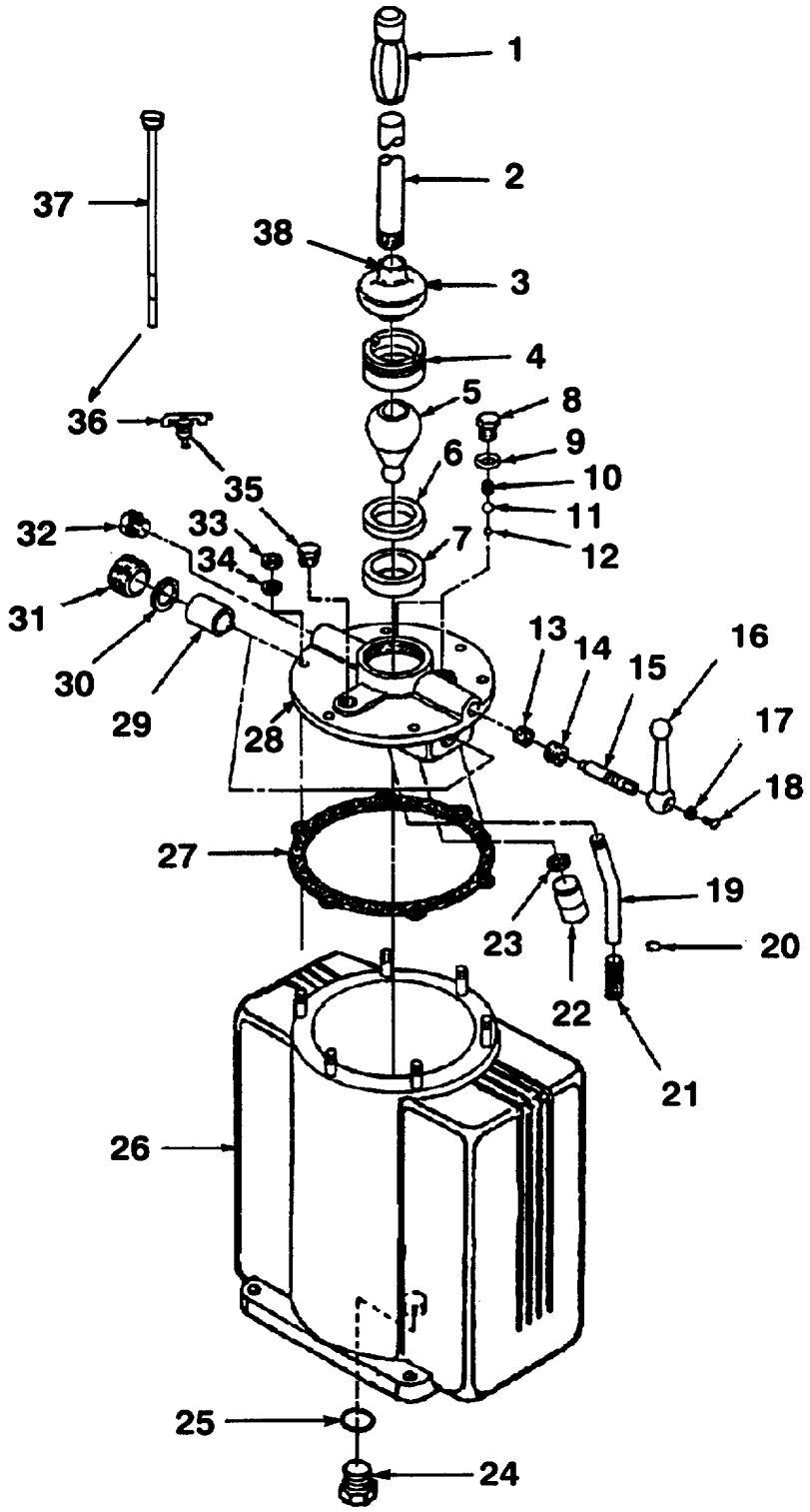

Figure F.12. Pumping Unit, Hydraulic Hand Pump

Table F.12. Pumping Unit, Hydraulic Hand Pump; 82A5052A0502 (Sheet 1 of 2)

FIG NO.	KEY NO.	ARMY SMR	MC SMR	CAGE	DWG OR P/N	NAT. STOCK NO.	DESCRIPTION	UOC	QTY
F.12	1	PAOZZ	PAOZZ	01365	82A502A0522	5390-01-301-1871	GRIP		1
F.12	2	PAOZZ	PAOZZ	07505	A1016-070	4320-00-997-0810	HANDLE, PUMP		1
F.12	3	PAOZZ	PAOZZ	26952	A1005098	5340-01-240-7911	CAP, PLUG PROTECTIVE		1
F.12	4	PAFZZ	PAFZZ	26952	DA1572020	4930-00-391-1694	CAP, ROCKER ARM		1
F.12	5	PAFZZ	PAFZZ	26952	P60-234-1	4320-00-473-6542	ROCKER ARM		1
F.12	6	KFFZZ	KFFZZ	26952	H113-236	NONE	PACKING		1
F.12	7	PAFZZ	PAFZZ	07505	P60-306	2530-00-473-6790	SEAT		1
F.12	8	PAFZZ	PAFZZ	07505	W12-185	5365-00-496-6978	PLUG		2
F.12	9	KFFZZ	KFFZZ	07505	S15-167	NONE	WASHER		2
F.12	10	PAFZZ	PAFZZ	26952	A1014110	5306-01-090-6932	SPRING		2
F.12	11	KFFZZ	KFFZZ	26952	B1011016	NONE	BALL 9/32 DIA.		2
F.12	12	KFFZZ	KFFZZ	26952	B1008016	NONE	BALL 3/8 DIA.		2
F.12	13	KFFZZ	KFFZZ	26952	A1028-074	NONE	PACKING, RELEASE VALVE		4
F.12	14	PAFZZ	PAFZZ	26952	P60-11	5340-00-371-6507	INSERT, SCREW THREAD		1
F.12	15	PAFZZ	PAFZZ	07505	P60-10	3830-00-496-6957	SPINDLE, RELEASE VALVE		1
F.12	16	PAFZZ	PAFZZ	26952	P60-12	3040-00-996-7209	LEVER, MANUAL CONTROL		1
F.12	17	PAFZZ	PAFZZ	26952	P45139	5310-00-588-9311	WASHER, LOCK		1
F.12	18	PAFZZ	PAFZZ	26952	P45138	5305-01-091-2508	SCREW		1
F.12	19	XBFZZ	XBFZZ	26952	P60268	NONE	TUBE, OIL		1
F.12	20	PAFZZ	PAFZZ	26952	A8061049	5365-01-093-7823	RING, RETAINING		1
F.12	21	PAFZZ	PAFZZ	26952	A8018018	4730-01-090-4831	SCREEN, STAINER		1
F.12	22	PAFZZ	PAFZZ	26952	P181190	4820-00-349-8942	VALVE, SAFETY RELIEF		1
F.12	23	KFFZZ	KFFZZ	07505	B159-167	5330-00-795-4269	GASKET, VALVE PLUG		1
F.12	24	PAOZZ	PAOZZ	26952	DA1574006	5365-01-113-5984	PLUG, MACHINE THREAD		1
F.12	25	PAOZZ	PAOZZ	26952	P200-37	5330-00-010-9639	GASKET		1
F.12	26	XAFZZ	XAFZZ	26952	DA1573005	NONE	RESERVOIR		1
F.12	27	PAFZZ	PAFZZ	07505	P60-161	5330-00-251-4732	GASKET		1
F.12	28	XAFZZ	XAFZZ	26952	P141264-1	NONE	PUMP HEAD		1
F.12	29	PAFZZ	PAFZZ	26952	P60-51-1	3895-00-469-6961	PISTON		1
F.12	30	KFFZZ	KFFZZ	26952	P60-37	NONE	SPACER, RING		2

THIS PAGE INTENTIONALLY LEFT BLANK.

Table F.12. Pumping Unit, Hydraulic Hand Pump; 82A5052A0502 (Sheet 2 of 2) (Cont)

FIG NO.	KEY NO.	ARMY SMR	MC SMR	CAGE	DWG OR P/N	NAT. STOCK NO.	DESCRIPTION	UOC	QTY
F.12	31	PAFZZ	PAFZZ	26952	P60-06	5301-01-091-6032	PLUG, MACHINE THREAD		2
F.12	32	PAFZZ	PAFZZ	26952	A8069006	4730-00-089-2515	PLUG, PIPE		2
F.12	33	PAFZZ	PAFZZ	26952	B1003-046	5305-01-186-4963	CAP, SCREW		6
F.12	34	PAFZZ	PAFZZ	26952	B1015006	5310-01-091-1058	WASHER, LOCK		6
F.12	35	PAOZZ	PAOZZ	26952	CA365-024	5365-00-496-6977	PLUG, MACHINE THREAD		1
F.12	36	PAOZZ	PAOZZ	26952	CA8610024	4820-01-090-6248	DRAIN, COCK		1
F.12	37	PAOZZ	PAOZZ	26952	1132	NONE	RULE, DIPSTICK		1
F.12	38	PAOZZ	PAOZZ	96906	MS35842-11	4730-00-908-3194	HOSE CLAMP		1
	99	PAFZZ	PAFZZ	26952	P50K	4320-01-098-1703	PARTS KIT, HYDRAULIC PUMP		1
					CONSISTING OF:	PACKING	PN H13236 F-8-6		1
						WASHER	S15167 F-8-9		2
						BALL	B1011016 F-8-11		2
						BALL	B1008016 F-8-12		2
						PACKING	A1028074 F8-13		4
						GASKET	B159167 F-8-23		1
						SPACER	P6037 F-8-30		2

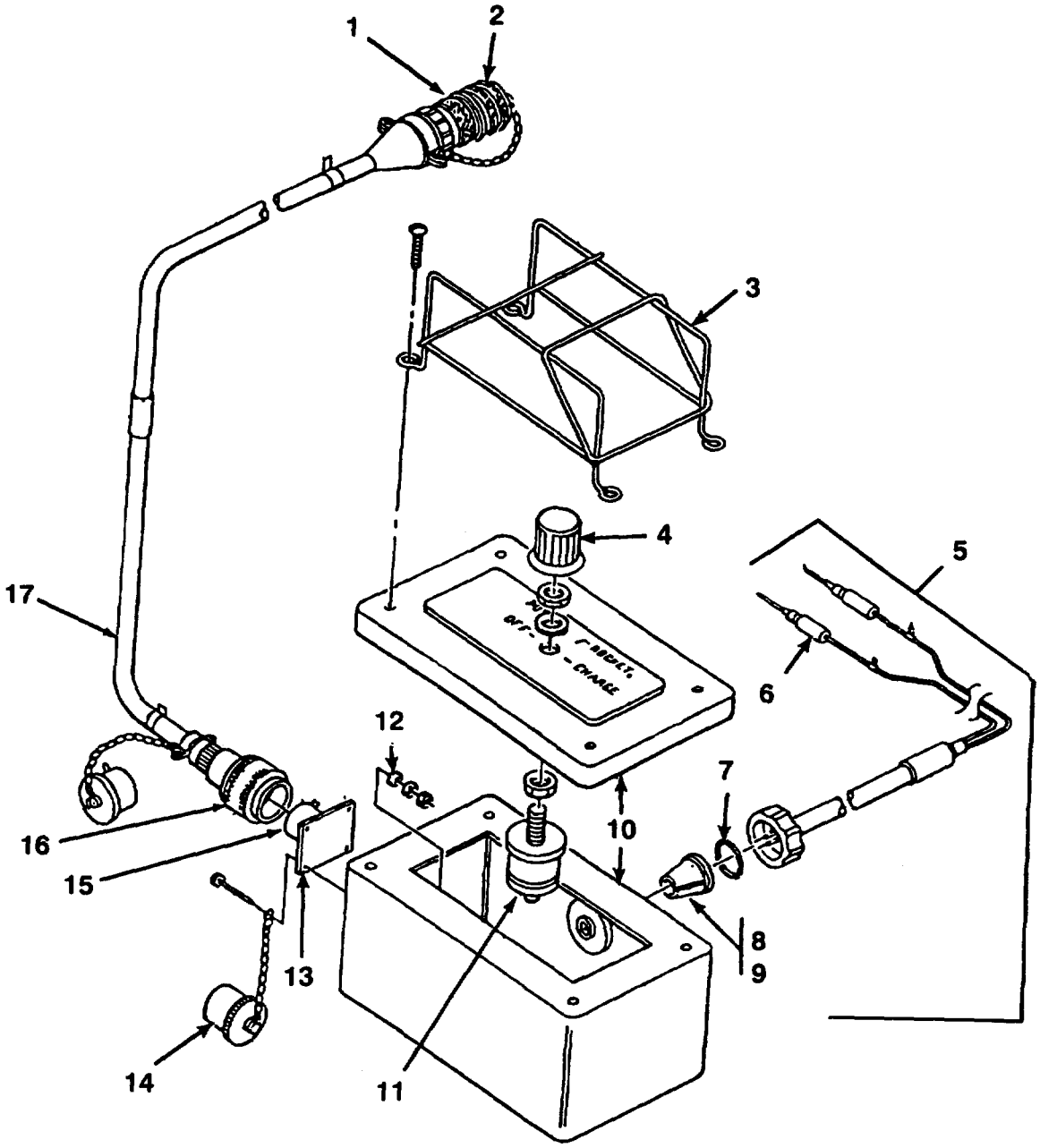

Figure F.13. Cable Assembly - Switch, Electrical (MOD 0)

Table F.13. Cable Assembly-Switch, Electrical; DWG 82A5052A0800

FIG NO.	KEY NO.	ARMY SMR	MC SMR	CAGE	DWG OR P/N	NAT. STOCK NO.	DESCRIPTION	UOC	QTY
F.13	1	NA	PAFZZ	96906	MS3106F22-10S	5935-00-451-7564	CONNECTOR, PLUG, ELECTRICAL (PORT)	MLC	1
F.13	2	NA	PAOZZ	96906	MS25042-22DA	5935-01-182-2571	COVER, ELECT CONN	MLC	1
F.13	3	NA	PAOZZ	1365	82A5052A0808	5930-01-422-1702	GUARD, SWITCH	MLC	1
F.13	4	NA	PAOZZ	96906	MS91528-2F4B	5355-00-716-6305	KNOB	MLC	1
F.13	5	NA	PAFFF	01365	82A5052A0802	5995-01-219-3403	CABLE ASSEMBLY, POWER, ELECT., NO. 2	MLC	1
F.13	6	NA	PAFZZ	81349	M28901/5-01	3935-01-193-5473	TIP PLUG, ELECTRICAL	MLC	2
F.13	7	NA	PAFZZ	88044	AN6227-19	5330-01-362-2905	PACKING, PREFORMED	MLC	1
F.13	8	NA	PAFZZ	81349	M19622-01-002	5975-00-296-4093	STUFFING TUBE	MLC	2
F.13	9	NA	PAFZZ	81349	M19622-17-01	5330-00-202-2586	PACKING ASSEMBLY	MLC	2
F.13	10	NA	XAOZZ	64696	82A5052A0809	NONE	BOX & LID	MLC	1
F.13	11	NA	PAOZZ	81349	M3786/4-5014	5930-00-432-7034	SWITCH, ROTARY	MLC	1
F.13	12	NA	PAOZZ	88044	AN960C4	5310-01-141-6672	WASHER, FLAT	MLC	4
F.13	13	NA	PAOZZ	77820	10-101949-12	5330-00-950-1970	GASKET	MLC	1
F.13	14	NA	PAOZZ	96906	MS3180-12C	5935-01-138-6461	COVER, ELECT CONNECTOR	MLC	1
F.13	15	NA	PAFZZ	96906	MS3470W12-3S	5935-01-107-8829	CONNECTOR, RECEPTACLE	MLC	1
F.13	16	NA	PAFZZ	96906	MS3476W12-3P	5935-01-108-8437	CONNECTOR, PLUG, ELECTRICAL	MLC	1
F.13	17	NA	PAOFF	01365	82A5052A0803	5995-01-218-2417	CABLE ASSEMBLY, POWER, ELECT., NO. 3	MLC	1

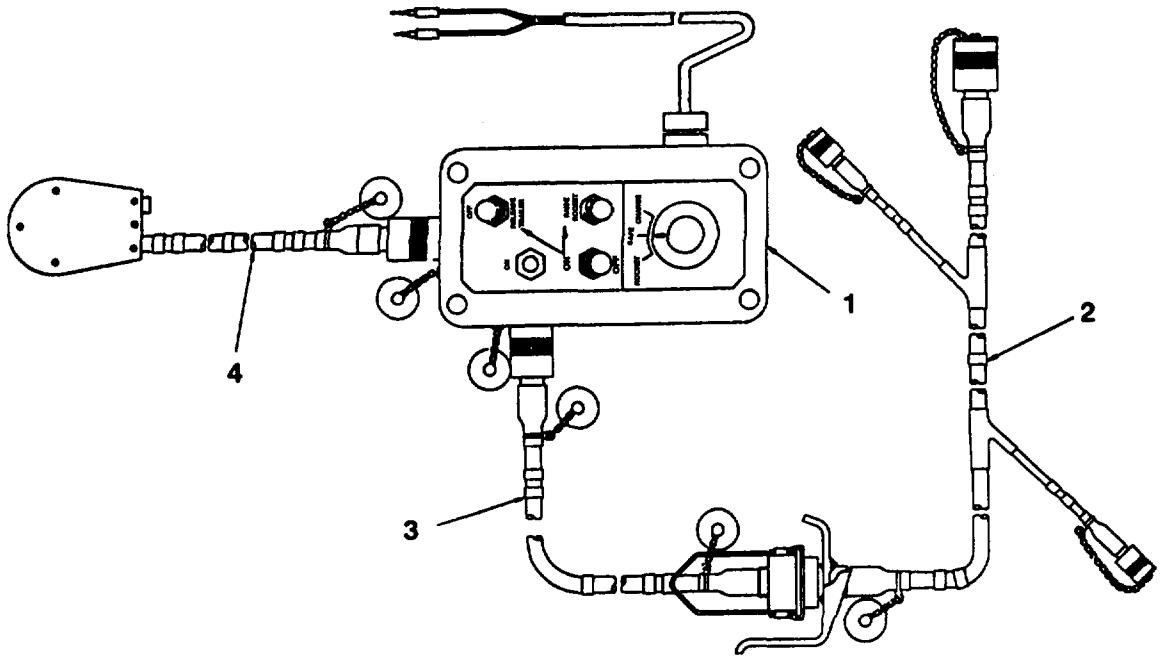

Figure F.14. Selector Switch Assembly (MOD 2/3)

Table F.14. Selector Switch Assembly; DWG 82A5052A2100

FIG NO.	KEY NO.	ARMY SMR	MC SMR	CAGE	DWG OR P/N	NAT. STOCK NO.	DESCRIPTION	UOC	QTY
F.14	1	PAOFF	NA	01365	82A5052A2112	1055-01-343-8527	CONTROL BOX, ELECTRICAL	MLE/MLF	1
							ARMAMENT SYSTEM		
F.14	2	PAOOO	NA	01365	82A5052A2103	6150-01-348-4036	CABLE ASSEMBLY POWER:	MLE/MLF	1
							W5		
F.14	3	PAOOO	NA	01365	82A5052A2102	6150-01-347-8428	CABLE ASSEMBLY POWER:	MLE/MLF	1
							W3		
F.14	4	PAOOO	NA	01365	82A5052A2104	6150-01-347-4724	CABLE ASSEMBLY POWER:	MLE/MLF	1
							W6		

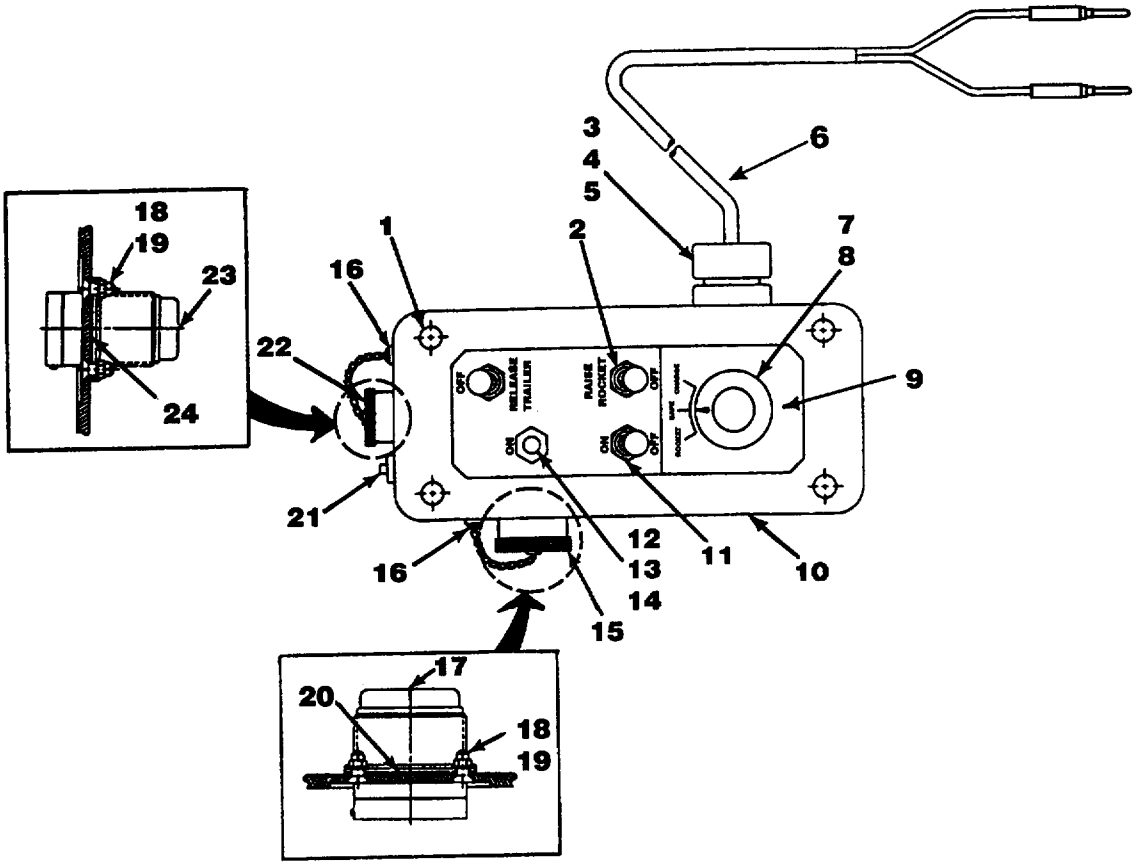

Figure F.15. Armament System Electrical Control Box Electrical (MOD 2/3)

Table F.15. Armament System, Electrical Control Box; 82A5052A2112

FIG NO.	KEY NO.	ARMY SMR	MC SMR	CAGE	DWG OR P/N	NAT. STOCK NO.	DESCRIPTION	UOC	QTY
F.15	1	PAOZZ	NA	07907	WP4PKCF	NONE	SCREW 10 X 24 X 5/8	MLE/MLF	4
F.15	2	PAFZZ	NA	96906	MS24658-26F	5930-00-811-8351	SWITCH TOGGLE	MLE/MLF	2
F.15	3	PAFZZ	NA	81349	M19622/1-002	5975-00-296-4093	STUFFING TUBE	MLE/MLF	1
F.15	4	PAFZZ	NA	81349	M19622/17-01	5330-00-202-2586	PACKING ASSEMBLY	MLE/MLF	1
F.15	5	PAFZZ	NA	96906	MS28775-214	5330-00-579-3163	PREFORMED PACKING	MLE/MLF	1
F.15	6	PAFZZ	NA	01365	82A5052A0802	5995-01-219-3403	CABLE ASSEMBLY	MLE/MLF	1
F.15	7	PAFZZ	NA	01365	82A5052A2111	5930-01-436-3144	SWITCH ROTARY	MLE/MLF	1
F.15	8	PAOZZ	NA	96906	MS91528-2F-4B	5355-00-716-6305	KNOB	MLE/MLF	1
F.15	9	PAFZZ	NA	01365	82A5052A2114	9905-01-M26-3711	FACE PLATE	MLE/MLF	1
F.15	10	XAFZZ	NA	01375	92A5052A2115	NONE	ENCLOSURE BODY	MLE/MLF	1
F.15	11	PAFZZ	NA	96906	MS24659-26F	5930-00-810-5410	SWITCH TOGGLE	MLE/MLF	1
F.15	12	PAFZZ	NA	81349	LC37YD2	6210-00-115-2591	LENS INDICATOR YELLOW	MLE/MLF	1
F.15	13	PAFZZ	NA	76854	LH89/1	6210-00-176-4928	HOUSING INDICATOR	MLE/MLF	1
F.15	14	PAOZZ	NA	81349	M63638-7	6240-00-763-7744	LAMP	MLE/MLF	1
F.15	15	PAOZZ	NA	96906	MS3181-18CA	5935-01-1 58-2494	COVER	MLE/MLF	1
F.15	16	PAOZZ	NA	96906	MS51861-15C	5305-00-147-3224	SCREW TPG THD PAN HD	MLE/MLF	2
F.15	17	PAFZZ	NA	96906	MS3470L18-11S	5935-00-424-9711	CONNECTOR RECEPTACLE	MLE/MLF	1
F.15	18	PAFZZ	NA	96906	MS24667-3	5305-00-067-9864	SCREW, CAP, SCKT, HD, FLAT	MLE/MLF	8
F.15	19	PAFZZ	NA	96906	MS2104SL04	5310-00-807-1471	NUT, SELF-LOCKING	MLE/MLF	8
F.15	20	PAFZZ	NA	96906	MS52000-6	5330-00-508-0753	GASKET	MLE/MLF	1
F.15	21	PAFZZ	NA	01365	82A5052A2116	5925-01-437-5715	CIRCUIT BREAKER	MLE/MLF	1
F.15	22	PAOZZ	NA	96906	MS3181-12CA	5935-01-195-2337	COVER	MLE/MLF	1
F.15	23	PAFZZ	NA	96906	MS3470L12-3P	5935-01-064-1115	CONNECTOR RECEPTACLE	MLE/MLF	1
F.15	24	PAFZZ	NA	96906	MS52000-3	5330-00-939-0666	GASKET	MLE/MLF	1

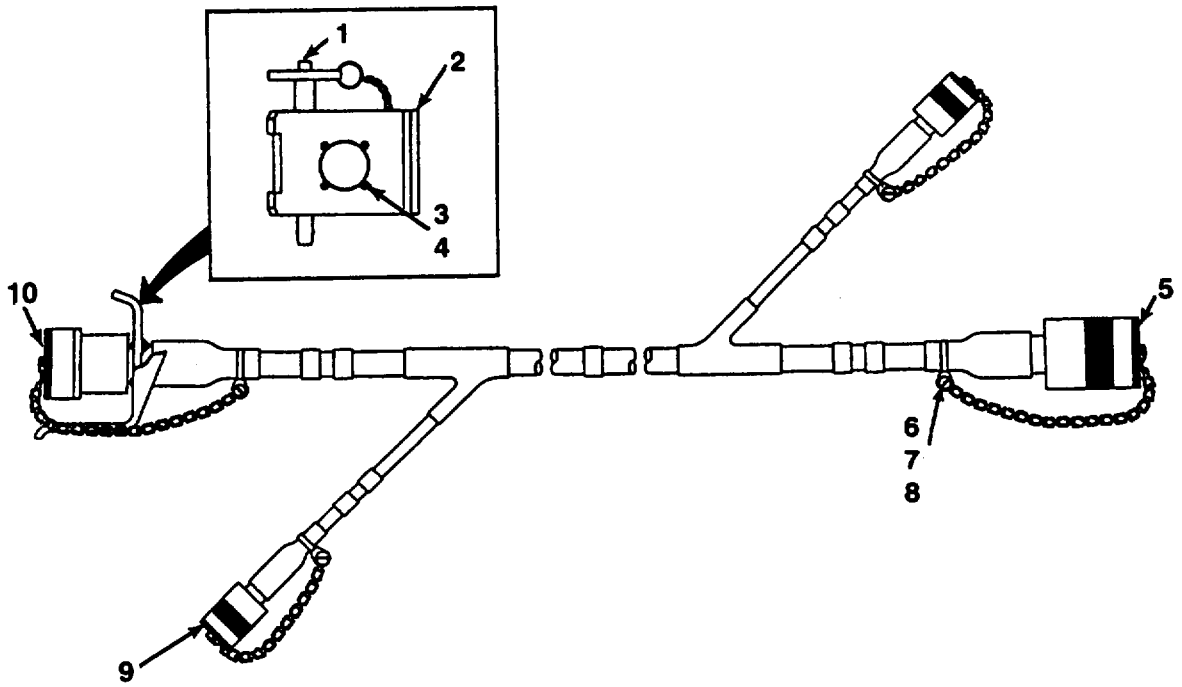

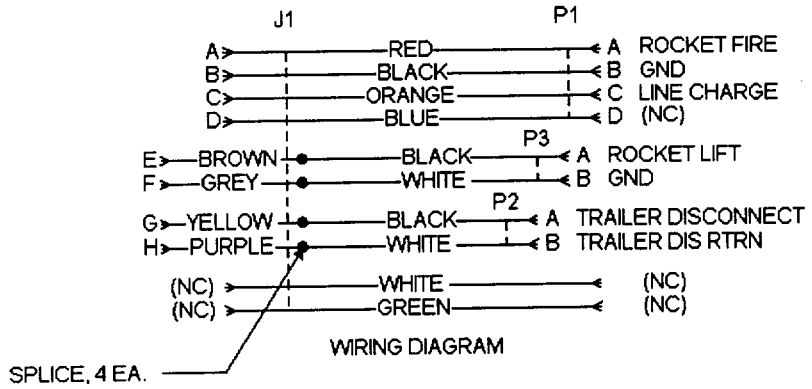

Figure F.16. W5 Power Cable Assembly

Table F.16. W5 Power Cable Assembly; 82A5052A2103

FIG NO.	KEY NO.	ARMY SMR	MC SMR	CAGE	DWG OR P/N	NAT. STOCK NO.	DESCRIPTION	UOC	QTY
F.16	1	PAOZZ	NA	96906	MS17985C530	5340-01-285-8978	PIN, QUICK RELEASE	MLE/MLF	1
F.16	2	PAOZZ	NA	01365	82A5052A2133	5340-01-344-2519	BRACKET, ANGLE	MLE/MLF	1
F.16	3	PAOZZ	NA	96906	MS51957-17	5305-00-054-5651	SCREW, MACHINE: 0.112 N. 40 UNC-2A	MLE/MLF	4
F.16	4	PAOZZ	NA	96906	MS21042L04	5310-00-807-1471	NUT, SELF-LOCKING, EXTENDED WASHER, HEXAGON	MLE/MLF	4
F.16	5	PAOZZ	NA	96906	MS25042-22DA	5935-01-182-2571	COVER, ELECT CONNECTOR	MLE/MLF	1
F.16	6	PAOZZ	NA	01365	82A5052A2108	5975-01-345-2870	STRAP, TIEDOWN, ELECTRICAL COMPONENTS	MLE/MLF	4
F.16	7	PAOZZ	NA	96906	MS35206-243	5305-00-984-6191	SCREW, MACHINE: PAN HEAD - 0.164 IN. 32 UNC-2A	MLE/MLF	4
F.16	8	PAOZZ	NA	96906	MS21042L08	5310-00-807-1473	NUT, SELF-LOCKING, EXTENDED WASHER, HEXAGON	MLE/MLF	4
F.16	9	PAOZZ	NA	96906	MS3180-12CA	5935-01-138-6461	COVER, ELECTRICAL CONNECTOR	MLE/MLF	2
F.16	10	PAOZZ	NA	81349	D38999/32W17R	5935-01-341-4240	COVER, ELECTRICAL CONNECTOR	MLE/MLF	1

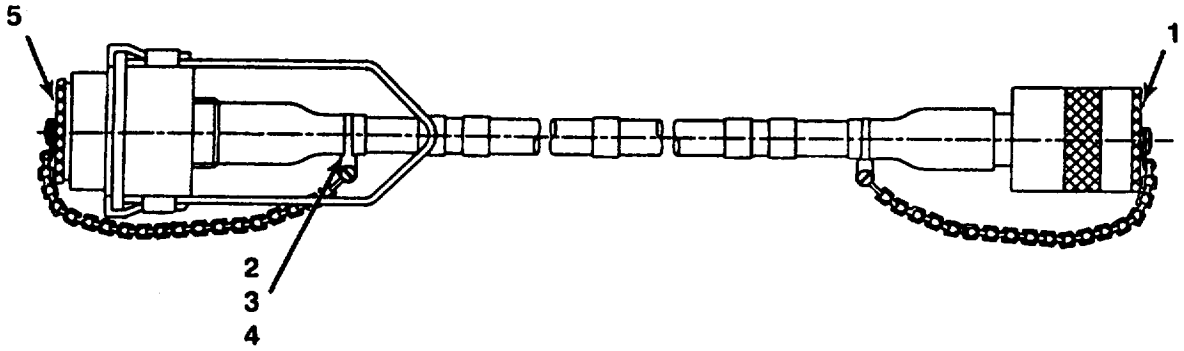

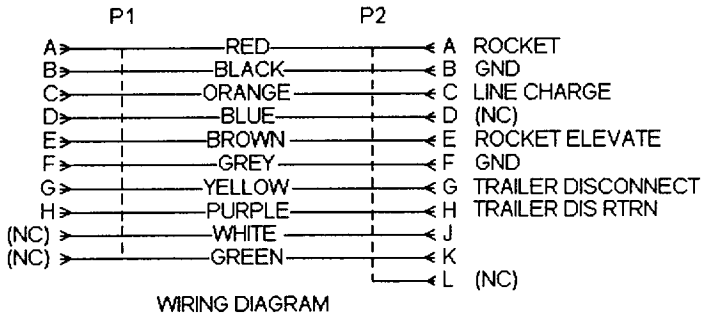

Figure F.17. W3 Power Cable Assembly

Table F.17. W3 Power Cable Assembly; 82A5052A2102

FIG NO.	KEY NO.	ARMY SMR	MC SMR	CAGE	DWG OR P/N	NAT. STOCK NO.	DESCRIPTION	UOC	QTY
F.17	1	PAOZZ	NA	96906	MS318018CAL	5935-01084-0809	COVER, ELECTRICAL CONNECTOR	MLE/MLF	1
F.17	2	PAOZZ	NA	01365	82A5052A2108	5975-01-345-2870	STRAP, TIEDOWN, ELECTRICAL COMPONENTS	MLE/MLF	2
F.17	3	PAOZZ	NA	96906	MS35206-243	5305-00-984-6191	SCREW, MACHINE: PAN HEAD - 0.164 IN. 32 UNC-2A	MLE/MLF	2
F.17	4	PAOZZ	NA	96906	MS21042L08	5310-00-807-1473	NUT, SELF-LOCKING, EXTENDED WASHER, HEXAGON	MLE/MLF	2
F.17	5	PAOZZ	NA	81349	D38999/32W17R	5935-01-341-4240	COVER, ELECTRICAL CONNECTOR	MLE/MLF	1

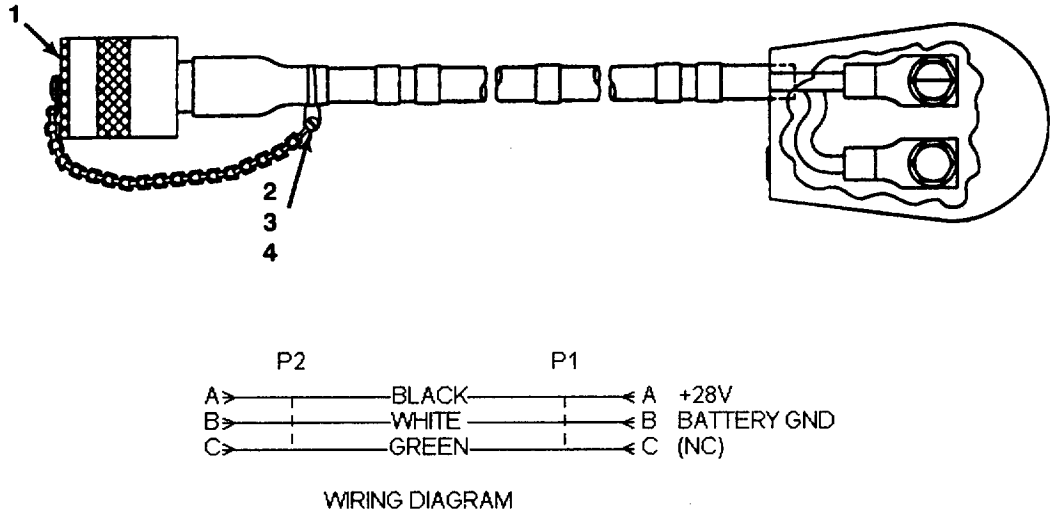

Figure F.18. W6 Power Cable Assembly

Table F.18. W6 Power Cable Assembly; 82A5052A2104

FIG NO.	KEY NO.	ARMY SMR	MC SMR	CAGE	DWG OR P/N	NAT. STOCK NO.	DESCRIPTION	UOC	QTY
F.18	1	PAOZZ	NA	96906	MS3180-12CA	5935-01-138-6461	COVER, ELECTRICAL CONNECTOR	MLE/MLF	1
F.18	2	PAOZZ	NA	96906	MS21042L08	5310-00-807-1473	NUT, SELF-LOCKING, EXTENDED WASHER, HEXAGON	MLE/MLF	1
F.18	3	PAOZZ	NA	96906	MS35206-243	530-00-984-6191	SCREW, MACHINE: PAN HEAD - 0.164 IN. 32 UNC-2A	MLE/MLF	1
F.18	4	PAOZZ	NA	1365	82A5052A2108	5975-01-345-2870	STRAP, TIEDOWN ELECTRICAL COMPONENTS	MLE/MLF	1

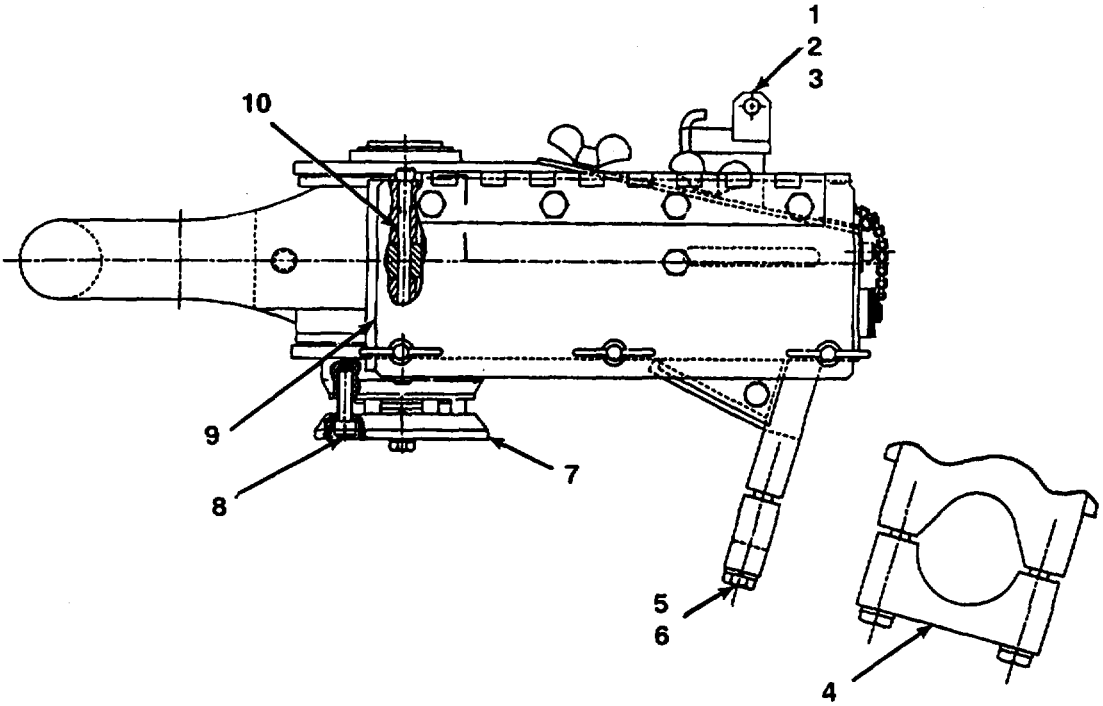

Figure F.19. Coupler, Drawbar (Sheet 1 of 2)

Table F.19. Coupler, Drawbar; 82A5052A2000 (Sheet 1 of 2)

FIG NO.	KEY NO.	ARMY SMR	MC SMR	CAGE	DWG OR P/N	NAT. STOCK NO.	DESCRIPTION	UOC	QTY
F.19	1	PAOZZ	NA	01365	82A5052A2134	5340-01-342-2819	BRACKET, MOUNTING	MLE/MLF	1
F.19	2	PAOZZ	NA	96906	MS16997-60	5305-00-983-8084	SCREW, CAP, SOCKET HEAD: 0.250 IN. 20 UNC-3A	MLE/MLF	2
F.19	3	PAOZZ	NA	96906	MS35338-139	5310-00-933-8121	WASHER, LOCK: .250 NOM	MLE/MLF	11
F.19	4	PAOZZ	NA	01365	82A5052A2012	5340-01-342-2809	CLAMP, BLOCK SECTION	MLE/MLF	1
F.19	5	PAOZZ	NA	96906	MS90728-67	5305-00-638-8920	SCREW, CAP, HEXAGON HEAD: 0.375 IN. 16 UNC-2A	MLE/MLF	2
F.19	6	PAOZZ	NA	96906	M535338-141	5310-00-984-7042	WASHER, LOCK	MLE/MLF	2
F.19	7	PAOZZ	NA	01365	82A5052A2011	5340-01-342-5793	COVER, ACCESS	MLE/MLF	1
F.19	8	PAOZZ	NA	96906	MS16997-80L	5305-01-160-0324	SCREW, SELF-LOCKING	MLE/MLF	6
F.19	9	XBOZZ	NA	01365	82A5052A2019	NONE	COVER, ACTUATOR HOUSE	MLE/MLF	1
F.19	10	PAOZZ	NA	01365	82A5052A2014	5315-01-349-9956	PIN, STRAIGHT, HEADLESS	MLE/MLF	1

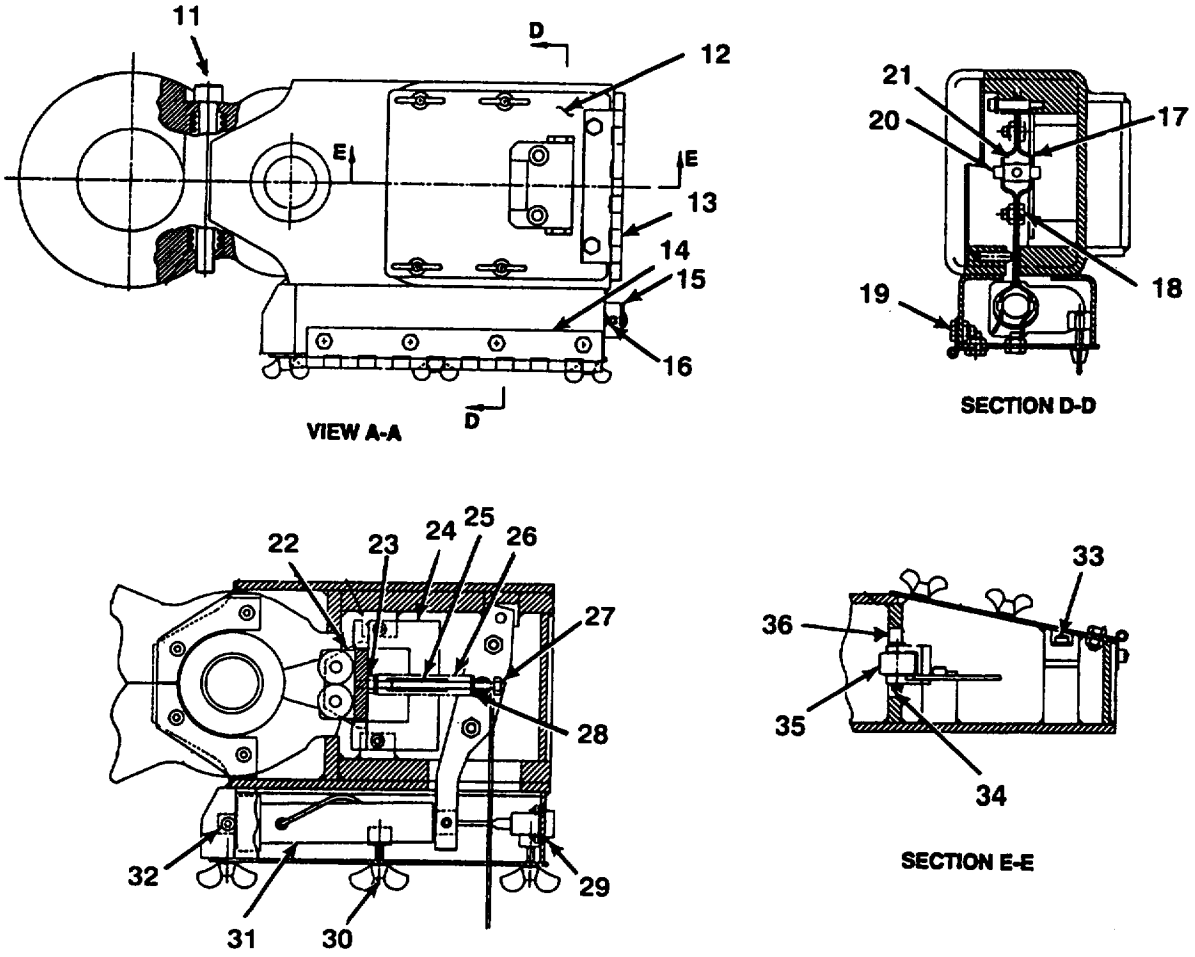

Figure F.19. Coupler Drawbar (Sheet 2 of 2)

Table F.19. Coupler, Drawbar; 82A5052A2000 (Sheet 2 of 2) (Cont)

FIG NO.	KEY NO.	ARMY SMR	MC SMR	CAGE	DWG OR P/N	NAT. STOCK NO.	DESCRIPTION	UOC	QTY
F.19	11	PAOZZ	NA	01365	82A5052A2006	5306-01-342-4922	BOLT, MACHINE	MLE/MLF	1
F.19	12	XBOZZ	NA	01365	82A5052A2005	NONE	COVER, DISCONNECT HO	MLE/MLF	1
F.19	13	XBOZZ	NA	01365	82A5052A2021	NONE	HINGE, DISCONNECT CO	MLE/MLF	1
F.19	14	XBOZZ	NA	01365	82A5052A2020	NONE	HINGE, ACTUATOR HOUS	MLE/MLF	1
F.19	15	PAOZZ	NA	96906	MS3180-12CA	5935-01-138-6461	COVER, ELECTRICAL CONNECTOR	MLE/MLF	1
F.19	16	PAOZZ	NA	96906	MS51957-14	5305-00-054-5648	SCREW, MACHINE; 0.112-40 UNC-2A	MLE/MLF	1
F.19	17	XBOZZ	NA	01365	82A5052A2059	NONE	ARM, ACTUATOR	MLE/MLF	1
F.19	18	PAOZZ	NA	88044	AN4H3A	5306-00-182-2014	BOLT, MACHINE 0.250-28-UNC-3A	MLE/MLF	13
F.19	19	PAOZZ	NA	96906	MS21042L04	5310-00-807-1471	NUT, SELF-LOCKING, EXTENDED WASHER, HEXAGON	MLE/MLF	13
F.19	20	XDOZZ	NA	01365	82A5052A2017	NONE	GUIDE, ROLLER PIN	MLE/MLF	1
F.19	21	XBOZZ	NA	01365	82A5052A2018	NONE	ARM, ACTUATOR	MLE/MLF	1
F.19	22	XDOZZ	NA	01365	82A5052A2013	NONE	MOUNT, ROLLER	MLE/MLF	1
F.19	23	PAOZZ	NA	96906	MS35691-1	5310-00-851-2674	NUT, PLAIN, HEXAGON	MLE/MLF	1
F.19	24	PAOZZ	NA	01365	82A5052A2015	534001-342-2867	BRACKET, DOUBLE ANGLE	MLE/MLF	1
F.19	25	XDOZZ	NA	01365	82A5052A2016	NONE	GUIDE, SPRING	MLE/MLF	1
F.19	26	PAOZZ	NA	01365	82A5052A2022	5360-01-346-2287	SPRING, HELICAL, COMP	MLE/MLF	1
F.19	27	PAOZZ	NA	80204	B1821BH025C 450N	5305-01-202-2676	SCREW, CAP, HEXAGON HEAD 0.250 - 20 UNC-2A	MLE/MLF	1
F.19	28	PAOZZ	NA	96906	MS15795-810	5310-00-582-5677	WASHER, FLAT: 0.620 IN. MIN AND 0.640 IN. MAX OA DIA, 0.051 IN. MIN AND 0.080 IN. MAX THKNS	MLE/MLF	2
F.19	29	PAOZZ	NA	96906	MS24693-C4	5305-00-056-9961	SCREW, MACHINE	MLE/MLF	4
F.19	30	PAOZZ	NA	01365	82A5052A2058	5305-01-342-2415	THUMBSCREW	MLE/MLF	7
F.19	31	PAOZZ	NA	01365	82A5052A2069	3010-01-352-3054	ACTUATOR ASSEMBLY	MLE/MLF	1
F.19	32	PAOZZ	NA	96906	MS16997-58L	5305-01-165-7527	SCREW, SELF-LOCKING: 0.250 IN. 20 UNC-3A	MLE/MLF	6
F.19	33	PAOZZ	NA	96906	MS51975-5	5305-00-940-9448	SCREW, SHOULDER 0.190 IN.-24 UNC-3A	MLE/MLF	1
F.19	34	PAOZZ	NA	96906	MS24665-283	5315-00-842-3044	PIN, COTTER	MLE/MLF	2
F.19	35	PAOZZ	NA	39317	CYRIS	3110-00-691-1356	BEARING, ROLLER, NEEDLE	MLE/MLF	2
F.19	36	PAOZZ	NA	96906	MS20392-4C37	5315-00-812-3685	PIN, STRAIGHT HEADED	MLE/MLF	2

Table F.20. Bulk Items List

ITEM	SMR	NSN	CAGEC	PN	NOMEN
1	PAFZZ	6145-00-814-8127	81349	M16876/1BHB0	WIRE, ELECTRICAL (BLACK)
2	PAFZZ	6145-00-643-0651	81349	M16878/1BHB9	WIRE, ELECTRICAL (WHITE)
3	PAFZZ	5940-00-204-8966	81349	MS25036-102	TERMINAL LUG
4	PAFZZ	9505-00-592-4690	96906	MS20995F32	WIRE, NON-ELECTRICAL

Section III. SPECIAL TOOLS LIST

Table F.21. Tools and Test Equipment

TOOL OR TEST EQUIP-MENT	MAINTENANCE CATEGORY	NOMENCLATURE	NATIONAL STOCK NUMBER	TOOL NUMBER
19200	PAOZZ	TEST SET, BLASTING CAP: M51	4925-00-999-3454	9227694
81348	PAOZZ	CUTTER, STEEL STRAPPING	5110-00-223-6281	GGG-C-835
81348	PAFZZ	GRINDER, ELECTRIC, PORTABLE	5130-01-087-6822	W-G-663
81348	PAOZZ	KEY, HEX, 1J2"	5120-00-198-5391	GGG-K-275
81548	PAOZZ	KEY, HEX, 5/16"	5120-00-240-5274	GGG-K-275
85936	PAOZZ	MULTIMETER	6625-01-131-8586	FLUKE-87
51719	PAOZZ	PLIERS, RETAINING RING	5120-00-089-0874	PR/12
97049	PAFZZ	SOLDERING AND DESOLDERING SET	3459-00-460-7198	W-TCP-K
19204	PAOZZ	SPRAYER, PAINT	4940-01-107-7456	12000647-6
80244	PAOZZ	STRETCHING AND SEALING MACHINE, STRAPPING, HAND	3450-00-252-5215	SAME AS NSN
91293	PAOZZ	VISE, BENCH AND PIPE	5120-00-243-0110	922-0583-060
81349	F	WELDING SET, ARC, INERT GAS SHIELDED	3431-00-691-1415	MIL-CU-52161

Section IV. CROSS-REFERENCE INDEXES

Table F.22. National Stock Number Index

STOCK NUMBER	FIG. NO.	KEY NO.	STOCK NUMBER	FIG. NO.	KEY NO.
1055-01-216-9370	F.5	22	4320-01-072-4918	F.6	3
1055-01-216-9371	F.5	3	4320-01-072-4918	F.7	6
1055-01-216-9372	F.5	2	4320-01-098-1703	F.12	99
1055-01-216-9373	F.5	1	4720-01-222-8712	F.6	16
1055-01-216-9374	F.5	7	4720-01-222-8712	F.7	20
1055-01-218-9098	F.4	26	4720-01-342-0597	F.7	27
1055-01-218-9099	F.4	1	4720-01-342-6765	F.7	34
1055-01-219-9265	F.4	12	4720-01-345-1929	F.7	9
1055-01-241-2449	F.4	17	4720-01-346-3945	F.7	31
1055-01-343-8527	F.14	1	4730-00-089-2515	F.12	32
1055-01-347-2655	F.1	24	4730-00-090-9205	F.7	8
1055-01-354-9551	F.1	9	4730-00-177-6166	F.7	32
1055-01-355-2261	F.1	4	4730-00-214-8108	F.7	35
1055-01-421-5299	F.10	5	4730-00-226-8874	F.7	10
1375-00-567-0223	F.2	7	4730-00-289-5191	F.7	50
1440-01-424-8402	F.7	60	4730-00-289-5484	F.7	26
1440-01-424-8405	F.6	2	4730-00-720-2007	F.6	24
1440-01-424-8405	F.7	61	4730-00-720-2007	F.7	15
2530-00-473-6790	F.12	7	4730-00-720-3913	F.6	13
2540-01-342-6571	F.1	6	4730-00-720-3913	F.7	17
3010-01-352-3054	F.19	31	4730-00-837-8859	F.6	11
3040-00-996-7209	F.12	16	4730-00-892-4587	F.6	15
3040-01-218-6145	F.6	10	4730-00-965-1232	F.6	23
3040-01-218-6145	F.7	3	4730-01-007-7158	F.7	4
3040-01-219-6245	F.4	22	4730-01-051-9840	F.7	33
3040-01-221-7824	F.4	25	4730-01-090-4831	F.12	21
3040-01-237-7045	F.10	6	4730-01-116-0429	F.6	22
3040-01-237-7045	F.6	19	4730-01-117-2791	F.7	25
3040-01-341-8630	F.7	21	4730-01-141-4132	F.6	14
3110-00-691-1356	F.19	35	4730-01-167-4388	F.7	28
3830-00-496-6957	F.12	15	4730-01-219-4277	F.6	18
3895-00-469-6961	F.12	29	4730-01-219-4277	F.7	22
3935-01-193-5473	F.13	6	4730-01-242-1284	F.7	30
3940-01-218-2823	F.2	3	4730-01-342-0587	F.7	1
4010-00-641-6183	F.3	3	4730-01-342-3428	F.7	12
4030-00-062-7780	F.3	2	4730-01-345-4083	F.7	2
4030-00-262-1890	F.3	5	4810-01-351-5845	F.7	29
4030-00-838-3533	F.3	4	4820-01-090-6248	F.12	36
4030-01-136-4535	F.2	4	4820-01-220-0838	F.9	5
4320-00-135-0800	F.11	13	4820-01-220-0838	F.7	18
4320-00-473-6542	F.12	5	4820-01-220-8019	F.9	10
4320-00-997-0810	F.12	2	4820-01-220-8019	F.7	16

Table F.22. National Stock Number Index (Cont)

STOCK NUMBER	FIG. NO.	KEY NO.	STOCK NUMBER	FIG. NO.	KEY NO.
4820-00-349-8942	F.12	22	5306-00-543-5570	F.6	4
4925-00-999-3454	F.2	6	5306-00-543-5570	F.7	53
4930-00-391-1694	F.12	4	5306-00-720-8260	F.5	23
5301-01-091-6032	F.12	31	5306-01-008-4188	F.7	44
5305-00-021-3620	F.7	69	5306-01-008-4188	F.9	4
5305-00-050-9235	F.5	18	5306-01-090-6932	F.12	10
5305-00-054-5648	F.19	16	5306-01-218-8741	F.4	18
5305-00-054-5649	F.7	67	5306-01-226-8720	F.2	11
5305-00-054-5651	F.16	3	5306-01-288-5715	F.6	5
5305-00-056-9961	F.19	29	5306-01-288-5715	F.7	36
5305-00-067-9864	F.15	18	5306-01-342-4922	F.19	11
5305-00-147-3224	F.15	16	5306-01-343-1748	F.1	12
5305-00-638-8920	F.19	5	5310-00-043-1680	F.7	47
5305-00-685-3511	F.4	21	5310-00-043-1680	F.8	4
5305-00-719-3997	F.4	2	5310-00-058-3599	F.7	41
5305-00-753-7171	F.5	20	5310-00-058-3599	F.9	8
5305-00-764-0064	F.7	62	5310-00-167-0801	F.5	15
5305-00-764-0064	F.8	1	5310-00-167-0822	F.5	5
5305-00-802-0016	F.7	55	5310-00-167-0825	F.10	2
5305-00-914-3819	F.3	6	5310-00-167-0825	F.1	3
5305-00-939-0661	F.7	48	5310-00-167-0825	F.5	26
5305-00-939-0661	F.8	2	5310-00-209-1366	F.7	64
5305-00-940-9448	F.19	33	5310-00-245-3615	F.5	25
5305-00-983-8084	F.19	2	5310-00-245-3615	F.7	46
5305-00-984-6191	F.16	7	5310-00-246-0128	F.2	8
5305-00-984-6191	F.17	3	5310-00-250-9477	F.3	9
5305-00-984-6191	F.18	3	5310-00-250-9477	F.7	58
5305-00-988-7607	F.4	30	5310-00-491-5895	F.2	12
5305-00-988-7615	F.10	8	5310-00-582-5677	F.8	5
5305-00-990-0675	F.4	11	5310-00-582-5677	F.19	28
5305-00-990-8348	F.4	6	5310-00-588-9311	F.12	17
5305-01-007-1517	F.6	12	5310-00-595-6211	F.7	66
5305-01-007-1517	F.7	39	5310-00-625-5756	F.3	7
5305-01-053-0958	F.7	40	5310-00-702-6286	F.8	8
5305-01-053-0958	F.9	7	5310-00-764-6609	F.2	14
5305-01-091-2508	F.12	18	5310-00-767-0445	F.9	2
5305-01-160-0324	F.19	8	5310-00-768-0321	F.6	9
5305-01-165-7527	F.19	32	5310-00-768-0321	F.7	37
5305-01-186-4963	F.12	33	5310-00-807-1471	F.15	19
5305-01-202-2676	F.19	27	5310-00-807-1471	F.16	4
5305-01-342-2415	F.19	30	5310-00-807-1471	F.19	19
5306-00-087-1631	F.7	71	5310-00-807-1473	F.16	8
5306-00-087-1631	F.9	1	5310-00-807-1473	F.17	4
5306-00-182-2014	F.19	18	5310-00-807-1473	F.18	2

Table F.22. National Stock Number Index (Cont)

STOCK NUMBER	FIG. NO.	KEY NO.	STOCK NUMBER	FIG. NO.	KEY NO.
5310-00-840-5785	F.2	5	5315-00-070-3027	F.4	31
5310-00-851-2674	F.19	23	5315-00-087-9553	F.4	16
5310-00-903-5966	F.7	72	5315-00-236-8359	F.4	28
5310-00-903-5966	F.9	13	5315-00-269-4038	F.1	8
5310-00-913-8881	F.4	19	5315-00-664-7911	F.4	32
5310-00-913-8881	F.6	7	5315-00-664-7911	F.5	4
5310-00-913-8881	F.7	52	5315-00-812-3685	F.19	36
5310-00-933-8118	F.7	68	5315-00-815-1405	F.4	23
5310-00-933-8120	F.5	16	5315-00-842-3044	F.19	34
5310-00-933-8121	F.3	8	5315-00-903-6754	F.5	8
5310-00-933-8121	F.4	3	5315-00-904-2807	F.1	1
5310-00-933-8121	F.7	56	5315-00-943-2061	F.5	10
5310-00-933-8121	F.10	9	5315-01-231-3396	F.5	6
5310-00-933-8121	F.19	3	5315-01-348-4999	F.7	42
5310-00-933-8778	F.7	38	5315-01-348-4999	F.9	6
5310-00-934-9748	F.7	65	5315-01-349-9956	F.19	10
5310-00-934-9748	F.9	9	5320-00-850-3225	F.1	13
5310-00-934-9759	F.4	9	5320-00-850-3233	F.1	18
5310-00-934-9760	F.5	17	5320-00-850-3248	F.1	17
5310-00-934-9760	F.7	49	5330-00-010-9639	F.12	25
5310-00-934-9761	F.7	63	5330-00-202-2586	F.13	9
5310-00-934-9761	F.8	7	5330-00-202-2586	F.15	4
5310-00-937-0453	F.2	13	5330-00-251-4732	F.12	27
5310-00-952-0309	F.4	4	5330-00-508-0753	F.15	20
5310-00-974-6623	F.5	24	5330-00-579-3163	F.15	5
5310-00-984-7042	F.19	6	5330-00-795-4269	F.12	23
5310-01-067-9589	F.4	8	5330-00-939-0666	F.15	24
5310-01-091-1058	F.12	34	5330-00-950-1970	F.13	13
5310-01-091-1248	F.3	10	5330-01-226-8756	F.8	3
5310-01-091-1248	F.4	10	5330-01-226-8756	F.7	59
5310-01-141-6672	F.13	12	5330-01-334-9789	F.9	11
5310-01-216-5697	F.7	45	5330-01-362-2905	F.13	7
5310-01-216-5697	F.9	3	5340-00-371-6507	F.12	14
5310-01-216-7390	F.6	8	5340-00-419-0840	F.5	19
5310-01-217-7829	F.4	33	5340-00-843-5740	F.1	19
5310-01-218-7137	F.6	6	5340-01-221-8770	F.4	29
5310-01-218-7137	F.7	51	5340-01-230-0093	F.5	9
5310-01-228-0597	F.7	73	5340-01-234-5848	F.4	20
5310-01-228-0597	F.9	12	5340-01-240-7911	F.12	3
5310-01-240-7847	F.6	17	5340-01-248-7962	F.2	9
5310-01-240-7847	F.7	23	5340-01-249-0589	F.2	10
5310-01-582-5677	F.7	57	5340-01-285-8978	F.16	1
5315-00-059-0491	F.1	2	5340-01-342-2762	F.7	70
5315-00-059-0491	F.10	3	5340-01-342-2780	F.7	43

Table F.22. National Stock Number Index (Cont)

STOCK NUMBER	FIG. NO.	KEY NO.
5340-01-342-2809	F.19	4
5340-01-342-2819	F.19	1
5340-01-342-2867	F.19	24
5340-01-342-5793	F.19	7
5340-01-344-2519	F.16	2
5340-01-420-7647	F.6	20
5340-01-422-4401	F.7	54
5340-01-433-2327	F.5	21
5355-00-716-6305	F.13	4
5355-00-716-6305	F.15	8
5360-01-220-3312	F.4	14
5360-01-239-1431	F.4	27
5360-01-346-2287	F.19	26
5365-00-496-6977	F.12	35
5365-00-496-6978	F.12	8
5365-00-810-8932	F.4	13
5365-01-093-7823	F.12	20
5365-01-113-5984	F.12	24
5380-01-225-2719	F.4	34
5390-01-301-1871	F.12	1
5930-00-432-7034	F.13	11
5930-00-810-5410	F.15	11
5930-00-811-8351	F.15	2
5930-01-218-4673	F.5	11
5930-01-422-1702	F.13	3
5930-01-436-3144	F.15	7
5935-00-424-9711	F.15	17
5935-00-451-7564	F.5	14
5935-00-451-7564	F.13	1
5935-00-837-6020	F.5	13
5935-01-064-1115	F.15	23
5935-01-084-0809	F.17	1
5935-01-107-8829	F.13	15
5935-01-108-8437	F.13	16
5935-01-138-6461	F.13	14
5935-01-138-6461	F.16	9
5935-01-138-6461	F.18	1
5935-01-138-6461	F.19	15
5935-01-158-2494	F.15	15
5935-01-182-2571	F.13	2
5935-01-182-2571	F.16	5
5935-01-195-2337	F.15	22
5935-01-341-4240	F.16	10
5935-01-341-4240	F.17	5
5975-00-296-4093	F.13	8
5975-00-296-4093	F.15	3
5975-01-345-2870	F.16	6
5975-01-345-2870	F.17	2
5975-01-345-2870	F.18	4
5995-01-218-2417	F.13	17
5995-01-219-3403	F.13	5
5995-01-219-3403	F.15	6
6150-01-221-5866	F.1	22
6150-01-347-4724	F.14	4
6150-01-347-8428	F.14	3
6150-01-348-4036	F.14	2
6210-00-115-2591	F.15	12
6210-00-176-4928	F.15	13
6240-00-763-7744	F.15	14
6605-01-234-7441	F.4	7
6685-01-221-8778	F.6	21
6685-01-221-8778	F.7	24
6685-01-236-1384	F.6	1
6685-01-236-1384	F.7	5

Table F.23. Part Number Index

CAGE	DRAWING OR PART NO.	NATIONAL STOCK NO.	FIG NO.	KEY NO.
77820	10-101949-12	5330-00-950-1970	F.13	13
26952	1132	NONE	F.12	37
81343	12-4 130140CA	4730-01-345-4083	F.7	2
81343	2-4 140139C	4730-00-226-8874	F.7	10
01276	2024-4-4S	4730-01-051-9840	F.7	33
01276	2024-6-4S	4730-01-167-4388	F.7	28
01276	2045-4-6S	4730-01-242-1284	F.7	30
00724	24-00157-823	5310-01-067-9589	F.4	8
39428	3043T47	5306-01-288-5715	F.6	5
39428	3043T47	5306-01-288-5715	F.7	36
39428	3559T51	4030-01-136-4535	F.2	4
81343	4-4 080203SA	4730-00-965-1232	F.6	23
81343	4-4 140130CA	4730-00-289-5191	F.7	50
81343	4-4 140131C	4730-01-007-7158	F.7	4
81348	4-4 140230CA	4730-00-090-9205	F.7	8
81343	4-4-4 140424C	4730-00-177-6166	F.7	32
81343	4-4-4 140425S	4730-01-117-2791	F.7	25
81343	4-4-14-139CA	NONE	F.7	7
30780	4-4-G BUSS	4730-00-720-3913	F.7	17
64696	5052A0000-65	NONE	F.3	1
01365	82A5052A0001	1055-01-219-9265	F.4	12
01365	82A5052A0002	5306-01-218-8741	F.4	18
01365	82A5052A0003	5360-01-220-3312	F.4	14
01365	82A5052A0005	5306-01-226-8720	F.2	11
50926	82A5052A0010	6605-01-234-7441	F.4	7
01365	82A5052A0011	NONE	F.4	5
01365	82A5052A0012	5310-01-217-7829	F.4	33
01365	82A5052A0013	3040-01-221-7824	F.4	25
01365	82A5052A0014	5380-01-225-2719	F.4	34
01365	82A5052A0015	NONE	F.4	24
01365	82A5052A0017	5340-01-221-8770	F.4	29
01365	82A5052A0019	1055-01-218-9098	F.4	26
01365	82A5052A0025	NONE	F.2	15
01365	82A5052D0035	NONE	F.1	23

Table F.23. Part Number Index (Cont)

CAGE	DRAWING OR PART NO.	NATIONAL STOCK NO.	FIG NO.	KEY NO.
01365	82A5052A0100	NONE	F.1	15
01356	82A5052B0100	NONE	F.1	16
01365	82A5052A0120	NONE	F.1	20
01365	82A5052B0120	NONE	F.1	21
01365	82A5052A0200	1055-01-218-9099	F.4	1
01365	82A5052B0225	1055-01-347-2655	F.1	24
01365	82A5052B0304	1055-01-354-9551	F.1	9
01365	82A5052B0305	1055-01-355-2261	F.1	4
01365	82A5052A0310	1055-01-216-9372	F.5	2
01365	82A5052A0313	1055-01-216-9374	F.5	7
01365	82A5052B0313	NONE	F.5	
01365	82A5052A0320	1055-01-216-9371	F.5	3
01365	82A5052B0320	NONE	F.5	
01365	82A5052A0324	5340-01-230-0093	F.5	9
01365	82A5052A0330	1055-01-216-9373	F.5	1
01365	82A5052B0330	NONE	F.5	
01365	82A5052A0340	NONE	F.4	15
01365	82A5052A0341	1055-01-241-2449	F.4	17
01365	82A5052A0350	5340-01-420-7647	F.10	7
01365	82A5052A0350	5340-01-420-7647	F.6	20
01365	82A5052A0360	3940-01-218-2823	F.2	3
01365	82A5052A0370	5340-01-433-2327	F.5	21
01365	82A5052A0400	1055-01-216-9370	F.5	22
01365	82A5052A0500	NONE	F.1	10
01365	82A5052A0500-52	5310-01-240-7847	F.6	17
01365	82A5052A0500-52	5310-01-240-7847	F.7	23
01365	82A5052A0501	3040-01-218-6145	F.6	10
01365	82A5052A0502	4320-01-072-4918	F.6	3
01365	82A5052A0502	4320-01-072-4918	F.7	6
01365	82A5052A0503	3040-01-237-7045	F.6	19
01365	82A5052A0503	3040-01-237-7045	F.10	6
01365	82A5052A0504	4820-01-220-8019	F.7	16
01365	82A5052A0504	4820-01-220-8019	F.9	10
01365	82A5052A0505	6685-01-221-8778	F.6	21
01365	82A5052A0505	6685-01-221-8778	F.7	24
01365	82A5052A0506	4720-01-222-8712	F.6	16
01365	82A5052A0507	4730-01-219-4277	F.6	18
01365	82A5052A0507	4730-01-219-4277	F.7	22

Table F.23. Part Number Index (Cont)

CAGE	DRAWING OR PART NO.	NATIONAL STOCK NO.	FIG NO.	KEY NO.
01365	82A5052A0508	4730-01-116-0429	F.6	22
01365	82A5052A0509	4730-00-720-3913	F.6	13
01365	82A5052A0510	5340-01-420-2921	F.10	4
01365	82A5052A0511	6685-01-236-1384	F.6	1
01365	82A5052A0511	6685-01-236-1384	F.7	5
01365	82A5052A0512	1055-01-421-5299	F.10	5
01365	82A5052A0513	4820-01-220-0838	F.7	18
01365	82A5052A0515	5330-01-226-8756	F.7	59
01365	82A5052A0515	5330-01-226-8756	F.8	3
01365	82A5052A0516	5315-01-348-4999	F.7	42
01365	82A5052A0516	5315-01-348-4999	F.9	6
01365	82A5052A0517	1440-01-424-8402	F.7	60
01365	82A5052C0517	1440-01-424-8405	F.6	2
01365	82A5052C0517	1440-01-424-8405	F.7	61
01365	82A5052A0518	5340-01-342-2780	F.7	43
01365	82A5052A0522	5390-01-301-1871	F.12	1
01365	82A5052D0564	NONE	F.1	11
01365	82A5052A0569	3040-01-341-8630	F.7	21
01365	82A5052A0600	5930-01-218-4673	F.5	11
01365	82A5052A0700	1055-01-216-9423	F.2	1
01365	82A5052A0702	NONE	F.2	2
01365	82A5052A0800	6150-01-221-5866	F.1	22
01365	82A5052A0802	5995-01-219-3403	F.13	5
01365	82A5052A0802	5995-01-219-3403	F.15	6
01365	82A5052A0803	5995-01-218-2417	F.13	17
01365	82A5052A0808	5930-01-422-1702	F.13	3
64696	82A5052A0809	NONE	F.13	10
01365	82A5052A2000	2540-01-342-6571	F.1	6
01365	82A5052A2005	NONE	F.19	12
01365	82A5052A2006	5306-01-342-4922	F.19	11
01365	82A5052A2011	5340-01-342-5793	F.19	7
01365	82A5052A2012	5340-01-342-2809	F.19	4
01365	82A5052A2013	NONE	F.19	22
01365	82A5052A2014	5315-01-349-9956	F.19	10
01365	82A5052A2015	5340-01-342-2867	F.19	24
01365	82A5052A2016	NONE	F.19	25
01365	82A5052A2017	NONE	F.19	20
01365	82A5052A2018	NONE	F.19	21

Table F.23. Part Number Index

CAGE	DRAWING OR PART NO.	NATIONAL STOCK NO.	FIG NO.	KEY NO.
01365	82A5052A2019	NONE	F.19	9
01365	82A5052A2020	NONE	F.19	14
01365	82A5052A2021	NONE	F.19	13
01365	82A5052A2022	5360-01-346-2287	F.19	26
01365	82A5052A2025-1	5306-01-343-1748	F.1	12
01365	82A5052A2026	5340-01-342-2762	F.7	70
01365	82A5052A2027	5340-01-422-4401	F.7	54
01365	82A5052A2028	NONE	F.1	7
01365	82A5052A2031	4810-01-351-5845	F.7	29
01365	82A5052A2032	4720-01-342-6765	F.7	34
01365	82A5052A2033	4720-01-342-0597	F.7	27
01365	82A5052A2041-6	4730-00-289-5484	F.7	26
01365	82A5052A2042-1	4730-01-342-0587	F.7	1
01365	82A5052A2042-2	4720-01-346-3945	F.7	31
01365	82A5052A2042-3	4720-01-345-1929	F.7	9
01365	82A5052A2058	5305-01-342-2415	F.19	30
01365	82A5052A2059	NONE	F.19	17
01365	82A5052A2069	3010-01-352-3054	F.19	31
01365	82A5052A2100	NONE	F.1	5
01365	82A5052A2102	6150-01-347-8428	F.14	3
01365	82A5052A2103	6150-01-348-4036	F.14	2
01365	82A5052A2104	6150-01-347-4724	F.14	4
01365	82A5052A2108	5975-01-345-2870	F.16	6
01365	82A5052A2108	5975-01-345-2870	F.17	2
01365	82A5052A2111	5930-01-436-3144	F.15	7
01365	82A5052A2112	1055-01-343-8527	F.14	1
01365	82A5052A2114	NONE	F.15	9
01365	82A5052A2116	5925-01-437-5715	F.15	21
01365	82A5052A2133	5340-01-344-2519	F.16	2
01365	82A5052A2134	5340-01-342-2819	F.19	1
19203	9227694	4925-00-999-3454	F.2	6
01375	92A5052A2115	NONE	F.15	10
19200	9312773	1375-00-567-0223	F.2	7
26952	A1005098	5340-01-240-7911	F.12	3
26952	A1014110	5306-01-090-6932	F.12	10
07505	A1016-070	4320-00-997-0810	F.12	2
26952	A1028-074	NONE	F.12	13
26952	A8018018	4730-01-090-4831	F.12	21

Table F.23. Part Number Index (Cont)

CAGE	DRAWING OR PART NO.	NATIONAL STOCK NO.	FIG NO.	KEY NO.
26952	A8061049	5365-01-093-7823	F.12	20
26952	A8069006	4730-00-089-2515	F.12	32
88044	AN100C4	4030-00-262-1890	F.3	5
88044	AN4H3A	5306-00-182-2014	F.19	18
88044	AN6227-19	5330-01-362-2905	F.13	7
88044	AN960-1016	5310-00-167-0825	F.1	3
88044	AN960-1016	5310-00-167-0825	F.5	26
88044	AN960-1016	5310-00-167-0825	F.10	2
88044	AN960-716	5310-00-167-0822	F.5	5
88044	AN960C10	5310-00-167-0801	F.5	15
88044	AN960C4	5310-01-141-6672	F.13	12
26952	B1003-046	5305-01-186-4963	F.12	33
26952	B1008016	NONE	F.12	12
26952	B1011016	NONE	F.12	11
26952	B1015006	5310-01-091-1058	F.12	34
07505	B159-167	5330-00-795-4269	F.12	23
80204	B1821BH025C 450N	5305-01-202-2676	F.19	27
26952	CA365-024	5365-00-496-6977	F.12	35
26952	CA8610024	4820-01-090-6248	F.12	36
26952	CB765-041	NONE	F.11	4
26952	CF445-040	NONE	F.11	12
26952	CF478-030	NONE	F.11	2
26952	CF543-110	NONE	F.11	6
99862	CL-30-HK-4A	5340-01-234-5848	F.4	20
39317	CYRIS	3110-00-691-1356	F.19	35
81349	D38999/32W17R	5935-01-341-4240	F.16	10
81349	D38999/32W17R	5935-01-341-4240	F.17	5
26952	DA1572020	4930-00-391-1694	F.12	4
26952	DA1573005	NONE	F.12	26
26952	DA1574006	5365-01-113-5984	F.12	24
26952	E755-136	NONE	F.11	5
26952	F540-044	NONE	F.11	8
26952	F745-004	NONE	F.11	9
26952	F745-028	NONE	F.11	7
26952	F747-055	NONE	F.11	10
26952	F755183	NONE	F.11	1
81349	FFT791TYPE 1 FORM 1 CLASS 5-1X6	5340-01-248-7962	F.2	9

Table F.23. Part Number Index (Cont)

CAGE	DRAWING OR PART NO.	NATIONAL STOCK NO.	FIG NO.	KEY NO.
81349	FFT791TYPE 1 FORM 1 CLASS 5-1X12	5340-01-249-0589	F.2	10
01276	FL3336EGG0262	4720-01-222-8712	F.7	20
26952	G453-107	NONE	F.11	3
26952	H113-236	NONE	F.12	6
	J514	4730-00-214-8108	F.7	35
81349	LC37YD2	6210-00-115-2591	F.15	12
84830	LE-063F-5SS	5360-01-239-1431	F.4	27
76854	LH89/1	6210-00-176-4928	F.15	13
81349	M19622-01-002	5975-00-296-4093	F.13	8
81349	M19622-17-01	5330-00-202-2586	F.13	9
81349	M24243/1-D502	5320-00-850-3248	F.1	17
81349	M24243/1-D506	5320-00-850-3225	F.1	13
81349	M24243/1-D604	5320-00-850-3233	F.1	18
81349	M28901/5-01	3935-01-193-5473	F.13	6
81349	M3786/4-5014	5930-00-432-7034	F.13	11
81349	M636318-7	6240-00-763-7744	F.15	14
96906	MS15795-803	5310-00-595-6211	F.7	66
96906	MS15795-810	5310-01-091-1248	F.3	10
96906	MS15795-810	5310-01-091-1248	F.4	10
96906	MS15795-810	5310-01-582-5677	F.7	57
96906	MS15795-810	5310-00-582-5677	F.8	5
96906	MS15795-810	5310-00-582-5677	F.19	28
96906	MS15795-812	5310-00-625-5756	F.3	7
96906	MS15821-3SS	4730-01-342-3428	F.7	12
96906	MS16208-12	5306-00-087-1631	F.7	71
96906	MS16208-12	5306-00-087-1631	F.9	1
96906	MS16208-37	5306-01-008-4188	F.7	44
96906	MS16208-37	5306-01-008-4188	F.9	4
96906	MS16208-53	5306-00-543-5570	F.6	4
96906	MS16208-53	5306-00-543-5570	F.7	53
96906	MS16212-15	5310-00-491-5895	F.2	12
96906	MS16555-645	5315-00-087-9553	F.4	16
96906	MS16624-1068	5365-00-810-8932	F.4	13
96906	MS16843-1	4030-00-838-3533	F.3	4
96906	MS16895-47	5305-00-990-0675	F.4	11
96906	MS16995-35	5305-00-988-7607	F.4	30
96906	MS16995-51	5305-00-988-7615	F.10	8

Table F.23. Part Number Index (Cont)

CAGE	DRAWING OR PART NO.	NATIONAL STOCK NO.	FIG NO.	KEY NO.
96906	MS16997-58L	5305-01-165-7527	F.19	32
96906	MS16997-60	5305-00-983-8084	F.19	2
96906	MS16997-80L	5305-01-160-0324	F.19	8
96906	MS17985C530	5340-01-285-8978	F.16	1
81349	MS19622/17-01	5330-00-202-2586	F.15	4
96906	MS20392-4C37	5315-00-812-3685	F.19	36
96906	MS20392-6C63	5315-01-231-3396	F.5	6
96906	MS20392-6C73	5315-00-903-6754	F.5	8
96906	MS20392-6C81	5315-00-943-2061	F.5	10
96906	MS20392-7C41	5315-00-070-3027	F.4	31
96906	MS20392-9C51	5315-00-269-4038	F.1	8
96906	MS20392-9C51	5315-00-269-4038	F.10	1
96906	MS20392-9C89	5315-00-904-2807	F.1	1
96906	MS20392-9C89	5315-00-904-2807	F.10	10
96906	MS21042L04	5310-00-807-1471	F.16	4
96906	MS21042L04	5310-00-807-1471	F.19	19
96906	MS21042L08	5310-00-807-1473	F.16	8
96906	MS21042L08	5310-00-807-1473	F.17	4
96906	MS21042L08	5310-00-807-1473	F.18	2
96906	MS2104SL04	5310-00-807-1471	F.15	19
96906	MS21320-3	NONE	F.5	12
96906	MS21322-35	5340-00-419-0840	F.5	19
96906	MS24630-10	5305-00-753-7171	F.5	20
96906	MS24658-26F	5930-00-811-8351	F.15	2
96906	MS24659-26F	5930-00-810-5410	F.15	11
96906	MS24665-151	5315-00-815-1405	F.4	23
96906	MS24665-283	5315-00-842-3044	F.19	34
96906	MS24665-37	5315-00-059-0491	F.1	2
96906	MS24665-37	5315-00-059-0491	F.10	3
96906	MS24665-370	5315-00-236-8359	F.4	28
96906	MS24667-3	5305-00-067-9864	F.15	18
96906	MS24671-16	5305-00-990-8348	F.4	6
96906	MS24693-C4	5305-00-056-9961	F.19	29
96906	MS25042-22DA	5935-01-182-2571	F.13	2
96906	MS25042-22DA	5935-01-182-2571	F.16	5
96906	MS27952-15	5310-00-246-0128	F.2	8
96906	MS28775-214	5330-00-579-3163	F.15	5
96906	MS3100R22-10P	5935-00-837-6020	F.5	13

Table F.23. Part Number Index (Cont)

CAGE	DRAWING OR PART NO.	NATIONAL STOCK NO.	FIG NO.	KEY NO.
96906	MS3106F22-10S	5935-00-451-7564	F.5	14
96906	MS3106F22-10S	5935-00-451-7564	F.13	1
96906	MS3180-12C	5935-01-138-6461	F.13	14
96906	MS3180-12CA	5935-01-138-6461	F.16	9
96906	MS3180-12CA	5935-01-138-6461	F.18	1
96906	MS3180-12CA	5935-01-138-6461	F.19	15
96906	MS3180-18CAL	5935-01-084-0809	F.17	1
96906	MS3181-12CA	5935-01-195-2337	F.15	22
96906	MS3181-18CA	5935-01-158-2494	F.15	15
96906	MS3470L12-3P	5935-01-064-1115	F.15	23
96906	MS3470L18-11S	5935-00-424-9711	F.15	17
96906	MS3470W12-3S	5935-01-107-8829	F.13	15
96906	MS3476W12-3P	5935-01-108-8437	F.13	16
96906	MS35206-243	5305-00-984-6191	F.16	7
96906	MS35206-243	5305-00-984-6191	F.17	3
96906	MS35206-243	5305-00-984-6191	F.18	3
96906	MS35307-303	5305-00-719-3997	F.4	2
96906	MS35307-307	5305-00-021-3620	F.7	69
96906	MS35307-317	5305-00-802-0016	F.7	55
96906	MS35307-335	5306-00-720-8260	F.5	23
96906	MS35308-306	5305-00-685-3511	F.4	21
96906	MS35335-57	5310-00-058-3599	F.7	41
96906	MS35335-57	5310-00-058-3599	F.9	8
96906	MS35335-58	5310-00-209-1366	F.7	64
96906	MS35338-135	5310-00-933-8118	F.7	68
96906	MS35338-138	5310-00-933-8120	F.5	16
96906	MS35338-139	5310-00-933-8121	F.3	8
96906	MS35338-139	5310-00-933-8121	F.4	3
96906	MS35338-139	5310-00-933-8121	F.7	56
96906	MS35338-139	5310-00-933-8121	F.10	9
96906	MS35338-139	5310-00-933-8121	F.19	3
96906	MS35338-140	5310-00-974-6623	F.5	24
96906	MS35338-141	5310-00-984-7042	F.19	6
96906	MS35338-143	5310-00-933-8778	F.7	38
96906	MS35338-145	5310-00-937-0453	F.2	13
96906	MS35338-58	5310-00-702-6286	F.8	8
96906	MS35649-204	5310-00-934-9760	F.7	49
96906	MS35649-204	5310-00-934-9760	F.8	6

Table F.23. Part Number Index (Cont)

CAGE	DRAWING OR PART NO.	NATIONAL STOCK NO.	FIG NO.	KEY NO.
96906	MS35649-204	5310-00-934-9760	F.5	17
96906	MS35649-2254	5310-00-250-9477	F.3	9
96906	MS35649-2254	5310-00-250-9477	F.7	58
96906	MS35649-2314	5310-00-245-3615	F.5	25
96906	MS35649-2314	5310-00-245-3615	F.7	46
96906	MS35649-244	5310-00-934-9748	F.7	65
96906	MS35649-244	5310-00-934-9748	F.9	9
96906	MS35649-264	5310-00-934-9761	F.7	63
96906	MS35649-264	5310-00-934-9761	F.8	7
96906	MS35649-284	5310-00-934-9759	F.4	9
96906	MS35691-1	5310-00-851-2674	F.19	23
96906	MS35691-7	5310-00-840-5785	F.2	5
96906	MS35793-1	5340-00-843-5740	F.1	19
96906	MS35842-11	4730-00-908-3194	F.12	38
96906	MS51021-112	5305-01-007-1517	F.6	12
96906	MS51021-112	5305-01-007-1517	F.7	39
96906	MS51415-3	5310-00-043-1680	F.7	47
96906	MS51415-3	5310-00-043-1680	F.8	4
96906	MS51415-5	5310-01-228-0597	F.7	73
96906	MS51415-5	5310-01-228-0597	F.9	12
96906	MS51415-6	5310-01-216-5697	F.7	45
96906	MS51415-6	5310-01-216-5697	F.9	3
96906	MS51415-7	5310-01-218-7137	F.6	6
96906	MS51415-7	5310-01-218-7137	F.7	51
96906	MS51415-9	5310-01-216-7390	F.6	8
96906	MS51811-3SSB	4730-00-837-8859	F.6	11
96906	MS51815-5SS	4730-00-892-4587	F.6	15
96906	MS51819-5SS	4730-00-720-2007	F.6	24
96906	MS51819-5SS	4730-00-720-2007	F.7	15
96906	MS51824-5SS	4730-01-141-4132	F.6	14
96906	MS51844-24	4030-00-062-7780	F.3	2
96906	MS51849-14	5305-01-053-0958	F.7	40
96906	MS51849-14	5305-01-053-0958	F.9	7
96906	MS51861-15C	5305-00-147-3224	F.15	16
96906	MS51957-14	5305-00-054-5648	F.19	16
96906	MS51957-15	5305-00-054-5649	F.7	67
96906	MS51957-17	5305-00-054-5651	F.16	3
96906	MS51957-69	5305-00-050-9235	F.5	18

Table F.23. Part Number Index (Cont)

CAGE	DRAWING OR PART NO.	NATIONAL STOCK NO.	FIG NO.	KEY NO.
96906	MS51959-32	5305-00-764-0064	F.8	1
96908	MS51959-32	5305-00-764-0064	F.7	62
96906	MS51971-1	5310-00-903-5966	F.7	72
96906	MS51971-1	5310-00-903-5966	F.9	13
96906	MS51971-2	5310-00-767-0445	F.9	2
96906	MS51971-3	5310-00-913-8881	F.4	19
96906	MS51971-3	5310-00-913-8881	F.6	7
96906	MS51971-3	5310-00-913-8881	F.7	52
96906	MS51971-5	5310-00-768-0321	F.6	9
96906	MS51971-5	5310-00-768-0321	F.7	37
96906	MS51971-7	5310-00-764-6609	F.2	14
96906	MS51975-1	5305-00-939-0661	F.7	48
96906	MS51975-1	5305-00-939-0661	F.8	2
96906	MS51975-5	5305-00-940-9448	F.19	33
96906	MS51975-10	5305-00-914-3819	F.3	6
96906	MS52000-3	5330-00-939-0666	F.15	24
96906	MS52000-6	5330-00-508-0753	F.15	20
96906	MS90495	9905-00-577-4219	F.1	14
80204	MS90728-24	5305-01-202-2676	F.19	27
96906	MS90728-67	5305-00-638-8920	F.19	5
96906	MS91528-2F-4B	5355-00-716-6305	F.13	4
96906	MS91528-2F-4B	5355-00-716-6305	F.15	8
96906	MS9245-47	5315-00-664-7911	F.4	32
96906	MS9245-47	5315-00-664-7911	F.5	4
80205	NAS620C416	5310-00-952-0309	F.4	4
26952	P-50K	4320-01-098-1703	F.12	99
26952	P141264-1	NONE	F.12	28
26952	P181190	4820-00-349-8942	F.12	22
26952	P200-37	5330-00-010-9639	F.12	25
26952	P45138	5305-01-091-2508	F.12	18
26952	P45139	5310-00-588-9311	F.12	17
26952	P60-06	5301-01-091-6032	F.12	31
07505	P60-10	3830-00-496-6957	F.12	15
26952	P60-11	5340-00-371-6507	F.12	14
26952	P60-12	3040-00-996-7209	F.12	16
07505	P60-161	5330-00-251-4732	F.12	27
26952	P60-234-1	4320-00-473-6542	F.12	5
07505	P60-306	2530-00-473-6790	F.12	7

Table F.23. Part Number Index (Cont)

CAGE	DRAWING OR PART NO.	NATIONAL STOCK NO.	FIG NO.	KEY NO.
26952	P60-37	NONE	F.12	30
26952	P60-51-1	3895-00-469-6961	F.12	29
26952	P60268	NONE	F.12	19
26952	RC53K	4320-00-135-0800	F.11	13
81348	RRW410	4010-00-641-6183	F.3	3
07505	815-167	NONE	F.12	9
59793	SEALKIT KH3/4-6-XX12	5330-01-334-9789	F.9	11
81346	TYPE 304	NONE	F.7	14
07505	W12-185	5365-00-496-6978	F.12	8
26952	W222-37	NONE	F.11	11
07907	WP4PKCF	NONE	F.15	1

Table F.24. Figure and Item Number Index

FIG NO.	KEY NO.	NATIONAL STOCK NO.	CAGE	DRAWING OR PART NO.
F.1	1	5315-00-904-2807	96906	MS20392-9C89
F.1	2	5315-00-059-0491	96906	MS24665-372
F.1	3	5310-00-167-0825	88044	AN960-1016
F.1	4	1055-01-355-2261	01365	82A5052B0305
F.1	5	NONE	01365	82A5052A2100
F.1	6	2540-01-342-6571	01365	82A5052A2000
F.1	7	NONE	01365	82A5052A2028
F.1	8	5315-00-269-4038	96906	MS20392-9C51
F.1	9	1055-01-354-9551	01365	82A5052B0304
F.1	10	NONE	01365	82A5052A0500
F.1	11	NONE	01365	82A5052D0564
F.1	12	5306-01-343-1748	01365	82A5052A2025-1
F.1	13	5320-00-850-3225	81349	M24243/1-D506
F.1	14	9905-00-577-4219	96906	MS-90495
F.1	15	NONE	01365	82A5052A0100
F.1	16	NONE	01356	82A5052B0100
F.1	17	5320-00-850-3248	81349	M24243/1-D502
F.1	18	5320-00-850-3233	81349	M24243/1-D604
F.1	19	5340-00-843-5740	96906	MS35793-1
F.1	20	NONE	01365	82A5052A0120
F.1	21	NONE	01365	82A5052B0120
F.1	22	6150-01-221-5866	01365	82A5052A0800
F.1	23	NONE	01365	82A5052D0035
F.1	24	1055-01-347-2655	01365	82A5052B0225
F.2	1	1055-01-216-9423	01365	82A5052A0700
F.2	2	NONE	01365	82A5052A0702
F.2	3	3940-01-218-2823	01365	82A5052A0360
F.2	4	4030-01-136-4535	39428	3559T51
F.2	5	5310-00-840-5785	96906	MS35691-7
F.2	6	4925-00-999-3454	19203	9227694
F.2	7	1375-00-567-0223	19200	9312773
F.2	8	5310-00-246-0128	96906	MS27952-15

Table F.24. Figure and Item Number Index (Cont)

FIG NO.	KEY NO.	NATIONAL STOCK NO.	CAGE	DRAWING OR PART NO.
F.2	9	5340-01-248-7962	81349	FFT791TYPE 1 FORM 1 CLASS5-1X6
F.2	10	5340-01-249-0589	81349	FFT791TYPE1 FORM 1 CLASS5-1X12
F.2	11	5306-01-226-8720	01365	82A5052A0005
F.2	12	5310-00-491-5895	96906	MS16212-15
F.2	13	5310-00-937-0453	96906	MS35338-145
F.2	14	5310-00-764-6609	96906	MS51971-7
F.2	15	NONE	01365	82A5052A0025
F.3	1	NONE	64696	5052A000-65
F.3	2	4030-00-062-7780	96906	MS51844-24
F.3	3	4010-00-641-6183	81348	RRW410
F.3	4	4030-00-838-3533	96906	MS16843-1
F.3	5	4030-00-262-1890	88044	AN100C4
F.3	6	5305-00-914-3819	96906	MS51975-10
F.3	7	5310-00-625-5756	96906	MS15795-812
F.3	8	5310-00-933-8121	96906	MS35338-139
F.3	9	5310-00-250-9477	96906	MS35649-2254
F.3	10	5310-01-091-1248	96906	MS15795-810
F.4	1	1055-01-218-9099	01365	82A5052A0200
F.4	2	5305-00-719-3997	96906	MS35307-303
F.4	3	5310-00-933-8121	96906	MS35338-139
F.4	4	5310-00-952-0309	80205	NAS620C416
F.4	5	NONE	01365	82A5052A0011
F.4	6	5305-00-990-8348	96906	MS24671-16
F.4	7	6605-01-234-7441	50926	82A5052A0010
F.4	8	5310-01-067-9589	00724	24-00157-823
F.4	9	5310-00-934-9759	96906	MS35649-284
F.4	10	5310-01-091-1248	96906	MS15795-810
F.4	11	5305-00-990-0675	96906	MS16895-47
F.4	12	1055-01-219-9265	01365	82A5052A0001
F.4	13	5365-00-810-8932	96906	MS16624-1068
F.4	14	5360-01-220-3312	01365	82A5052A0003
F.4	15	NONE	01365	82A5052A0340
F.4	16	5315-00-087-9553	96906	MS16555-645
F.4	17	1055-01-241-2449	01365	82A5052A0341
F.4	18	5306-01-218-8741	01365	82A5052A0002

Table F.24. Figure and Item Number Index (Cont)

FIG NO.	KEY NO.	NATIONAL STOCK NO.	CAGE	DRAWING OR PART NO.
F.4	19	5310-00-913-8881	96906	MS51971-3
F.4	20	5340-01-234-5848	99862	CL-30-HK-4A
F.4	21	5305-00-685-3511	96906	MS35308-306
F.4	22	3040-01-219-6245	01365	82A5052A0016
F.4	23	5315-00-815-1405	96906	MS24665-151
F.4	24	NONE	01365	82A5052A0015
F.4	25	3040-01-221-7824	01365	82A5052A0013
F.4	26	1055-01-218-9098	01365	82A5052A0019
F.4	27	5360-01-239-1431	84830	LE-063F-5SS
F.4	28	5315-00-236-8359	96906	MS24665-370
F.4	29	5340-01 -221-8770	01365	82A5052A0017
F.4	30	5305-00-988-7607	96906	MS16995-35
F.4	31	5315-00-070-3027	96906	MS20392-7C41
F.4	32	5315-00-664-7911	96906	MS9245-47
F.4	33	5310-01-217-7829	01365	82A5052A0012
F.4	34	5380-01-225-2719	01365	82A5052A0014
F.5	1	1055-01-216-9373	01365	82A5052A0330
F.5		NONE	01365	82A5052B0330
F.5	2	1055-01-216-9372	01365	82A5052A0310
F.5	3	1055-01-216-9371	01365	82A5052A0320
F.5		NONE	01365	82A505280320
F.5	4	5315-00-664-7911	96906	MS9245-47
F.5	5	5310-00-167-0822	88044	AN960-716
F.5	6	5315-01-231-3396	96906	MS20392-6C63
F.5	7	1055-01-216-9374	01365	82A5052A0313
F.5		NONE	01365	82A5052B0313
F.5	8	5315-00-903-6754	96906	MS20392-6C73
F.5	9	5340-01-230-0093	01365	82A5052A0324
F.5	10	5315-00-943-2061	96906	MS20392-6C81
F.5	11	5930-01-218-4673	01365	82A5052A0600
F.5	12	NONE	96906	MS21320-3
F.5	13	5935-00-837-6020	96906	MS3100R22-10P
F.5	14	5935-00-451-7564	96906	MS3106F22-10S
F.5	15	5310-00-167-0801	88044	AN960C10
F.5	16	5310-00-933-8120	96906	MS35338-138
F.5	17	5310-00-934-9760	96906	MS35649-204
F.5	18	5305-00-050-9235	96906	MS51957-69

Table F.24. Figure and Item Number Index (Cont)

FIG NO.	KEY NO.	NATIONAL STOCK NO.	CAGE	DRAWING OR PART NO.
F.5	19	5340-00-419-0840	96906	MS21322-35
F.5	20	5305-00-753-7171	96906	MS24630-10
F.5	21	5340-01-433-2327	01365	82A5052A0370
F.5	22	1055-01-216-9370	01365	82A5052A0400
F.5	23	5306-00-720-8260	96906	MS35307-335
F.5	24	5310-00-974-6623	96906	MS35338-140
F.5	25	5310-00-245-3615	96906	MS35649-2314
F.5	26	5310-00-167-0825	88044	AN960-1016
F.6	1	6685-01-236-1384	01365	82A5052A0511
F.6	2	1440-01-424-8405	01365	82A5052C0517
F.6	3	4320-01-072-4918	01365	82A5052A0502
F.6	4	5306-00-543-5570	96906	MS16208-53
F.6	5	5306-01-288-5715	39428	3043T47
F.6	6	5310-01-218-7137	96906	MS51415-7
F.6	7	5310-00-913-8881	96906	MS51971-3
F.6	8	5310-01-216-7390	96906	MS51415-9
F.6	9	5310-00-768-0321	96906	MS51971-5
F.6	10	3040-01-218-6145	01365	82A5052A0501
F.6	11	4730-00-837-8859	96906	MS51811-3SSB
F.6	12	5305-01-007-1517	96906	MS51021-112
F.6	13	4730-00-720-3913	01365	82A5052A0509
F.6	14	4730-01-141-4132	96906	MS51824-5SS
F.6	15	4730-00-892-4587	96906	MS51815-5SS
F.6	16	4720-01-222-8712	01365	82A5052A0506
F.6	17	5310-01-240-7847	01365	82A5052A0500-52
F.6	18	4730-01-219-4277	01365	82A5052A0507
F.6	19	3040-01-237-7045	01365	82A5052A0503
F.6	20	5340-01-420-7647	01365	82A5052A0350
F.6	21	6685-01-221-8778	01365	82A5052A0505
F.6	22	4730-01-116-0429	01365	82A5052A0508
F.6	23	4730-00-965-1232	81343	4-4 080203SA
F.6	24	4730-00-720-2007	96906	MS51819-5SS
F.7	1	4730-01-342-0587	01365	82A5052A2042-1
F.7	2	4730-01-345-4083	81343	12-4 130140CA
F.7	3	3040-01-218-6145	01365	82A5052A0501
F.7	4	4730-01-007-7158	81343	4-4 140131C
F.7	5	6685-01-236-1384	01365	82A5052A0511

Table F.24. Figure and Item Number Index (Cont)

FIG NO.	KEY NO.	NATIONAL STOCK NO.	CAGE	DRAWING OR PART NO.
F.7	6	4320-01-072-4918	01365	82A5052A0502
F.7	7	NONE	81343	NPN
F.7	8	4730-00-090-9205	81348	4-4-140-139CA
F.7	9	4720-01-345-1929	01365	82A5052A2042-3
F.7	10	4730-00-226-8874	81343	2-4 140139C
F.7	11	NONE	01365	NPN
F.7	12	4730-01-342-3428	96906	MS15821-3SS
F.7	13	NONE	01365	NPN
F.7	14	NONE	81346	TYPE 304
F.7	15	4730-00-720-2007	96906	MS51819-5SS
F.7	16	4820-01-220-8019	01365	82A5052A0504
F.7	17	4730-00-720-3913	30780	4-4-G BUSS
F.7	18	4820-01-220-0838	01365	82A5052A0513
F.7	19	NONE	01365	NPN
F.7	20	4720-01-222-8712	01276	FL3336EGG0262
F.7	21	3040-01-341-8630	01365	82A5052A0569
F.7	22	4730-01-219-4277	01365	82A5052A0507
F.7	23	5310-01-240-7847	01365	82A5052A0500-52
F.7	24	6685-01-221-8778	01365	82A5052A0505
F.7	25	4730-01-117-2791	81343	4-4-4 140425S
F.7	26	4730-00-289-5484	01365	82A5052A2041-6
F.7	27	4720-01-342-0597	01365	82A5052A2033
F.7	28	4730-01-167-4388	01276	2024-6-4S
F.7	29	4810-01-351-5845	01365	82A5052A2031
F.7	30	4730-01-242-1284	01276	2045-4-6S
F.7	31	4720-01-346-3945	01365	82A5052A2042-2
F.7	32	4730-00-177-6166	81343	4-4-4 140424C
F.7	33	4730-01-051-9840	01276	2024-4-4S
F.7	34	4720-01-342-6765	01365	82A5052A2032
F.7	35	4730-00-214-8108		J514
F.7	36	5306-01-288-5715	39428	3043T47
F.7	37	5310-00-768-0321	96906	MS51971-5
F.7	38	5310-00-933-8778	96906	MS35338-143
F.7	39	5305-01-007-1517	96906	MS51021-112
F.7	40	5305-01-053-0958	96906	MS51849-14
F.7	41	5310-00-058-3599	96906	MS35335-57
F.7	42	5315-01-348-4999	01365	82A5052A0516

Table F.24. Figure and Item Number Index (Cont)

FIG NO.	KEY NO.	NATIONAL STOCK NO.	CAGE	DRAWING OR PART NO.
F.7	43	5340-01-342-2780	01365	82A5052A0518
F.7	44	5306-01-008-4188	96906	MS16208-37
F.7	45	5310-01-216-5697	96906	MS51415-6
F.7	46	5310-00-245-3615	96906	MS35649-2314
F.7	47	5310-00-043-1680	96906	MS51415-3
F.7	48	5305-00-939-0661	96906	MS51975-1
F.7	49	5310-00-934-9760	96906	MS35649-204
F.7	50	4730-00-289-5191	81343	4-4 140130CA
F.7	51	5310-01-218-7137	96906	MS51415-7
F.7	52	5310-00-913-8881	96906	MS51971-3
F.7	53	5306-00-543-5570	96906	MS16208-53
F.7	54	5340-01-422-4401	01365	82A5052A2027
F.7	55	5305-00-802-0016	96906	MS35307-317
F.7	56	5310-00-933-8121	96906	MS35338-139
F.7	57	5310-01-582-5677	96906	MS15795-810
F.7	58	5310-00-250-9477	96906	MS35649-254
F.7	59	5330-01-226-8756	01365	82A5052A0515
F.7	60	1440-01-424-8402	01365	82A5052A0517
F.7	61	1440-01-424-8405	01365	82A5052C0517
F.7	62	5305-00-764-0064	96906	MS51959-32
F.7	63	5310-00-934-9761	96906	MS35649-264
F.7	64	5310-00-209-1366	96906	MS35335-58
F.7	65	5310-00-934-9748	96906	MS35649-244
F.7	66	5310-00-595-6211	96906	MS15795-803
F.7	67	5305-00-054-5649	96906	MS51957-15
F.7	68	5310-00-933-8118	96906	MS35338-135
F.7	69	5305-00-021-3620	96906	MS35307-307
F.7	70	5340-01-342-2762	01365	82A5052A2026
F.7	71	5306-00-087-1631	96906	MS16208-12
F.7	72	5310-00-903-5966	96906	MS51971-1
F.7	73	5310-01-228-0597	96906	MS51415-5
F.8	1	5305-00-764-0064	96906	MS51959-32
F.8	2	5305-00-939-0661	96906	MS51975-1
F.8	3	5330-01-226-8756	01365	82A5052A0515
F.8	4	5310-00-043-1680	96906	MS51415-3
F.8	5	5310-00-582-5677	96906	MS15795-810
F.8	6	5310-00-934-9760	96906	MS35649-204

Table F.24. Figure and Item Number Index (Cont)

FIG NO.	KEY NO.	NATIONAL STOCK NO.	CAGE	DRAWING OR PART NO.
F.8	7	5310-00-934-9761	96906	MS35649-264
F.8	8	5310-00-702-6286	96906	MS35338-58
F.9	1	5306-00-087-1631	96906	MS16208-12
F.9	2	5310-00-767-0445	96906	MS51971-2
F.9	3	5310-01-216-5697	96906	MS51415-6
F.9	4	5306-01-008-4188	96906	MS16208-37
F.9	5	4820-01-220-0838	01365	82A5052A0513
F.9	6	5315-01-348-4999	01365	82A5052A0516
F.9	7	5305-01-053-0958	96906	MS51849-14
F.9	8	5310-00-058-3599	96906	MS35335-57
F.9	9	5310-00-934-9748	96906	MS35649-244
F.9	10	4820-01-220-8019	01365	82A5052A0504
F.9	11	5330-01-334-9789	59793	SEALKIT KH3/4-6-XX12
F.9	12	5310-01-228-0597	96906	MS51415-5
F.9	13	5310-00-903-5966	96906	MS51971-1
F.10	1	5315-00-269-4038	96906	MS20392-9C51
F.10	2	5310-00-167-0825	88044	AN960-101612
F.10	3	5315-00-059-0491	96906	MS24665-3723
F.10	4	5340-01-420-2921	01365	82A5052A0510
F.10	5	1055-01-421-5299	01365	82A5052A0512
F.10	6	3040-01-237-7045	01365	82A5052A0503
F.10	7	5340-01-420-7647	01365	8ZA5052A0350
F.10	8	5305-00-988-7615	96906	MS16995-51
F.10	9	5310-00-933-8121	96906	MS35338-139
F.10	10	5315-00-904-2807	96906	MS20392-9C89
F.11	1	NONE	26952	F755183
F.11	2	NONE	26952	CF478-030
F.11	3	NONE	26952	G453-107
F.11	4	NONE	26952	CB765-041
F.11	5	NONE	26952	E755-136
F.11	6	NONE	26952	CF543-110
F.11	7	NONE	26952	F745-028
F.11	8	NONE	26952	F540-044
F.11	9	NONE	26952	F745-004
F.11	10	NONE	26952	F747-055
F.11	11	NONE	26952	W222-37
F.11	12	NONE	26952	CF445-040

Table F.24. Figure and Item Number Index (Cont)

FIG NO.	KEY NO.	NATIONAL STOCK NO.	CAGE	DRAWING OR PART NO.
F.11	13	4320-00-135-0800	26952	RC53K
F.12	1	5390-01-301-1871	01365	82A5052A0522
F.12	2	4320-00-997-0810	07505	A1016-070
F.12	3	5340-01-240-7911	26952	A1005098
F.12	4	4930-00-391-1694	26952	DA1572020
F.12	5	4320-00-473-6542	26952	P60-234-1
F.12	6	NONE	26952	H113-236
F.12	7	2530-00-473-6790	07505	P60-306
F.12	8	5365-00-496-6978	07505	W12-185
F.12	9	NONE	07505	S15-167
F.12	10	5306-01-090-6932	26952	A1014110
F.12	11	NONE	26952	B1011016
F.12	12	NONE	26952	B1008016
F.12	13	NONE	26952	A1028-074
F.12	14	5340-00-371-6507	26952	P60-11
F.12	15	3830-00-496-6957	07505	P60-10
F.12	16	3040-00-996-7209	26952	P60-12
F.12	17	5310-00-588-9311	26952	P45139
F.12	18	5305-01-091-2508	26952	P45138
F.12	19	NONE	26952	P60268
F.12	20	5365-01-093-7823	26952	A8061049
F.12	21	4730-01-090-4831	26952	A8018018
F.12	22	4820-00-349-8942	26952	P181190
F.12	23	5330-00-795-4269	07505	B159-167
F.12	24	5365-01-113-5984	26952	DA1574006
F.12	25	5330-00-010-9639	26952	P200-37
F.12	26	NONE	26952	DA1573005
F.12	27	5330-00-251-4732	07505	P60-161
F.12	28	NONE	26952	P141264-1
F.12	29	3895-00-469-6961	26952	P60-51-1
F.12	30	NONE	26952	P60-37
F.12	31	5301-01-091-6032	26952	P60-06
F.12	32	4730-00-089-2515	26952	A8069006
F.12	33	5305-01-186-4963	26952	B1003-046
F.12	34	5310-01-091-1058	26952	81015006
F.12	35	5365-00-496-6977	26952	CA365-024
F.12	36	4820-01-090-6248	26952	CA8610024

Table F.24. Figure and Item Number Index (Cont)

FIG NO.	KEY NO.	NATIONAL STOCK NO.	CAGE	DRAWING OR PART NO.
F.12	37	NONE	26952	1132
F.12	38	4730-00-908-3194	96906	MS35842-11
F.12	99	4320-01-098-1703	26952	P-50K
F.13	1	5935-00-451-7564	96906	MS3106F22-10S
F.13	2	5935-01-182-2571	96906	MS25042-22DA
F.13	3	5930-01-422-1702	01365	82A5052A0808
F.13	4	5355-00-716-6305	96906	MS91528-24B
F.13	5	5995-01-219-3403	01365	82A5052A0802
F.13	6	3935-01-193-5473	81349	M28901/5-01
F.13	7	5330-01-362-2905	88044	AN6227-19
F.13	8	5975-00-296-4093	81349	M19622-01-002
F.13	9	5330-00-202-2586	81349	M19622-17-01
F.13	10	NONE	64696	82A5052A0809
F.13	11	5930-00-432-7034	81349	M378614-5014
F.13	12	5310-01-141-6672	88044	AN960C4
F.13	13	5330-00-950-1970	77820	10-101949-12
F.13	14	5935-01-138-6461	96906	MS3180-12C
F.13	15	5935-01-107-8829	96906	MS3470W12-3S
F.13	16	5935-01-108-8437	96906	MS3476W12-3P
F.13	17	5995-01-218-2417	01365	82A5052A0803
F.14	1	1055-01-343-8527	01365	82A5052A2112
F.14	2	6150-01-348-4036	01365	82A5052A2103
F.14	3	6150-01-347-8428	01365	82A5052A2102
F.14	4	6150-01-347-4724	01365	82A5052A2104
F.15	1	NONE	07907	WP4PKCF
F.15	2	5930-00-811-8351	96906	MS24658-26F
F.15	3	5975-00-296-4093	81349	M119622/1-002
F.15	4	5330-00-202-2586	81349	MS19622/17-01
F.15	5	5330-00-579-3163	96906	MS28775-214
F.15	6	5995-01-219-3403	01365	82A5052A0802
F.15	7	5930-01-436-3144	01365	82A5052A2111
F.15	8	5355-00-716-6305	96906	MS91528-2F-4B
F.15	9	NONE	01365	82A5052A2114
F.15	10	NONE	01375	92A5052A2115
F.15	11	5930-00-810-5410	96906	MS24659-26F
F.15	12	6210-00-115-2591	81349	LC37YD2
F.15	13	6210-00-176-4928	76854	LH89/1

Table F.24. Figure and Item Number Index (Cont)

FIG NO.	KEY NO.	NATIONAL STOCK NO.	CAGE	DRAWING OR PART NO.
F.15	14	6240-00-763-7744	81349	M636318-7
F.15	15	5935-00-158-2494	96906	MS3181-18CA
F.15	16	5305-00-147-3224	96906	MS51861-15C
F.15	17	5935-00-424-9711	96906	MS3470L18-11S
F.15	18	5305-00-067-9864	96906	MS24667-3
F.15	19	5310-00-807-1471	96906	MS2104SL04
F.15	20	5330-00-508-0753	96906	MS52000-6
F.15	21	5925-01-437-5715	01365	82A5052A2116
F.15	22	5935-01-195-2337	96906	MS3181-12CA
F.15	23	5935-01-064-1115	96906	MS3470L12-3P
F.15	24	5330-00-939-0666	96906	MS52000-3
F.16	1	5340-01-285-8978	96906	MS17985C530
F.16	2	5340-01-344-2519	01365	82A5052A2133
F.16	3	5305-00-054-5651	96906	MS51957-17
F.16	4	5310-00-807-1471	96906	MS21042L04
F.16	5	5935-01-182-2571	96906	MS25042-22DA
F.16	6	5975-01-345-2870	01365	82A5052A2108
F.16	7	5305-00-984-6191	96906	M835206-243
F.16	8	5310-00-807-1473	96906	MS21042L08
F.16	9	5935-01-138-6461	96906	MS3180-12CA
F.16	10	5935-01-341-4240	81349	D38999/32W17R
F.17	1	5935-01-084-0809	96906	MS3180-18CAL
F.17	2	5975-01-345-2870	01365	82A5052A2108
F.17	3	5305-00-984-6191	96906	MS35206-243
F.17	4	5310-00-807-1473	96906	MS21042L08
F.17	5	5935-01-341-4240	81349	D38999/32W17R
F.18	1	5935-01-138-6461	96906	MS3180-12CA
F.18	2	5310-00-807-1473	96906	MS21042L08
F.18	3	5305-00-984-6191	96906	MS35206-243
F.18	4	5975-01-345-2870	01365	82A5052A2108
F.19	1	5340-01-342-2819	01365	82A5052A2134
F.19	2	5305-00-983-8084	96906	MS16997-60
F.19	3	5310-00-933-8121	96906	MS35338-139
F.19	4	5340-01-342-2809	01365	82A5052A2012
F.19	5	5305-00-638-8920	96906	MS90728-67
F.19	6	5310-00-984-7042	96906	MS35338-141
F.19	7	5340-01-342-5793	01365	82A5052A2011

Table F.24. Figure and Item Number Index (Cont)

FIG NO.	KEY NO.	NATIONAL STOCK NO.	CAGE	DRAWING OR PART NO.
F.19	8	5305-01-160-0324	96906	MS16997-80L
F.19	9	NONE	01365	82A5052A2019
F.19	10	5315-01-349-9956	01365	82A5052A2014
F.19	11	5306-01-342-4922	01365	82A5052A2006
F.19	12	NONE	01365	82A5052A2005
F.19	13	NONE	01365	82A5052A2021
F.19	14	NONE	01365	82A5052A2020
F.19	15	5935-01-138-6461	96906	MS3180-12CA
F.19	16	5305-00-054-5648	96906	MS51957-14
F.19	17	NONE	01365	82A5052A2059
F.19	18	5306-00-182-2014	88044	AN4H3A
F.19	19	5310-00-807-1471	96906	MS21042L04
F.19	20	NONE	01365	82A5052A2017
F.19	21	NONE	01365	82A5052A2018
F.19	22	NONE	01365	82A5052A2013
F.19	23	5310-00-851-2674	96906	MS35691-1
F.19	24	5340-01-342-2867	01365	82A5052A2015
F.19	25	NONE	01365	82A5052A2016
F.19	26	5360-01-346-2287	01365	82A5052A2022
F.19	27	5305-01-202-2676	80204	B1821BH025C 450N
F.19	28	5310-00-582-5677	96906	MS15795-810
F.19	29	5305-00-056-9961	96906	MS24693-C4
F.19	30	5305-01-342-2415	01365	82A5052A2058
F.19	31	3010-01-352-3054	01365	82A5052A2069
F.19	32	5305-01-165-7527	96906	MS16997-58L
F.19	33	5305-00-940-9448	96906	MS51975-5
F.19	34	5315-00-842-3044	96906	M824665-283
F.19	35	3110-00-691-1356	39317	CYRIS
F.19	36	5315-00-812-3685	96906	MS20392-4C37

THIS PAGE INTENTIONALLY LEFT BLANK

APPENDIX G
ILLUSTRATED LIST OF MANUFACTURED ITEMS

G.1 INTRODUCTION

a. This appendix includes complete instructions for making items authorized to be manufactured or fabricated at organizational or direct support maintenance.

b. Materials needed for manufacture of an item are listed by name and quantity on the illustration.

G.2 MANUFACTURED ITEMS INDEX

Paragraph Number	Manufactured Item	Figure Number
(G.3)	Hydraulic Pumping Unit Repair Tool	G.1
(G.4)	Launcher Rail Alignment Tool	G.2
(G.5)	Launcher Rail Hydraulic and Electrical Systems Protective Cover	G.3
(G.6)	Linear Actuating Cylinder Repair Tool	G.4
(G.7)	Shipping Frame Skid for Mine Clearing Line Charge Launcher	G.5
(G.8)	Mounting Hardware for Mounting the Mine Clearing Line Charge Launcher on the Armored Vehicle Launched Bridge	G.6

G.3 HYDRAULIC PUMP UNIT REPAIR TOOL

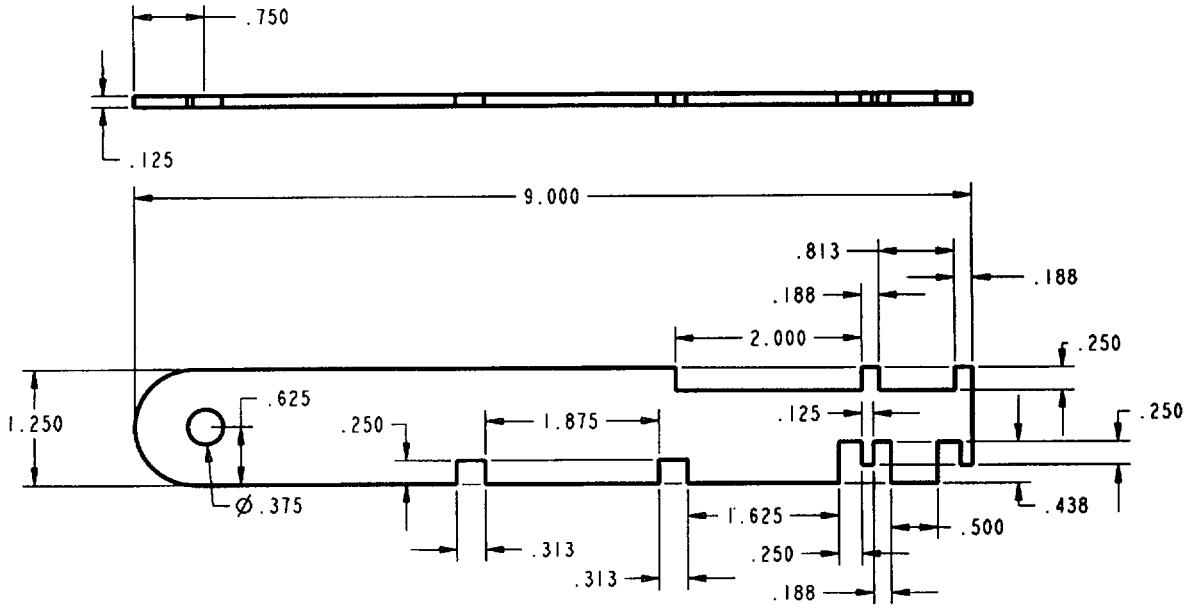

Figure G.1. Hydraulic Pump Unit Repair Tool

G.4 LAUNCHER RAIL ALIGNMENT TOOL

Table G.1. Material Required for Launcher Rail Alignment Tool

DESCRIPTION	NSN	P/N	QTY
Pipe, Metallic, 3/4 inch	4710-01-392-0388	Z-5681010114	AR
Forward Button Lug Band	Obtain from expended MK 22 Rocket, 1340-01-118-2838		

NOTE

- **OBTAIN FORWARD BUTTON LUG BAND FROM AN EXPENDED MK 22 ROCKET (NSN 1340-01-118-2838). THESE ARE FOUR DIFFERENT MODELS OF THIS ROCKET, BUT THE FORWARD BUTTON LUG BANDS FROM ALL OF THE MODELS WILL WORK.**

- **USING READILY AVAILABLE SCRAP STEEL PIPE TO MAKE THE TOOL HANDLE IS AUTHORIZED. THE LENGTH OF THE HANDLE MAY VARY DUE TO PERSONAL PREFERENCE.**

Table G.2 Personnel and Man Hours Required for Launcher Rail Alignment Tool

PERSONNEL REQUIRED	MANHOURS
1 Metal Worker (MOS 1341)	1.0 hour

G.4.1 FABRICATION PROCEDURES

a. Cut pipe IAW dimensions on Figure G.2 (Sheet 1 of 2). Round edges to fit contour of rocket button lug band.

b. Cut forward rocket button lug band approximately 1/4-inch below welds as illustrated. Deburr all cut edges.

c. Align pipe directly under button lug band as illustrated in Figure G.3 (Sheet 2 of 2).

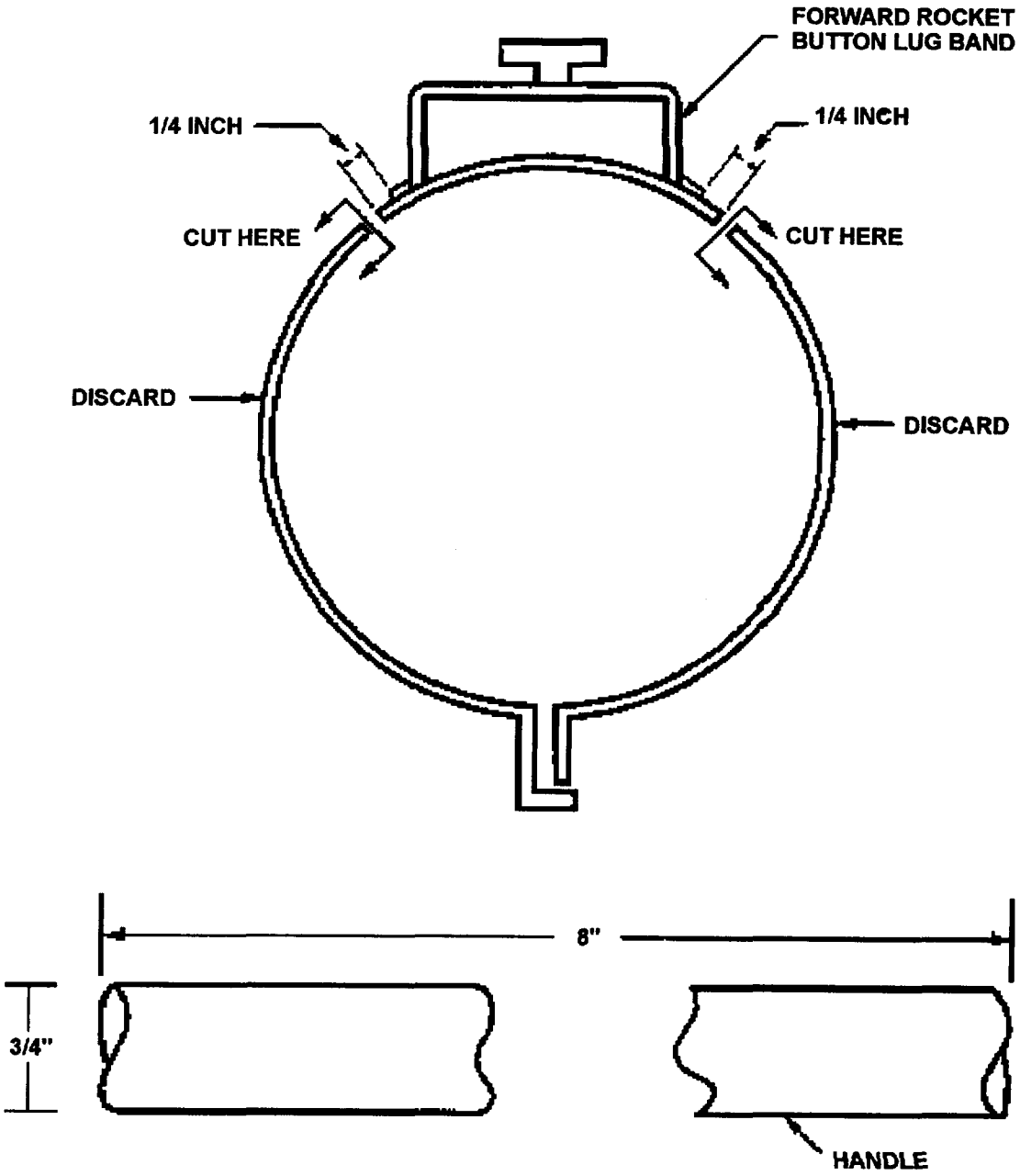

MAKE FROM SUITABLE PIPE SCRAP OD AND LENGTH MAY VARY

Figure G.2. Launcher Rail Alignment Tool (Sheet 1 of 2)

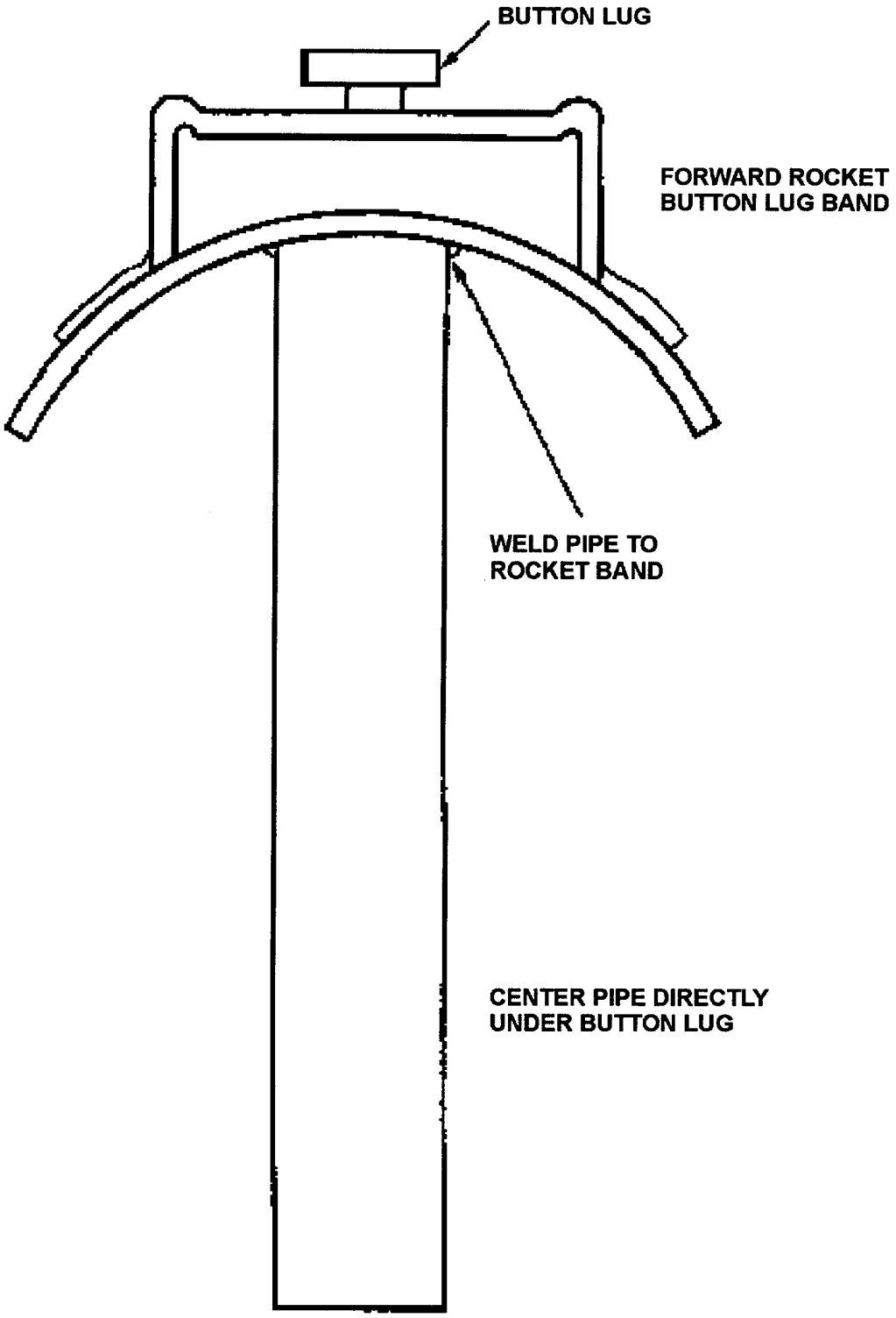

Figure G.2. Launcher Rail Alignment Tool (Sheet 2 of 2)

G.5 LAUNCHER RAIL HYDRAULIC AND ELECTRICAL SYSTEMS PROTECTIVE COVER.

Table G.3. Material Required for Launcher Rail Hydraulic and Electrical Systems Protective Cover

DESCRIPTION	NSN	QTY
Material, Cloth-coated	8305-00-880-8155	6 yards
Grommets, Metal	locally purchase	20
Thread	locally purchase	as required
Tiedowns	locally purchase	as required

Table G.4. Personnel and Man Hours Required for Launcher Rail Hydraulic and Electrical Systems Protective Cover

PERSONNEL REQUIRED	MANHOURS
DOL Upholstery Shop	6.0 hours

G.5.1 FABRICATION PROCEDURES

a. Fabricate protective cover IAW with Figure G.4.

FINISHED COVER

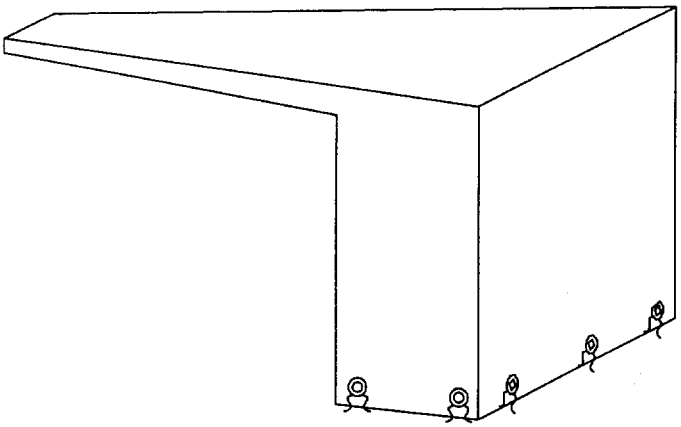

Figure G.3. Launcher Rail and Hydraulic and Electrical Systems Protective Cover (Sheet 1 of 4)

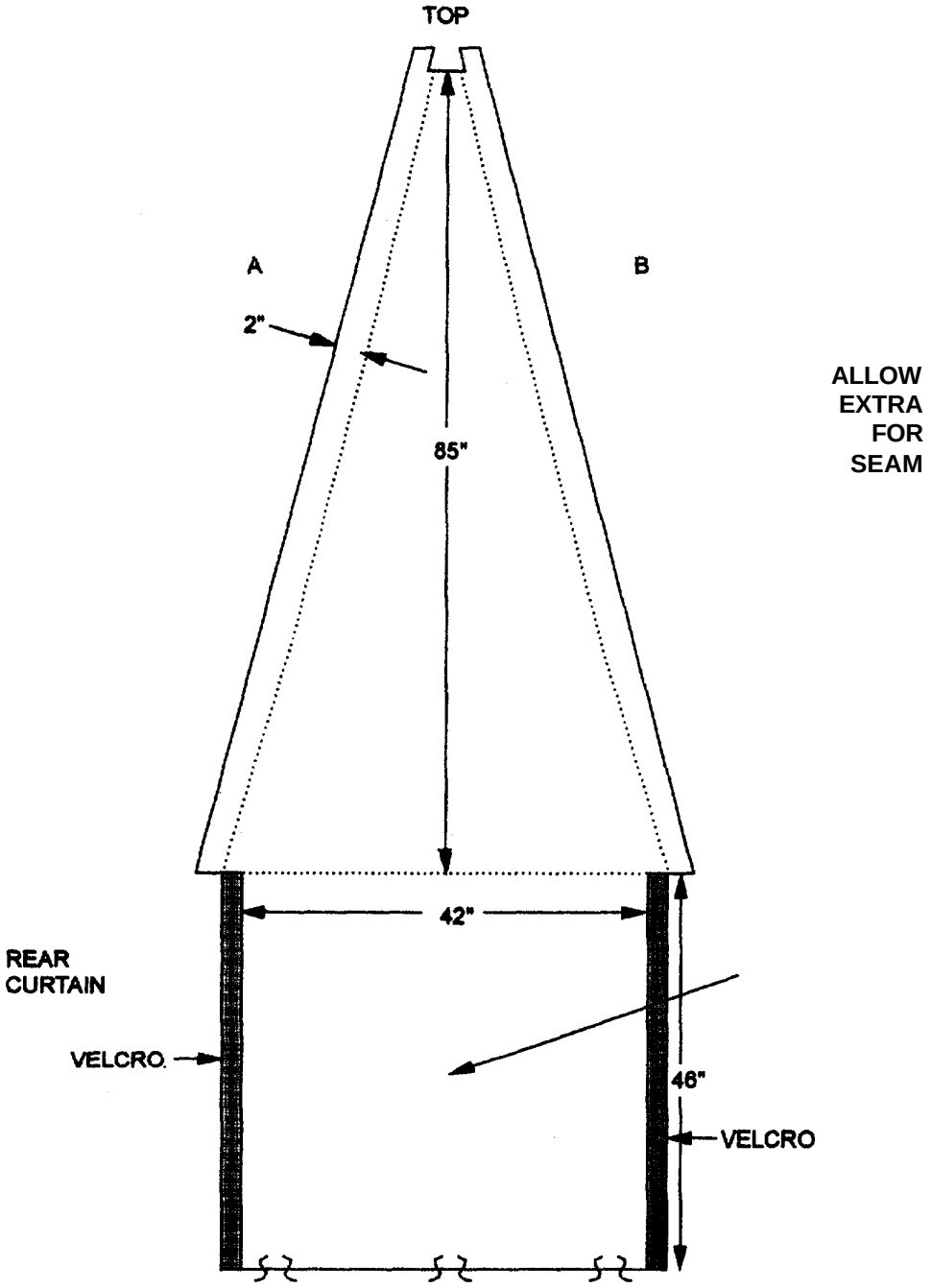

SEW: TOP A TO BOTTOM A
TOP B TO BOTTOM B

FRONT CURTAIN C TO SIDE C AND SIDE TOP A TO TOP A
FRONT CURTAIN D TO SIDE D AND SIDE TOP B TO TOP B

Figure G.3. Launcher Rail and Hydraulic and Electrical Systems Protective Cover (Sheet 2 of 4)

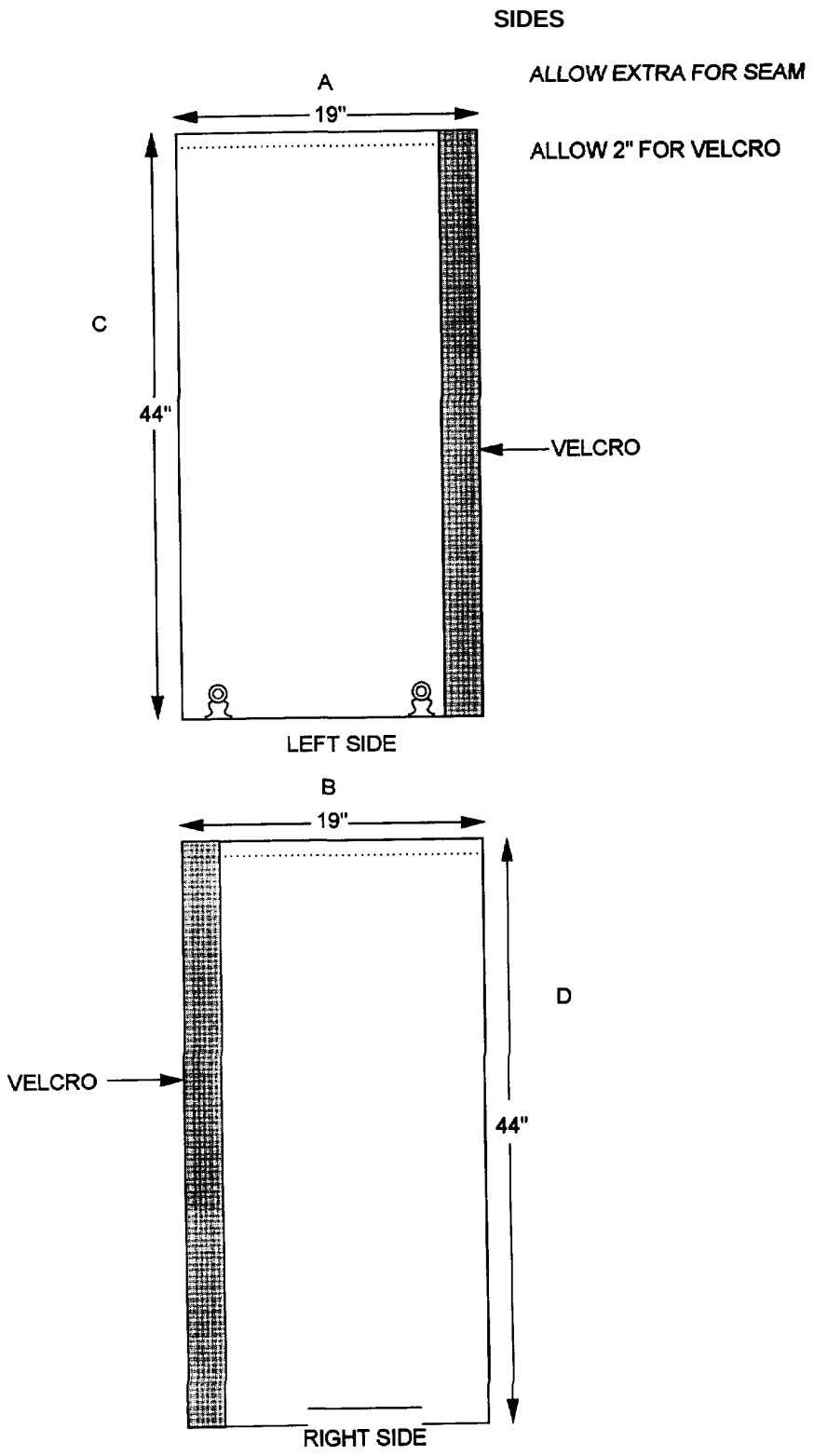

Figure G.3. Launcher Rail and Hydraulic and Electrical Systems Protective Cover (Sheet 3 of 4)

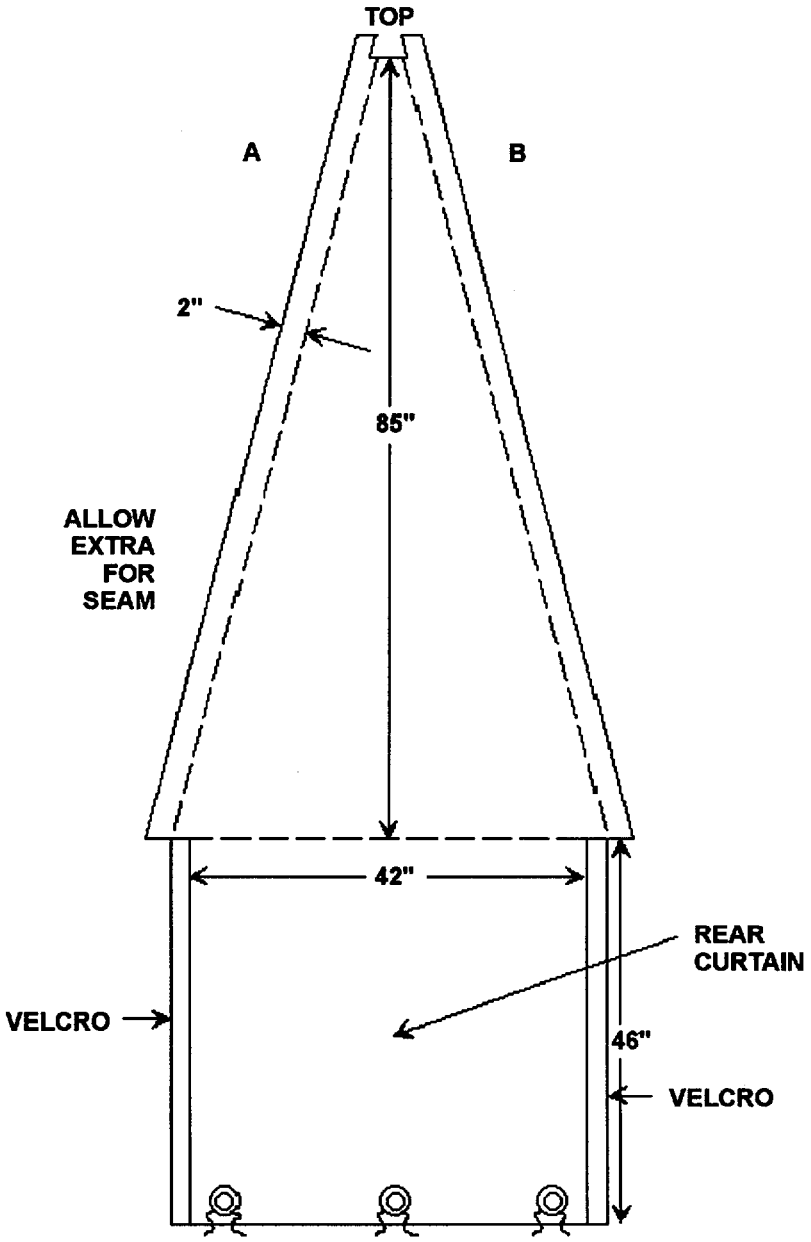

SEW: TOP A TO BOTTOM A
TOP B TO BOTTOM B

FRONT CURTAIN C TO SIDE C AND SIDE TOP A TO TOP A
FRONT CURTAIN D TO SIDE D AND SIDE TOP B TO TOP B

Figure G.3. Launcher Rail and Hydraulic and Electrical Systems Protective Cover (Sheet 4 of 4)

G.6 LINEAR ACTUATING CYLINDER REPAIR TOOL.

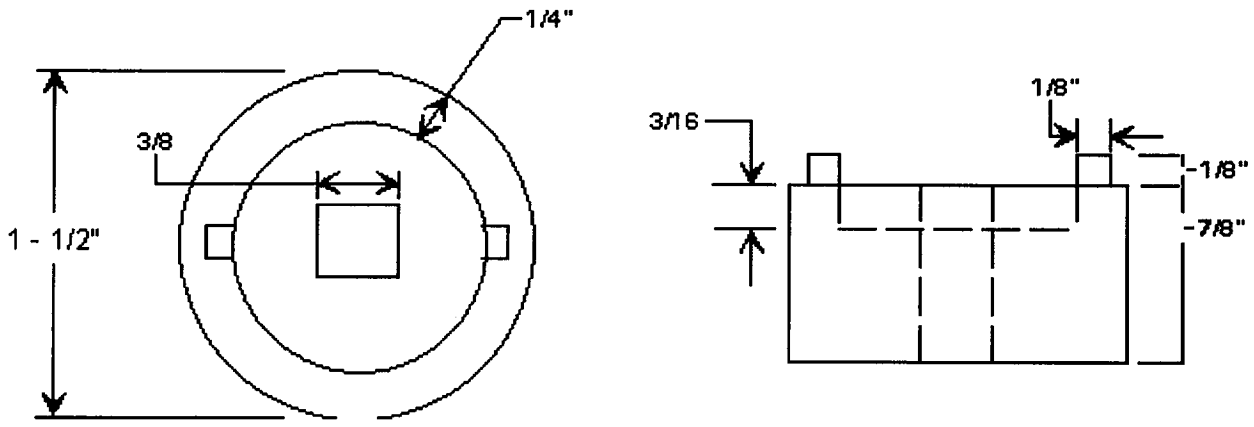

Figure G.4. Linear Actuating Cylinder Repair Tool

G.7 SHIPPING FRAME SKID FOR MINE CLEARING LINE CHARGE LAUNCHER

G.7.1 FABRICATION PROCEDURES

a. Fabricate IAW Figure G.5 (Sheet 2 of 2)

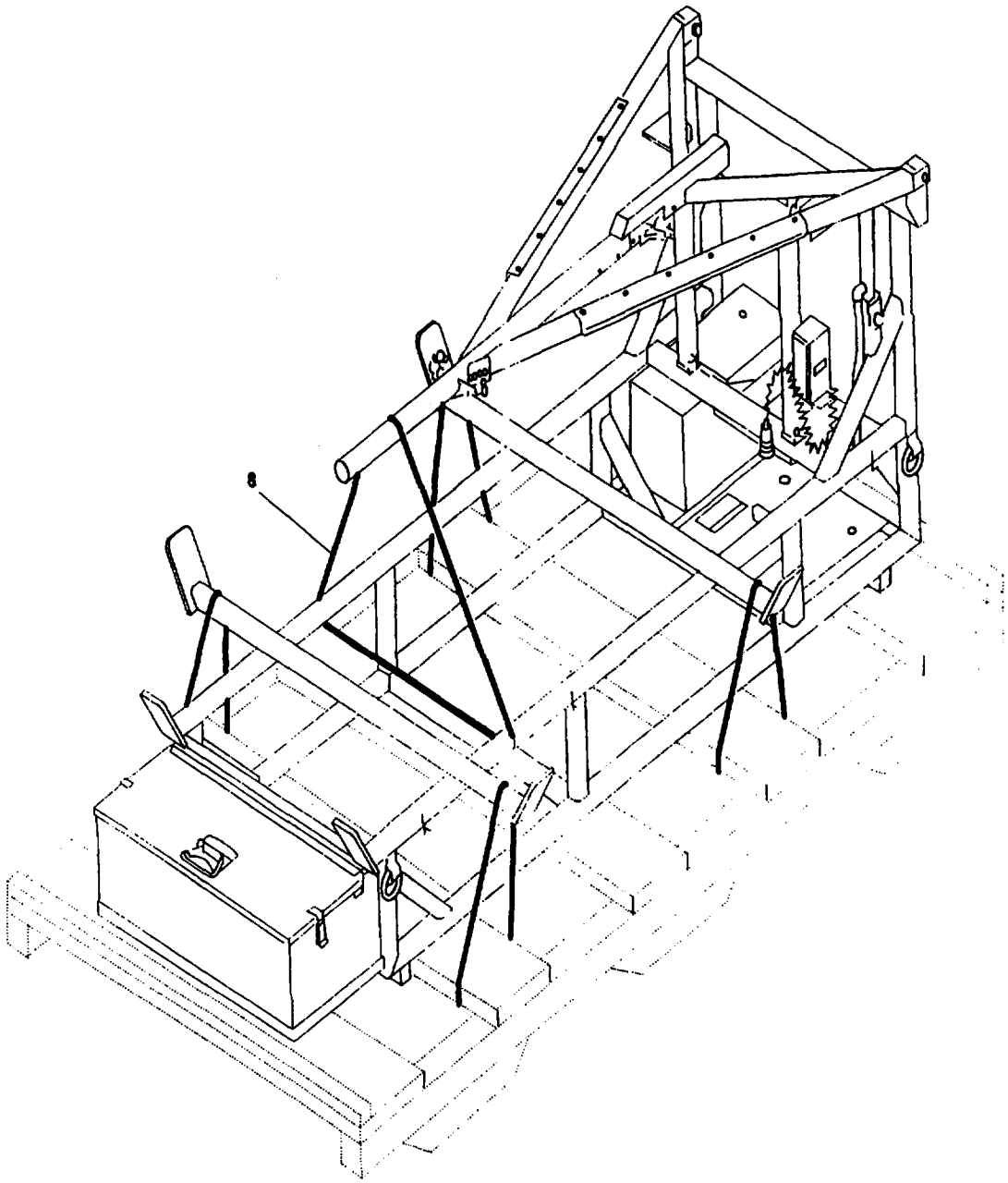

Figure G.5. Shipping Frame Skid for Mine Clearing Line Charge Launcher (Sheet 1 of 2)

Table G.5. Materials Required for Shipping Frame for Mine Clearing Line Charge Launcher

Number	Qty	Item	Length	Notes
1	4	2 x 4	67"	End cap
2	2	2 x 10	67"	Crossmember
3	3	2 x 8	67"	Crossmember
4	3	4 x 4	122"	Frame
5	9	4 x 4	24"	Skids
6	4	2 x 4	12"	Bracing
7	6	Bolts, Washers	AR	Anchor end caps (see illustrations)
8	5	3/4 Banding	AR	Tie downs Launcher rail to frame Launcher crossmember to shipped frame. (see illustrations)
9	AR	Plastic wrap as required. Polyolefin, Type 5 Class 3 Grade B & Finish 1	AR	Cover

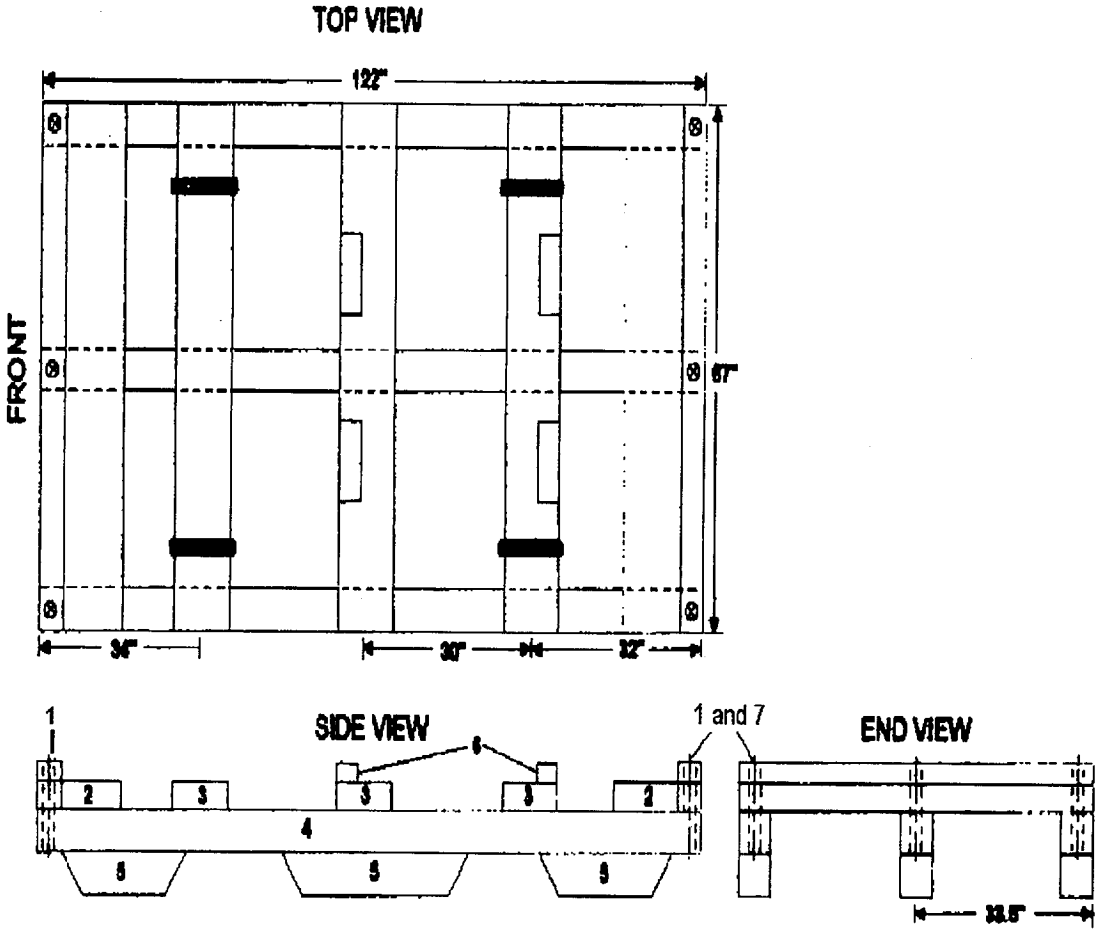

Figure G.5. Shipping Frame Skid for Mine Clearing Charge Launcher (Sheet 2 of 2)

G.8 HARDWARE FOR MOUNTING THE MICLIC LAUNCHER ON THE ARMORED VEHICLE LAUNCHED BRIDGE.

Table G.6. Material Required for Mounting Hardware for Mounting the Mine Clearing Line Charge Launcher on the Armored Vehicle Launched Bridge

DESCRIPTION	FIND NO.	MATERIAL	QTY
C-Channel	1	American Standard Channels 616.3, ASTM A36	2
I-Beam	2	American Standard I-Beam 8123.0, ASTM A36	1
Steel Plate	3	ASTM A36 Mild Carbon Steel or equivalent	4
Round U-Bolt	4	Medium Carbon Steel, AISI 1040-1045, 3/4 ROD	4

NOTE

- **GENERAL TOLERANCES TO BE ± 1/16 INCH.**
- **FINISH WITH PROTECTIVE FINISH 4.1 PLUS 20.24 OF MIL-STD-171, COLOR GREEN 34094, OR TAN 33446 OF FED-STD 595 AS REQUIRED TO MATCH HOST VEHICLE.**

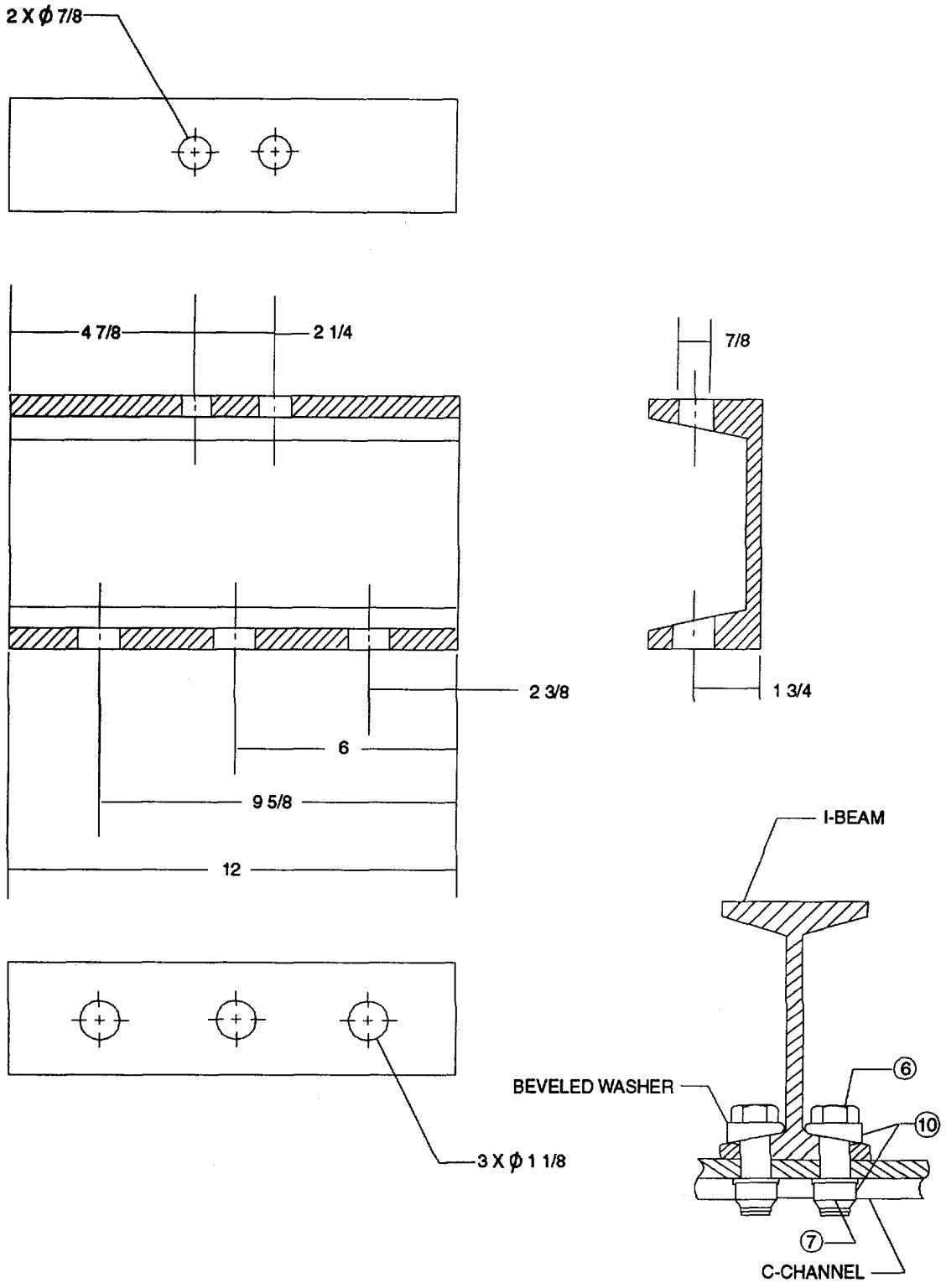

Figure G.6. C-Channel used for Mounting the Mine Clearing Line Charge Launcher on the Armored Vehicle Launched Bridge (Sheet 1 of 3)

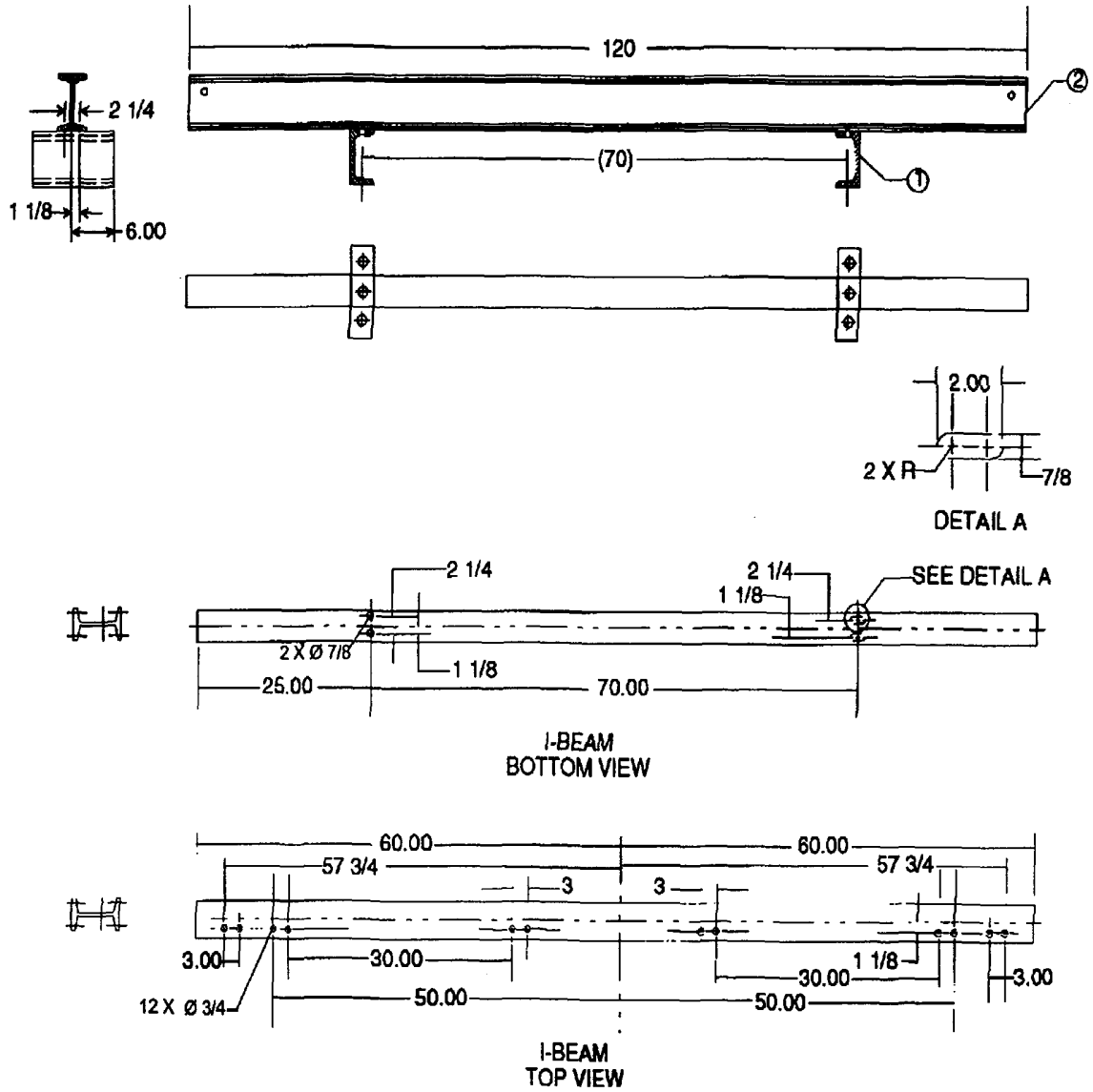

Figure G.6. I-Beam used for Mounting the Mine Clearing Line Charge Launcher on the Armored Vehicle Launched Bridge (Sheet 2 of 3)

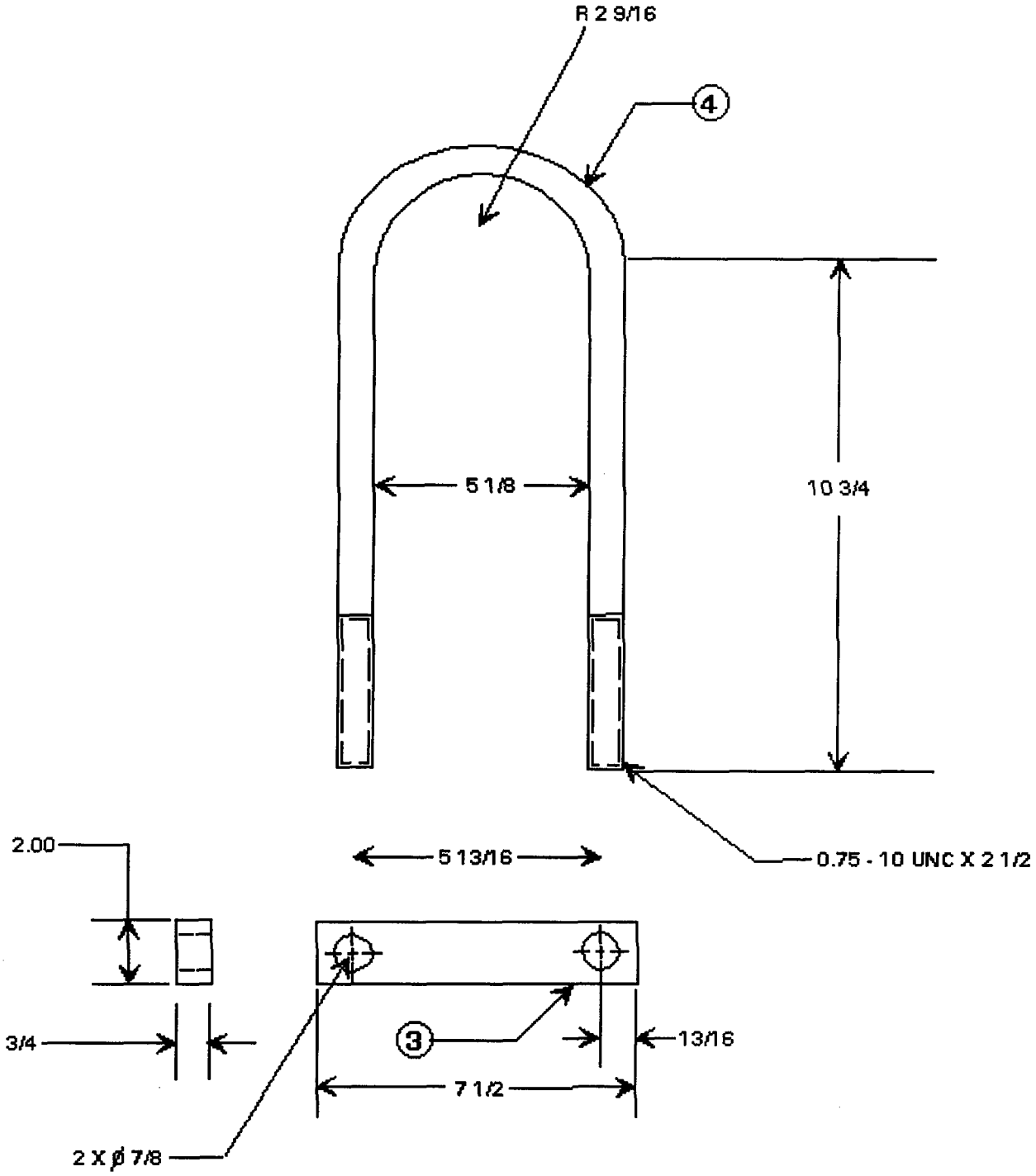

Figure G.6. U-Bolt and Plate used for Mounting the Mine Clearing Line Charge Launcher on the Armored Vehicle Launched Bridge (Sheet 3 of 3)

THIS PAGE INTENTIONALLY LEFT BLANK.

APPENDIX H
STOWAGE AND SIGN GUIDE

H.1 SCOPE. This appendix shows the equipment to be stowed and the material to be carried on the four models of the MICLIC.

H.1.1 MOD 0/1 Launcher. The storage container is welded to the towing end of the launcher frame. See Figure H.1 for how to stow equipment and material.

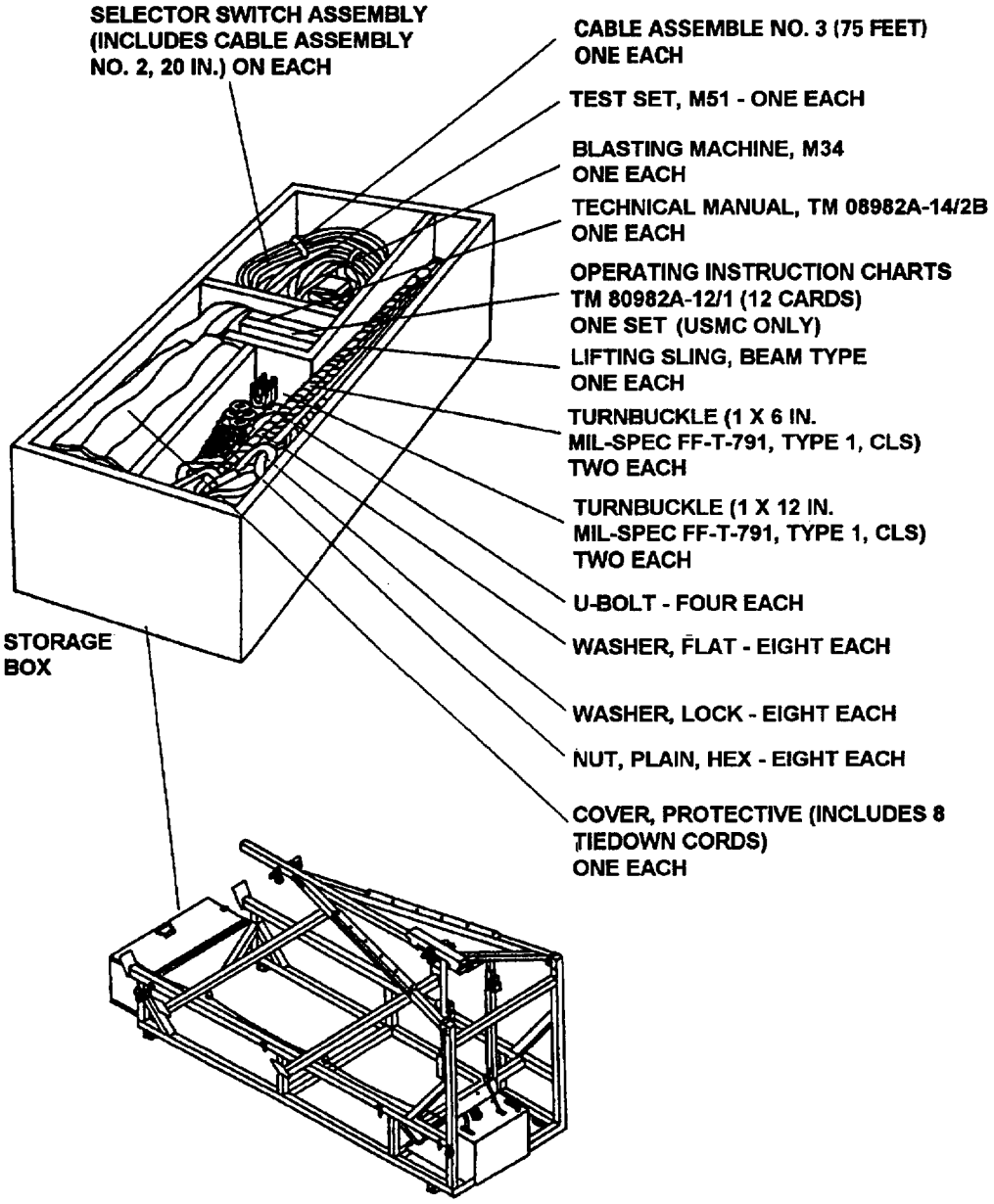

Figure H.1. Storage Box on MK 155 MOD 0/1 Mine Clearing Line Charge Launcher

H.1.2 MOD 9/3 Launcher. The MOD 2/3 Launcher has two stowage containers (see Figure H.2):

- a storage container welded to towing end of launcher frame
- a storage case bolted to rear of launcher frame next to hydraulic controls.

Table H.1. Accessories, Tools and Equipment in Storage Container at Towing End of Launcher Frame

ITEM	USE	QTY
Lifting Sling	Load launcher and charge container.	1
Turnbuckle Short (Front)	Secure charge container to trailer chassis.	2
Turnbuckle Rear (Rear)	Secure charge container to trailer chassis.	2
U-bolts, with flatwashers, lockwashers and hex nuts	Secure launcher to trailer chassis.	4
Nylon Cover	Covers line charge until ready for firing.	1
M51 Blasting Cap Test Set	Used to test continuity of electrical circuits.	1
M34 Blasting Machine	Used to ignite rocket and detonate the line charge.	1
Trailer Quick Disconnect Device	Provides a remote method of quickly disconnecting the trailer from the towing vehicle.	1
Technical Manual (TM) 9-1375-215-13&P	A technical reference for the operator and the maintenance technician.	1

Table H.2. Accessories, Tools and Equipment Stored in the Charge Container

ITEM	USE	QTY
Spare Parts Kit	Contains spare cotter pins and shorting plug.	1

Table H.3. Accessories Stored in the Spare Pans KR

ITEM	USE	QTY
Cotter Pin	To be used as a replacement for cotter pin used in deploying the M1147 fuze (inert) only.	3

Table H.4. Equipment in Storage Case at Rear of Launcher Frame Next to Hydraulic Controls

ITEM	USE	QTY
Selector Switch Assembly	Electrical switch of power source used for testing, firing rocket motor and detonating the linear demolition charge.	1
W3 Cable	Joins the selector switch assembly to the W5 branched cable at the quick disconnect device.	1
W5 Branched Cable	Connects the quick disconnect device to the safety switch and the solenoid.	1
W6 Cable Assembly	Connects the selector switch assembly to the NATO power source.	1

Legend:

(1) Storage Container (Front)
(2) Storage Container (Rear)

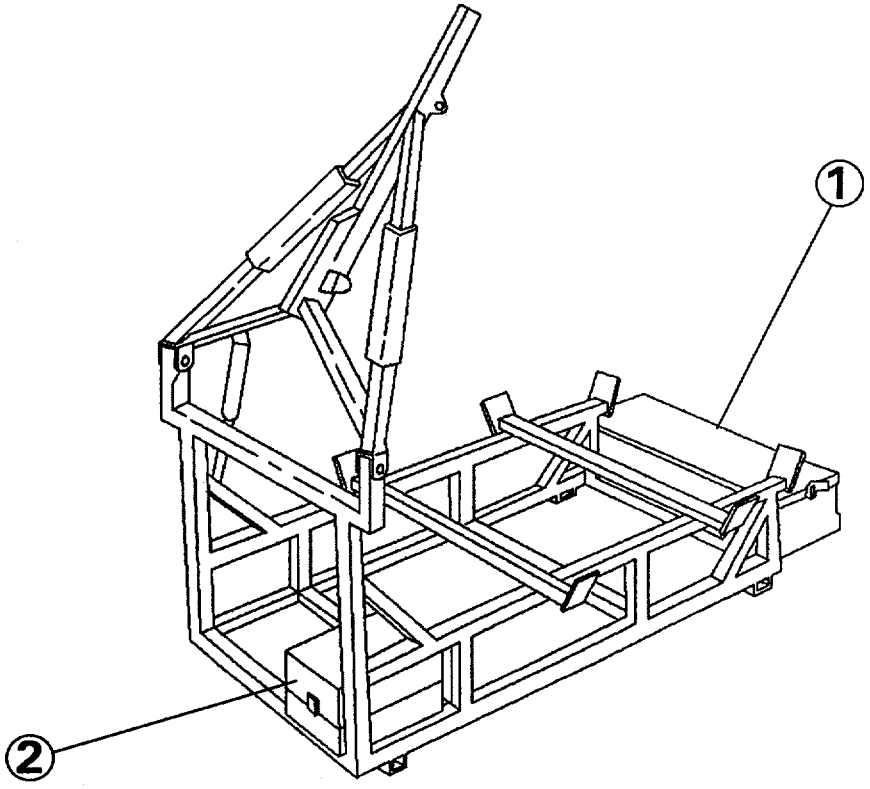

Figure H.2. Storage Boxes on MK 155 MOD 2/3 Mine Clearing Line Charge Launcher

THIS PAGE INTENTIONALLY LEFT BLANK.

APPENDIX I
OPERATING INSTRUCTION CHARTS

Chart I.1 MK 2 MOD 0 Mine Clearance System

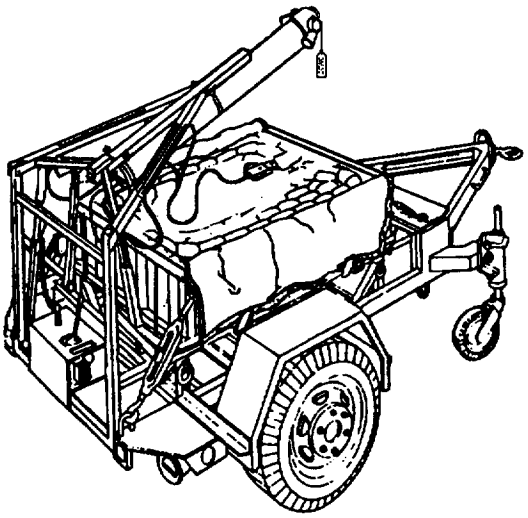

NOMENCLATURE	LENGTH	WIDTH	HEIGHT	WEIGHT (lbs)
M353 3-1/2 Ton Trailer	187.5"	95.88"	48.25"	2,850
M58A4 HE Linear Demo Charge DODIC M913	83.25"	53.75"	24"	2,850
M68A2 Inert Linear Demo Charge DODIC M914	83.25"	53.75"	24"	2,790
MK 22 MOD 4 Rocket Motor DODIC J143	76.81"	5"	-	128
MOD 0 Launcher (Zero Elevation)	112"	64.5"	49"	940

Chart I.1 MK 2 MOD 0 Mine Clearance System (Cont)

BASIC ISSUE ITEMS	
QTY	**DESCRIPTION**
4	Turnbuckles, 2-Long (Rear) NSN 5340-01-249-0589, 2-Short (Front) NSN 5340-01-248-7962
1	Lanyard Assembly (Remote Raise)
1	75' Electrical Cable NSN 5995-01-218-2417
1	M34 Blasting Machine - NSN 1375-00-567-0223
1	M51 Circuit Test Set - NSN 4925-00-999-3454
1	Protective Cover - NSN 1055-01-216-9423
1	Selector Switch Assembly - NSN 6150-01-225-5866
1	Sling, Beam Type - NSN 3940-01-218-2823
4	U-Bolts - NSN 5306-01-226-8720
4	Flat Washers - NSN 5310-00-491-5895
4	Lock Washers - NSN 5310-00-937-0453
4	Hex Nuts - NSN 5310-00-764-6609
2	Shackles (Use With MOD 3 Launcher) - NSN 4030-01-136-4535
2	Open End Wrenches - NSN 5120-00-423-6728
1	Socket 1/2" Square Drive - NSN 5120-00-935-7452

Chart I.2 Load/Unload Launcher

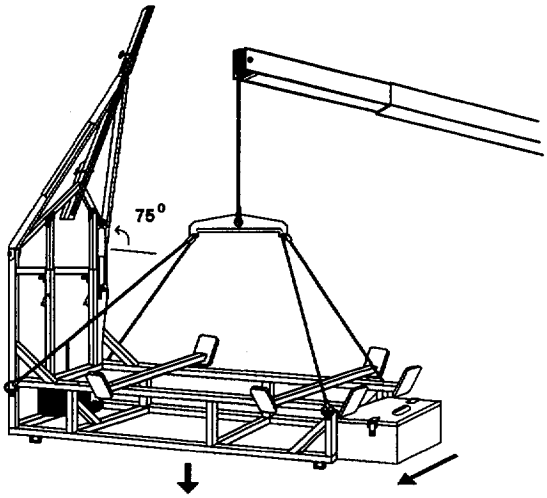

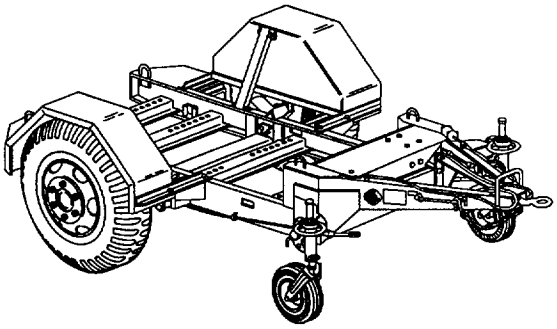

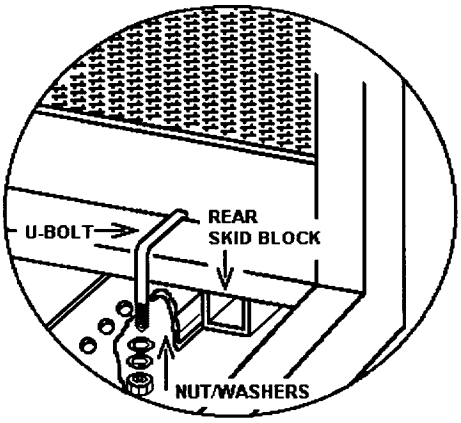

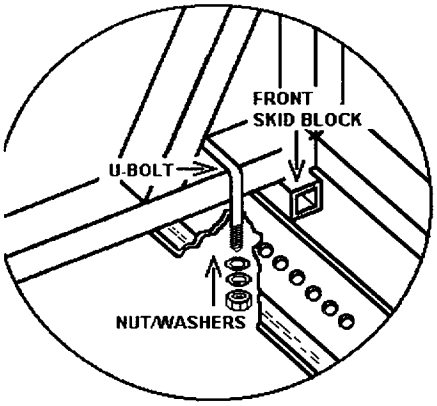

THIS PAGE INTENTIONALLY LEFT BLANK

Chart I.3 Load/Unload Linear Demolition Charge

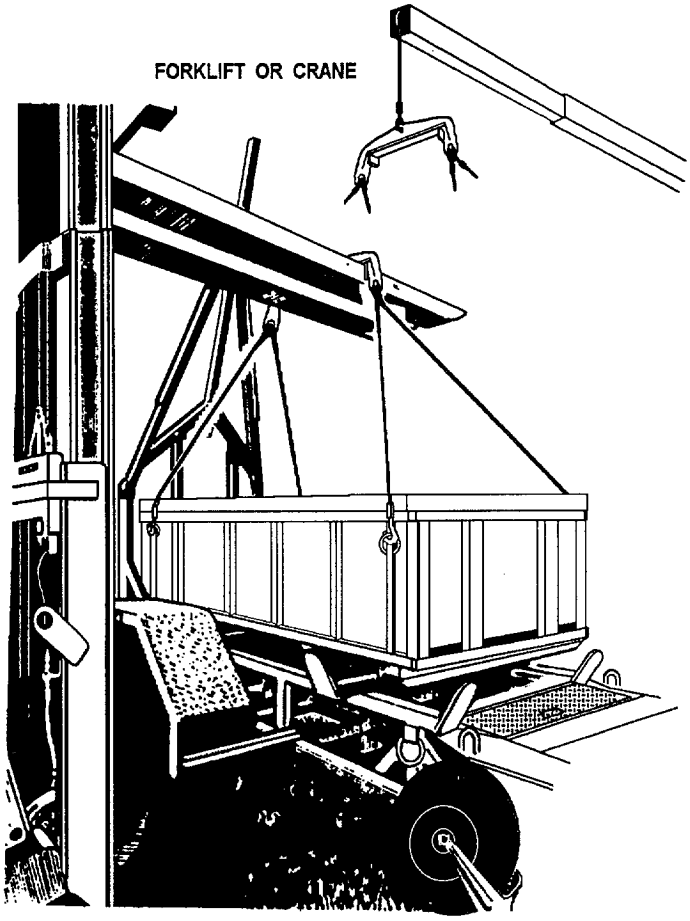

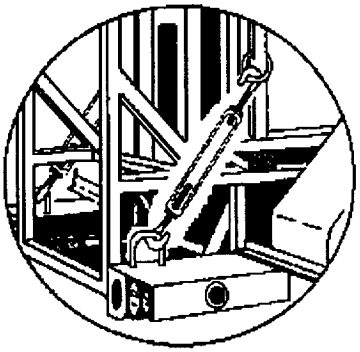

Long Turnbuckle Rear

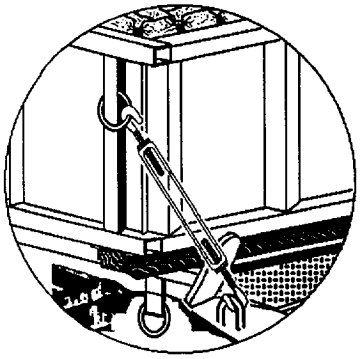

Short Turnbuckle Front

Chart I.4 To Manually Raise Launch Rail

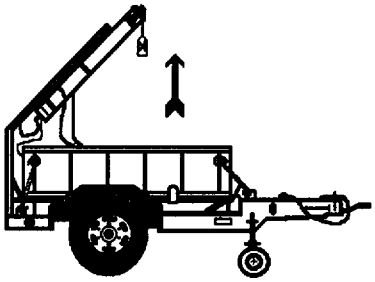

Step 1: Ball lock pin engage in RAISE position.

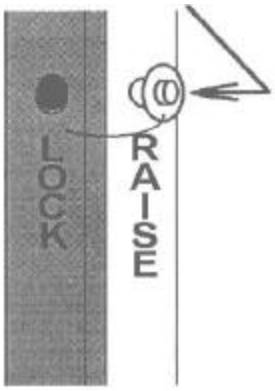

Step 2: Detent in position (down).

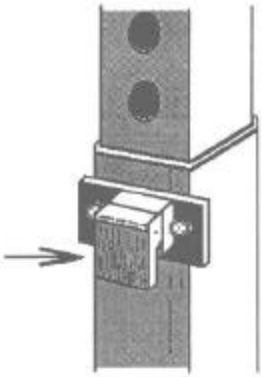

Chart I.4 To Manually Raise Launch Rail (Cont)

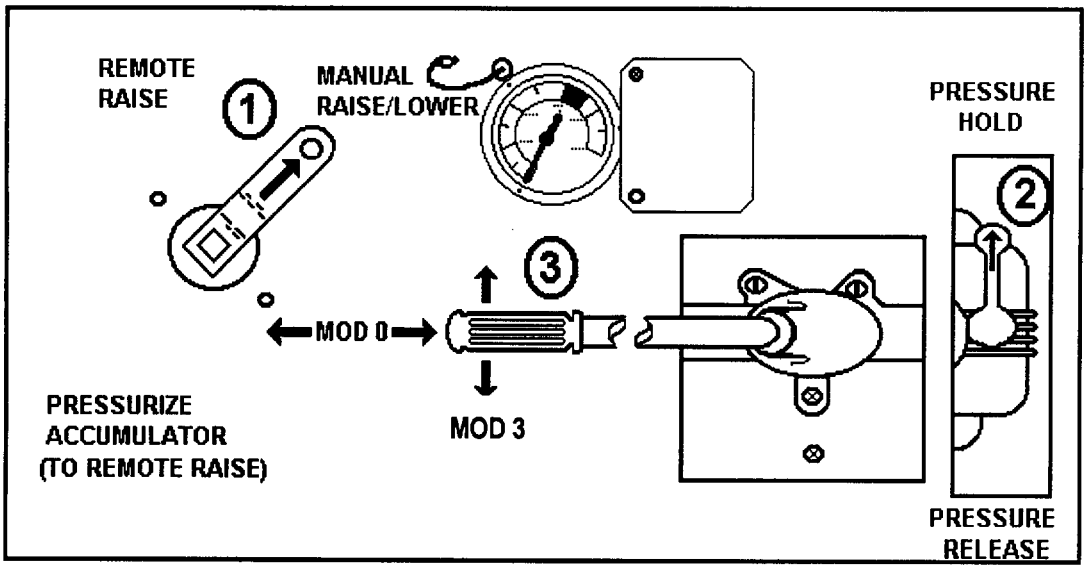

Hydraulic Control Panel

Step 3: Move hydraulic valve handle (1) to MANUAL RAISE/LOWER position.

Step 4: Move hydraulic pump lever (2) to PRESSURE HOLD position.

Step 5: Activate hydraulic pump handle (3) in proper direction until desired rail elevation is obtained.

Chart I.5 To Lower Launch Rail

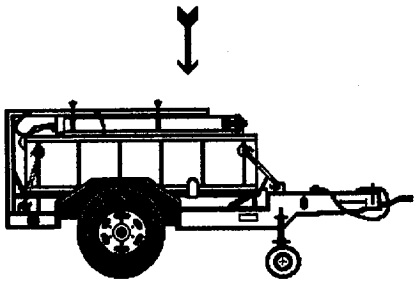

Step 1: Ball lock pin in RAISE position.

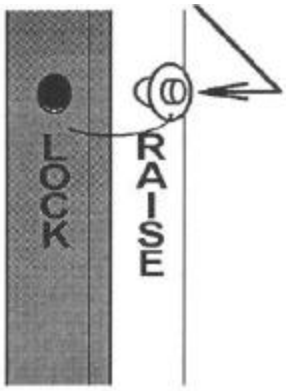

Step 2: Detent in disengage position (up).

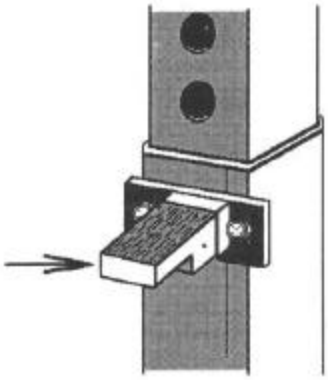

Chart I.5 To Lower Launch Rail (Cont)

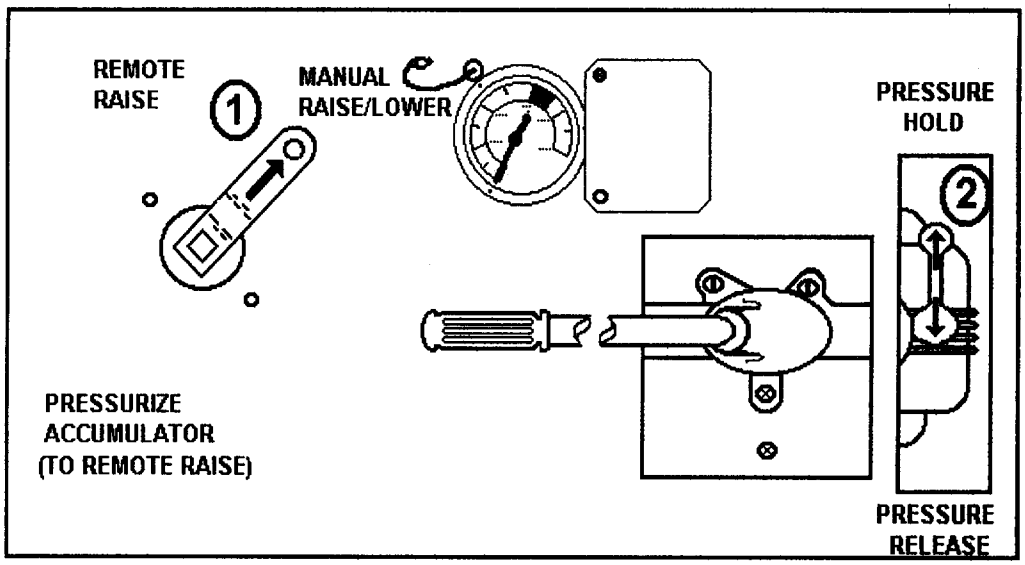

Hydraulic Control Panel

Step 3: Hydraulic valve handle (1) in MANUAL RAISE/LOWER position.

Step 4: Slowly feather hydraulic pump lever (2) between PRESSURE HOLD and PRESSURE RELEASE until launch rail is down.

THIS PAGE INTENTIONALLY LEFT BLANK

Chart I.6 Securing Launcher

Step 1: Ensure ball lock pin is in LOCK (stow) position.

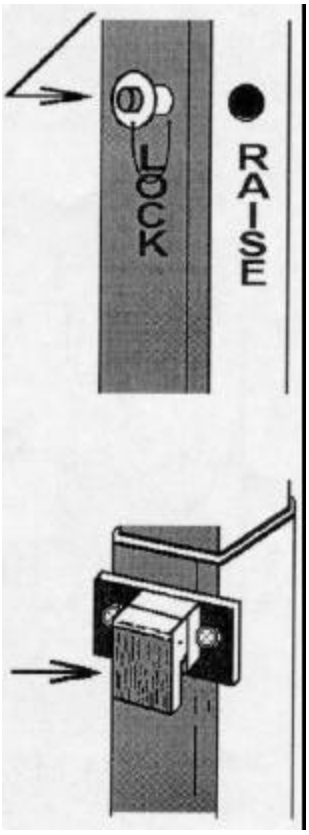

Step 2: Ensure detents are in the engaged (down) position.

Step 3: Use rocket motor packing material under rocket motor nozzle as cushioning.

Step 4: Use tie down or bungee straps to secure rocket and launch rail in down position.

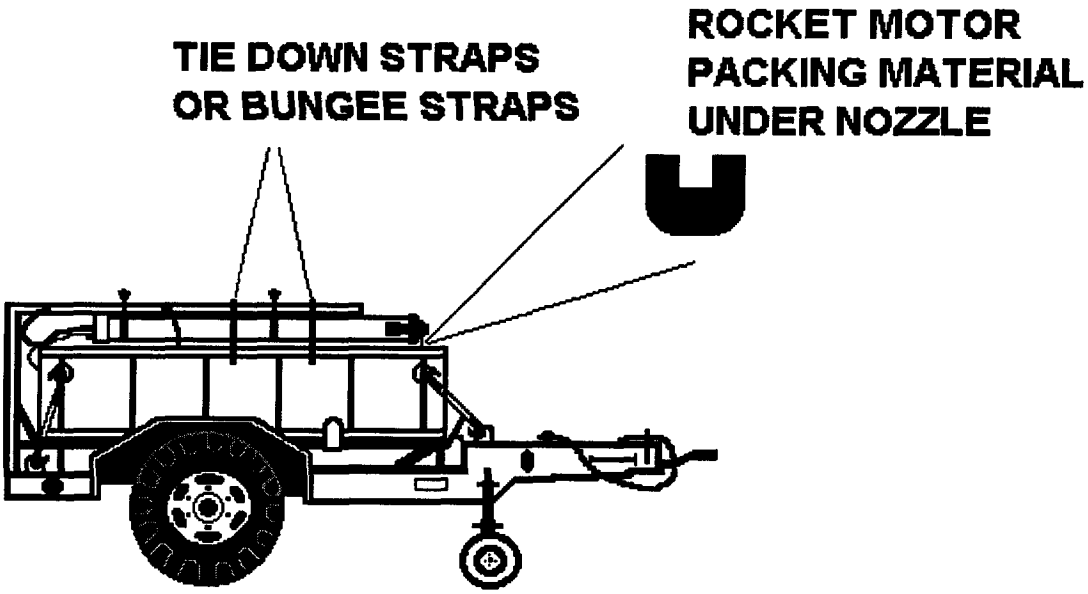

Chart I.7 Launch Rail Down Continuity Checks

Step 1: Remove dust cover from container junction box power receptacle (A) (Top, number 1 receptacle on container). Disconnect P-1 electrical connector (B) from J-1 safety switch assembly on launcher. Connect P-1 electrical connector (B) to the container junction box power receptacle (A).

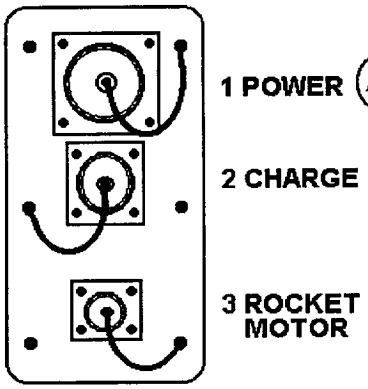

Container Junction Box

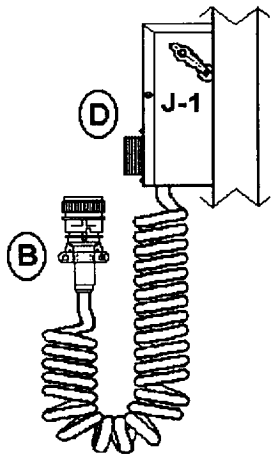

Launcher Safety Switch Assembly

Step 2: Connect four pin female end of W-3 electrical cable (C) to the launcher J-1 safety switch assembly receptacle (D).

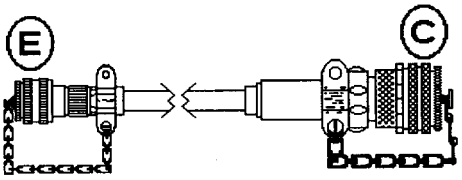

W-3 Cable (75 Feet)

Step 3: Connect the three pin male end of the W-3 electrical cable (E) to the selector switch assembly (F).

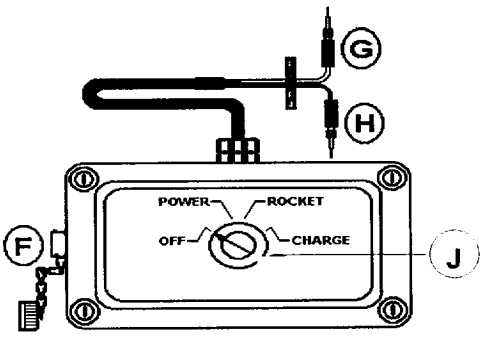

Selector Switch Assembly

Step 4: Connect selector switch assembly leads P-3 (G) and P-4 (H) to the M-51 test set.

Chart I.7 Launch Rail Down Continuity Checks (Cont)

Step 5: Pull up and turn control knob (J) on selector switch assembly until the indicator on the control knob (J) is pointing to the power position. Operate the M-51 test set.

Step 6: The red diode (light)(I) in the M-51 test set should flash.

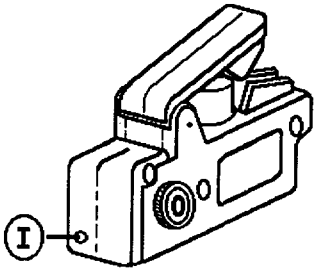

Test Set (M-51)

Step 7: Pull up and turn control knob (J) on selector switch assembly until the indicator on the control knob (J) is pointing to the rocket motor position. Operate the M-51 test set. The red diode (light)(I) in the M-51 test set should not flash.

Step 8: Pull up and turn control knob (J) on selector switch assembly until the indicator on the knob is pointing to the charge position. Operate the M-51 test set. The red diode (light) (I) in the M-51 test set should not flash.

Step 9: Pull up and return the control knob to the off position.

Chart I.8 Launch Rail Raised to 45-47 Degrees Continuity Checks

Step 1: Ensure W-3 electrical cable is properly connected to launcher J-1 safety switch assembly receptacle and selector switch assembly, test set (M-51) connected to leads P-3 and P-4 of the selector switch assembly and the P-1 electrical connector connected to the container junction box power receptacle.

Step 2: Remove dust covers from container junction box charge receptacle (A) and rocket motor receptacle (B) insert male shorting plug (C) into container junction box charge receptacle (A) (Receptacle number 2).

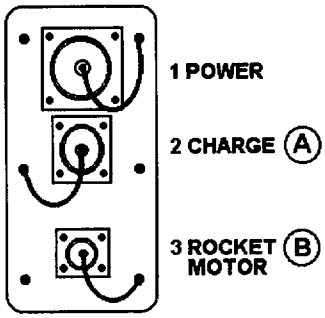

Container Junction Box

Male Shorting Plug

Female Shorting Plug

Step 3: Insert female shorting plug (D) into container junction box rocket motor receptacle (B).

Step 4: Pull up and turn control knob (E) on selector switch assembly until the indicator on the control knob (E) is pointing to the power position. Operate the M-51 test set.

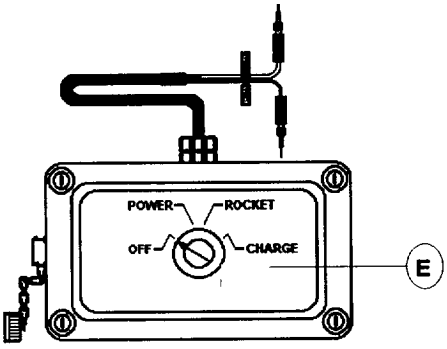

Selector Switch Assembly

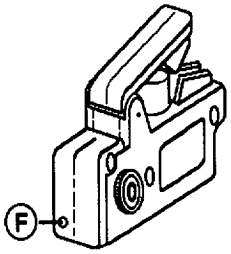

Test Set (M-51)

Step 5: The red diode (light) (F) in the M-51 test set should flash.

Step 6: Pull up and turn control knob (E) on selector switch assembly until the indicator on the control knob (E) is pointing to the rocket motor position. Operate the M-51 test set.

Chart I.8 Launch Rail Raised to 45-47 Degrees Continuity Checks (Cont)

Step 7: The red diode (light) (F) in the M-51 test set should flash.

Step 8: Pull up and turn control knob (E) on selector switch assembly until the indicator on the knob is pointing to the charge position. Operate the M-51 test set.

Step 9: The red diode (light) (F) in the M-51 test set should flash.

Step 10: Pull up, return the control knob (E) to the off position and remove shorting plugs (C) and (D).

Chart I.9 Arresting Cable Inspection and Fuze Connection

Step 1:

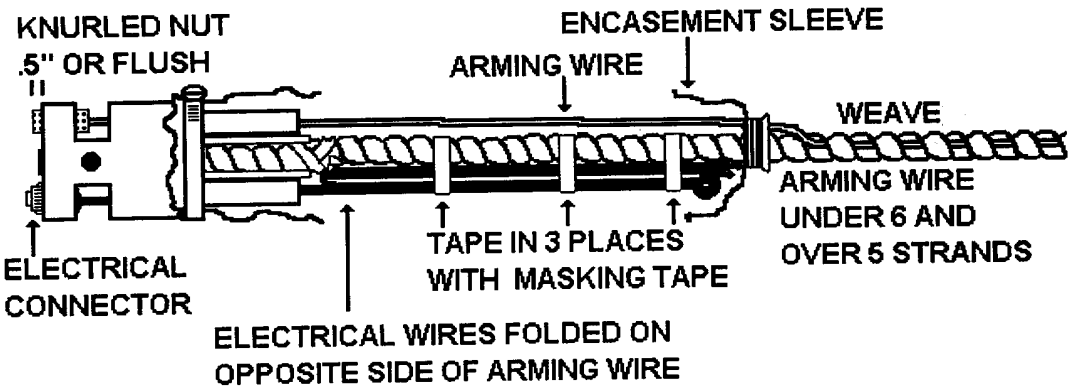

Step 2:

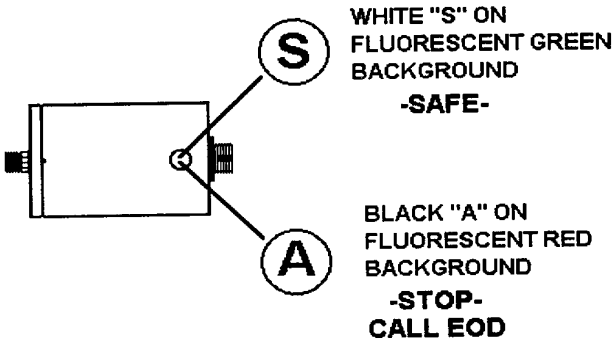

CHECK FOR SAFE FUZE

Step 3:

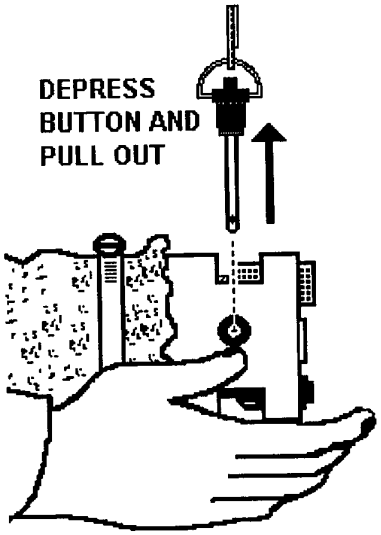

Chart I.9 Arresting Cable Inspection and Fuze Connection (Cont)

Step 4:

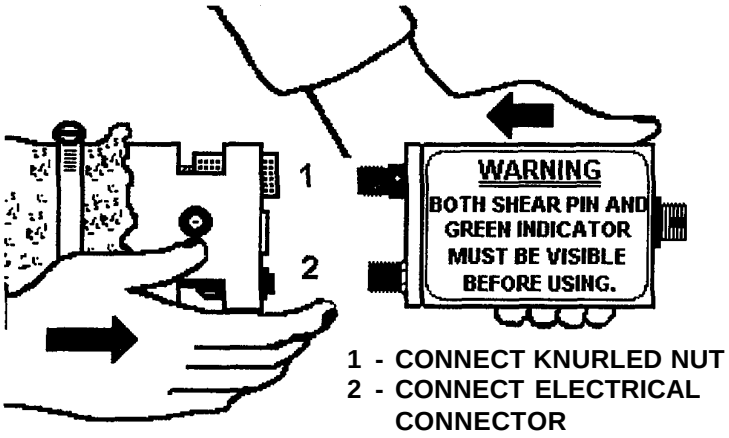

Step 5:

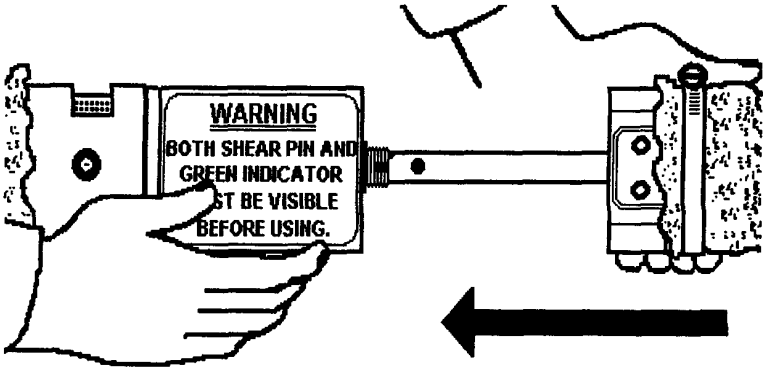

SLIDE SHAFT THROUGH FUZE, WHEN SHAFT BOTTOMS OUT, PUSH AND ROTATE TO INSURE FUZE CONNECTOR IS SEATED.

Step 6:

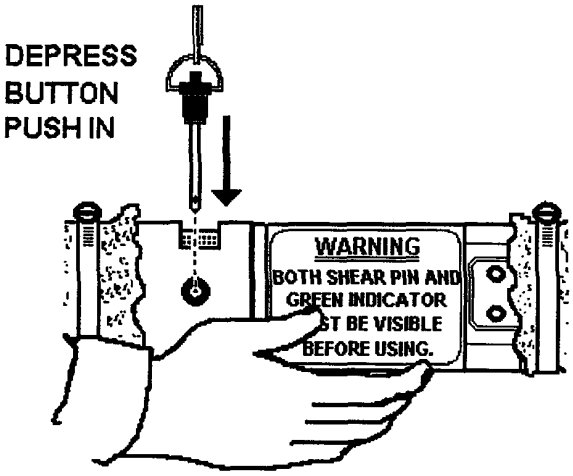

THIS PAGE INTENTIONALLY LEFT BLANK

Chart I.9 Arresting Cable Inspection and Fuze Connection (Cont)

Step 7:

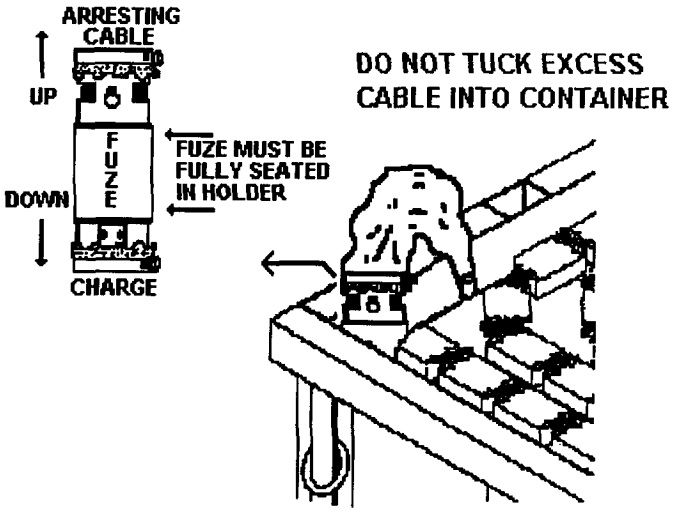

SECURE FUZE INTO CONTAINER FUZE HOLDER

Step 8:

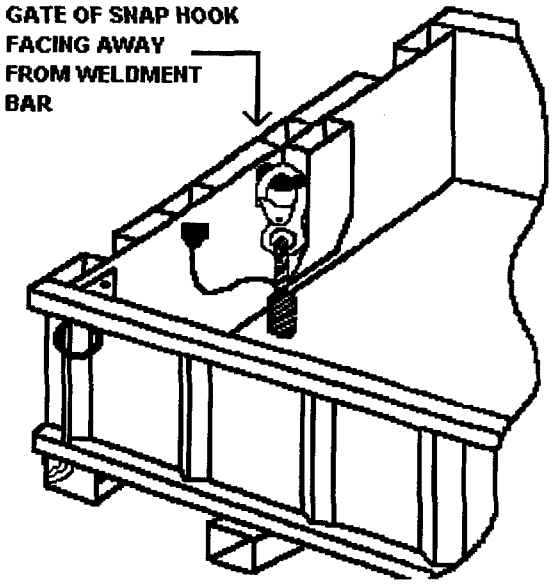

CHECK ARRESTING CABLE SNAP HOOK

Step 9: Do not pull on snap hook end of arresting cable. Fuze must be completely secured in container fuze holder.

Step 10: Excess arresting cable is placed so that it is hanging down front of container (Junction box end).

Step 11: Fuzing sequence complete.

Chart I.10 Rocket Motor Installation

Step 1: Do not handle rocket motor by bridle cables. Do not pull on rocket motor electrical connector. Carefully remove duct tape from rocket motor components.

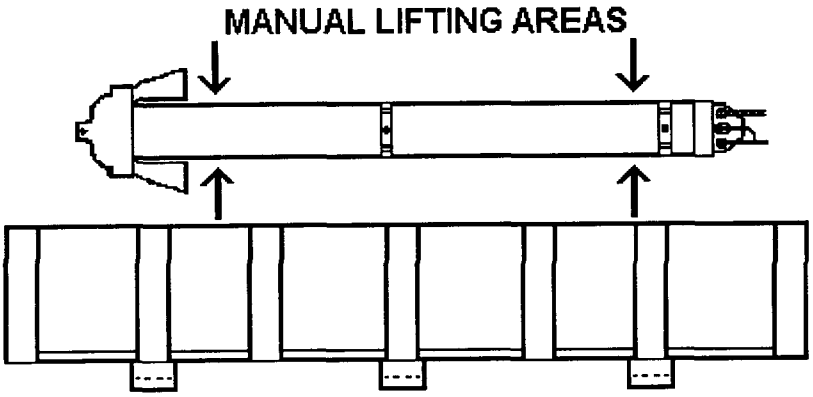

Step 2: Rocket motor assembling requires at least three personnel. Ensure launch rail and rocket motor are level with each other while assembling rocket motor.

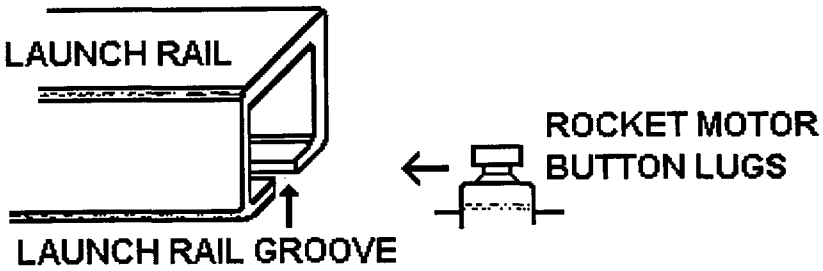

Step 3: Lift and hold forward alignment pins until rear button lug clear. Push rocket motor with enough rearward force to ensure rocket locks into release mechanism. Ensure forward and aft alignment pins are secure in rocket motor button lug bands.

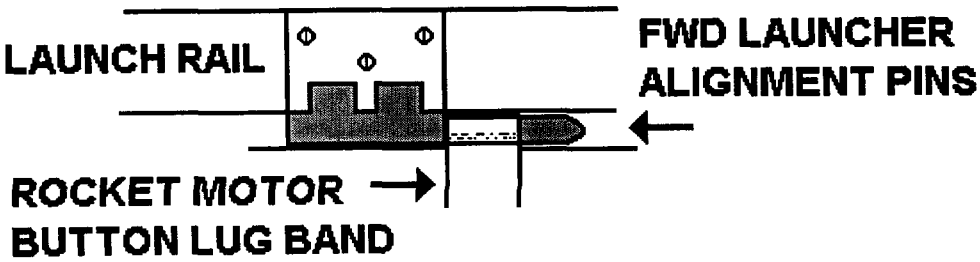

Chart I.10 Rocket Motor Installation (Cont)

Step 4: Ensure all (4) hand knobs are tightened on rocket motor bands. Electrical ties should be utilized to secure in position.

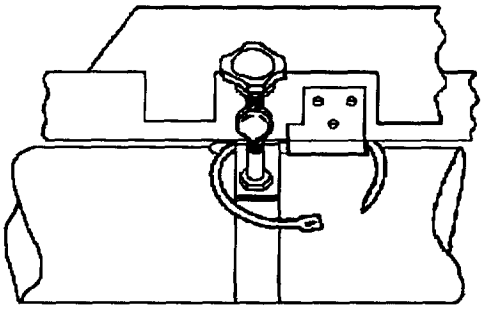

Step 5: 18-24" loop consists of 18-24". Cable from rocket motor to cable sheath. Strung sheaths will require electrical tape to hold cable in sheaths. Fold excess cable in a neat "S" shape on top of charge. Electrical tape may be used to tape cables together.

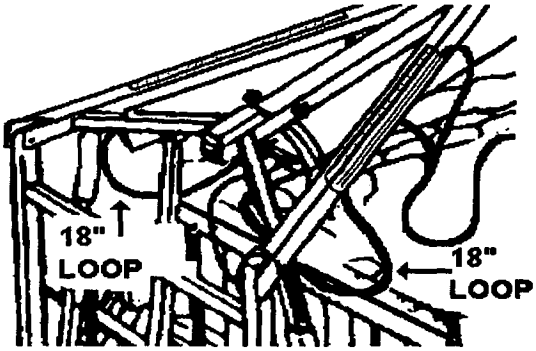

Step 6: Connect rocket motor lanyard to charge rocket motor harness connector.

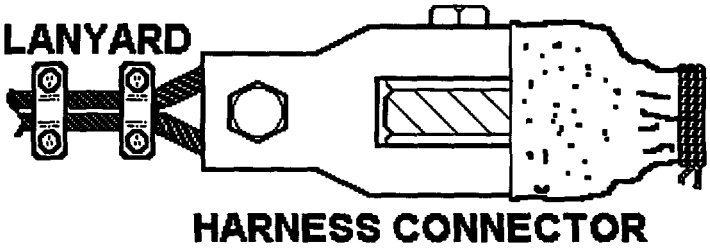

Step 7: Rocket motor installation complete.

THIS PAGE INTENTIONALLY LEFT BLANK

Chart I.11 Remote Raise Rail

Step 1: Connect lanyard to hydraulic valve and route to vehicle utilizing welded hoops on launcher.

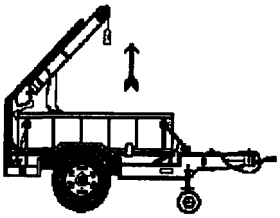

Step 2: Pressurize accumulator.

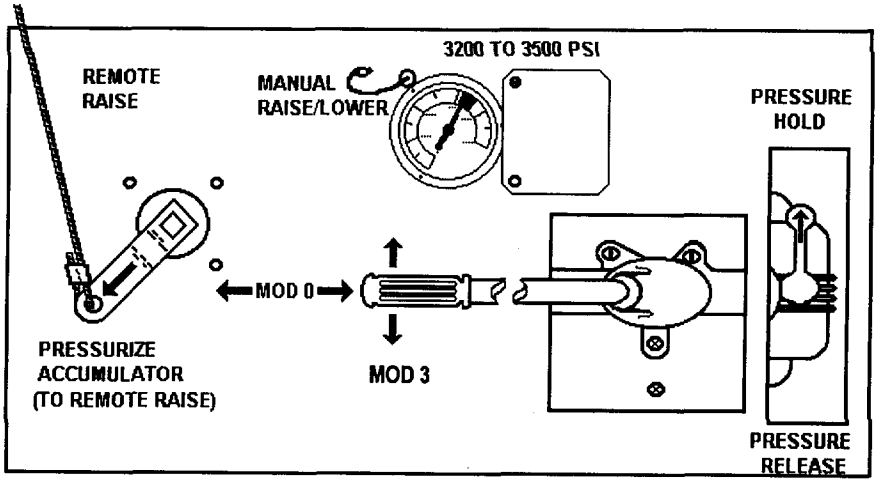

Step 3: Ensure detent engaged and ball lock pin in RAISE position.

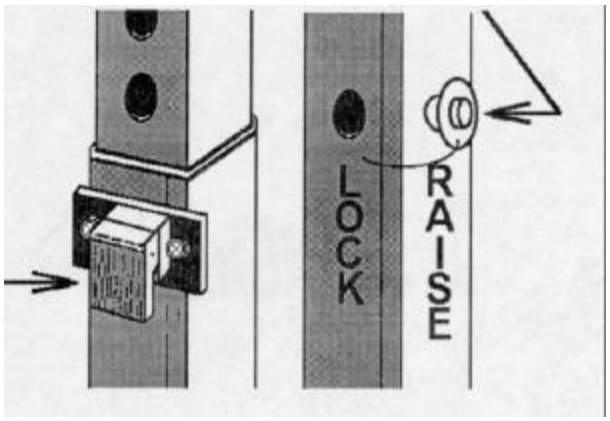

Step 4: Pulling on handle of lanyard will move hydraulic valve lever to REMOTE RAISE position, launcher will raise to approximately 45-47 degrees.

Chart I.12 Vehicle Speeds and Deployment

Step 1: Rocket motor secured with electrical ties, bungee straps and rocket motor packing. Dust cover over charge and extra rocket motor cable secure under cover.

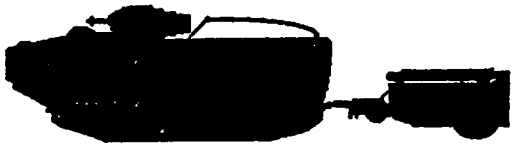

0 - 5 MPH ROUGH BROKEN TERRAIN
0 - 10 MPH FLAT ROUGH TERRAIN
0 - 15 MPH SMOOTH OFF ROAD
0 - 25 MPH SECONDARY ROADS

Step 2: Perform pre-deployment check to ensure dust cover opened, cables and fuze in proper position. Ensure quick release pin (MOD 4) or retainer screw (MOD 3) has been inserted in rocket motor.

Step 3: Visually check rocket motor to ensure that it is at a safe launch position (45-47 degrees). "ROCKET IN LAUNCH POSITION."

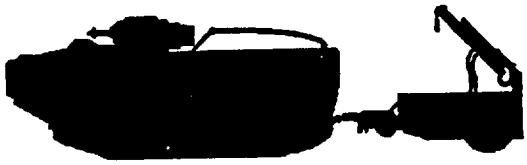

Step 4: "SWITCHING TO ROCKET" "STAND BY" "ROCKET FIRED".

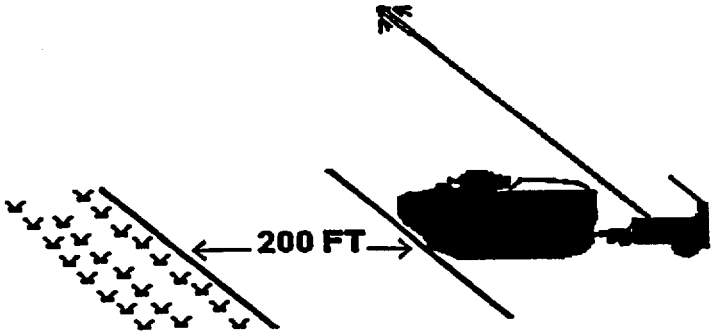

Chart I.13 Deployment of Charge

Step 5: "SWITCHING TO CHARGE" "STAND BY".

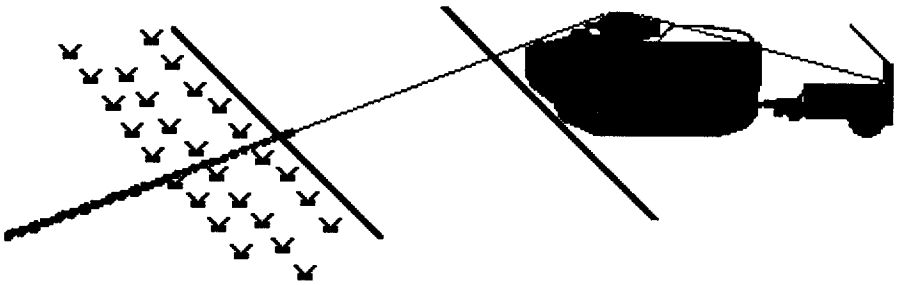

Step 6: "FIRE".

Step 7: "ALL CLEAR".

Chart I.14 Safety

- NO SMOKING WITHIN 200 FEET
- NO RADIO TRANSMISSIONS WITHIN 5 FEET OF CHARGE OR ROCKET MOTOR
- ROCKET MOTORS DROPPED ABOVE 2 FEET WILL NOT BE USED
- MISFIRE PROCEDURES: DISCONNECT POWER, CHECK CONNECTIONS, ATTEMPT TO RE-FIRE, NO-GO, DISCONNECT POWER, CONDUCT CIRCUIT CHECK TO CORRECT OR ISOLATE PROBLEM, ATTEMPT RE-FIRING, NO-GO, DISCONNECT, CALL EOD.
- DO NOT ATTEMPT TO EXTINGUISH OR MOVE A BURNING LINE CHARGE. BURNING LINE CHARGES CAN DETONATE. EVACUATE PERSONNEL TO A SAFE DISTANCE UNTIL CHARGE HAS COMPLETELY BURNED OUT. TRAILERS/LAUNCHERS CONTAINING A BURNING LINE CHARGE SHOULD BE DISCONNECTED IN PLACE BY THE QUICK DISCONNECT. VEHICLES UNABLE TO DISCONNECT WILL BE EVACUATED IN PLACE.
- MISFIRED LINE CHARGES WILL BE BLOWN IN PLACE BY QUALIFIED PERSONNEL UTILIZING EOD PROCEDURES.

Chart I.14 Safety (Cont)

A Rocket considered a projectile.

B Blast missile effect of detonation of line charge, 1000 yds.

C Spectators (no cover) should be 1,000 yds. To rear of trailer.

D Blast missile effect of bursting rocket motor, 400 yds.

E Effect of rocket backblast at launch point, 20 yds.

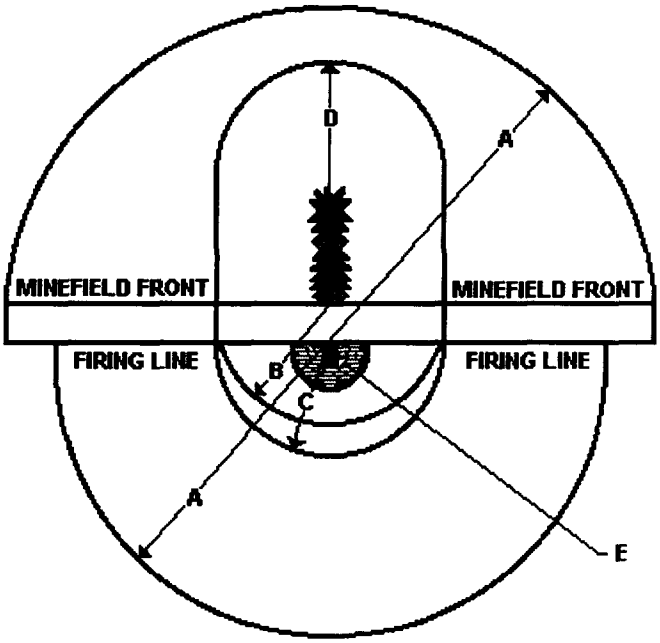

THIS PAGE INTENTIONALLY LEFT BLANK

APPENDIX J
INSTRUCTIONS FOR CONVERTING THE ARMORED VEHICLE LAUNCHED BRIDGE (AVLB) TO THE ARMORED VEHICLE LAUNCHED MINE CLEARING LINE CHARGE (AVLM)

J.1 PREPARATION

CAUTION

TO PREVENT TRACK FROM BEING THROWN, TRACK TENSION MUST BE CHECKED AND ADJUSTED IF VEHICLE IS TO BE OPERATED EXTENSIVELY WITHOUT BRIDGE. CONSULT TM 5-5420-226-10 (M48A5) OR TM 5-5420-202-10 (M60A1) FOR THESE PROCEDURES.

NOTE

- **THE FOLLOWING PROCEDURES DESCRIBE MOUNTING THE FABRICATED HARDWARE ONTO THE LEFT SIDE OF THE AVLB. PROCEDURES FOR MOUNTING THE FABRICATED HARDWARE ON THE RIGHT SIDE OF THE AVLB FOLLOW THE SAME INSTRUCTIONS.**
- **THE FOLLOWING PROCEDURES DESCRIBE MOUNTING THE MICLIC LAUNCHER ON THE RIGHT SIDE OF THE AVLB. PROCEDURES FOR MOUNTING THE MICLIC ON THE LEFT SIDE OF THE AVLB FOLLOW THE SAME INSTRUCTIONS.**
- **MOUNTING THE FABRICATED HARDWARE TO THE AVLB WILL BE A PERMANENT ATTACHMENT TO BE REMOVED ONLY FOR THE PURPOSE OF PERFORMING MAINTENANCE UNDER THE DECK.**
- **A MINIMUM OF THREE PERSONNEL ARE REQUIRED TO MOUNT THE FABRICATED HARDWARE AND MICLIC TO THE AVLB.**
- **Equipment Conditions**
  - **Bridge removed (TM 5-5420-226-10 or TM 5-5420-202-10)**
  - **Bridge seat pads removed and placed into storage**
  - **6 rear deck bolts and lock washers removed and retained for mounting the C-channels**

J.1.1 Conduct a complete inventory of the mounting hardware.

a. The following parts are to be fabricated per Appendix G:

(1) I-beam, 8 in. (20 cm) high x 10 ft (3 m) long (1 each)

(2) C-channel, 6 in. (15 cm) high x 1 ft (0.3 m) long (2 each)

(3) Steel plate, 2 in. (5 cm) x 3/4-in. (1.91 cm) x 7.5 in. (19.1 cm) long (4 each)

(4) Round U-bolt, 3/4-in. (1.91 cm) diameter x 5.125 in. (13.018 cm) x 13 in. (33 cm)(4 each)

b. The following parts are to be requisitioned:

(1) Self-locking hex nut, 3/4-10 UNC, NSN 5310-00-499-3333 (12 each)

(2) Hex bolt, 3/4-10 UNC x 3.0 Grade 8, NSN 5305-00-947-4354 (4 each)

(3) Load binder, NSN 3990-00-171-9775 (4 each)

(4) Chain, 14 ft (4.27 m) long, NSN 4010-00-171-4426 (4 each)

(5) Beveled washer, 1 in. (2.54 cm) diameter hole, NSN 5310-01-284-6395 (6 each)

(6) Beveled washer, 3/4-in. (1.91 cm) diameter hole, NSN 5310-01-317-0480 (8 each)

(7) Beveled washer, 5/8-in. (1.59 cm) diameter hole, NSN 5310-01-373-6951 (8 each)

(8) Tape, adhesive, green, NSN 7510-00-074-5124

c. The following parts are provided with **EACH** launcher:

(1) Squared U-bolt, 5/8-in. (1.59 cm) diameter x 3 in. (8 cm) x 4 in. (10 cm), NSN 5306-01-226-8720 (Appendix E)(2 each)

(2) Lock washer, 5/8-in. (1.59 cm) diameter hole, NSN 5310-00-937-0453 (Appendix E)(4 each)

(3) Hex nut, 5/8-11 UNC, NSN 5310-00-764-6609 (Appendix E)(4 each)

NOTE

RECOMMENDED TORQUE 3/4-10 UNC X 3 GRADE 8, 250 FT LBS MINIMUM AND 3/4-10 UNC U-BOLT, 90+20 FT LBS.

J.2 INSTALLING FABRICATED HARDWARE ONTO AVLB

NOTE

- **DURING INSTALLATION OF HARDWARE, HAND TIGHTEN ALL NUTS AND BOLTS UNTIL INSTRUCTED TO SECURE.**
- **THE THINNER EDGE OF THE BEVELED WASHER FACES TOWARD THE OUTSIDE OF THE VEHICLE.**

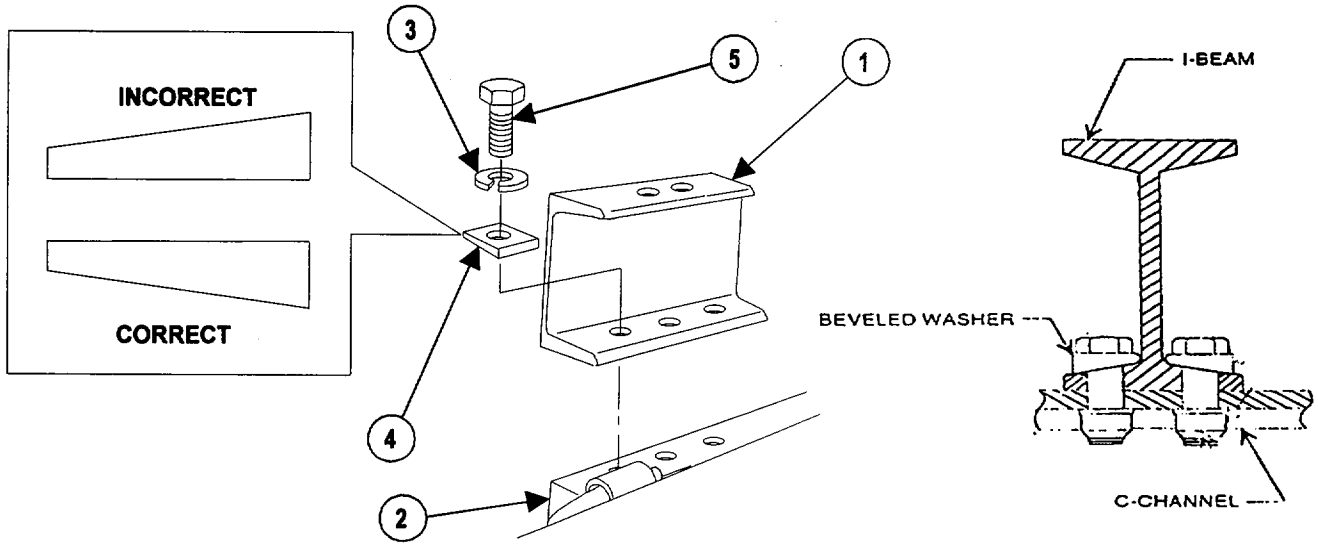

Figure J.1. Installing Fabricated Hardware onto AVLB

a. Position C-channel (1) on rear deck (2) with open sides facing inward. Align three holes of C-channel with three holes of rear deck. Install a lock washer (3) and a beveled washer (4) onto each rear deck bolt (5). Install three rear deck bolts. Hand tighten rear deck bolts.

b. Repeat step a on opposite side of vehicle.

WARNING

DO NOT UNSLING I-BEAM UNTIL IT IS SECURED TO C-CHANNELS.

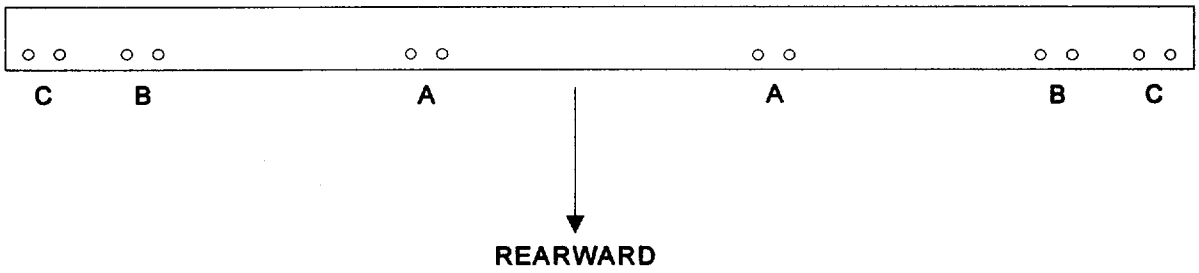

Figure J.2. I-Beam

NOTE

THE I-BEAM WILL BE POSITIONED ON THE C-CHANNELS WITH THE 12 HOLES FACING UP AND REARWARD.

c. Mounting I-beam:

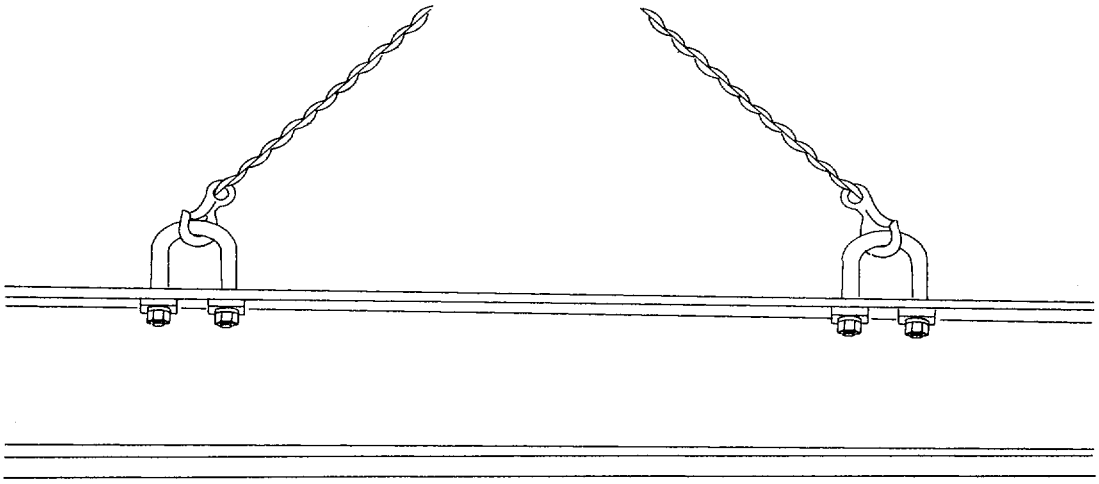

Figure J.3. Lifting I-Beam

(1) Lift I-beam by installing two squared U-bolts through the "A" holes and secure using hex nuts.

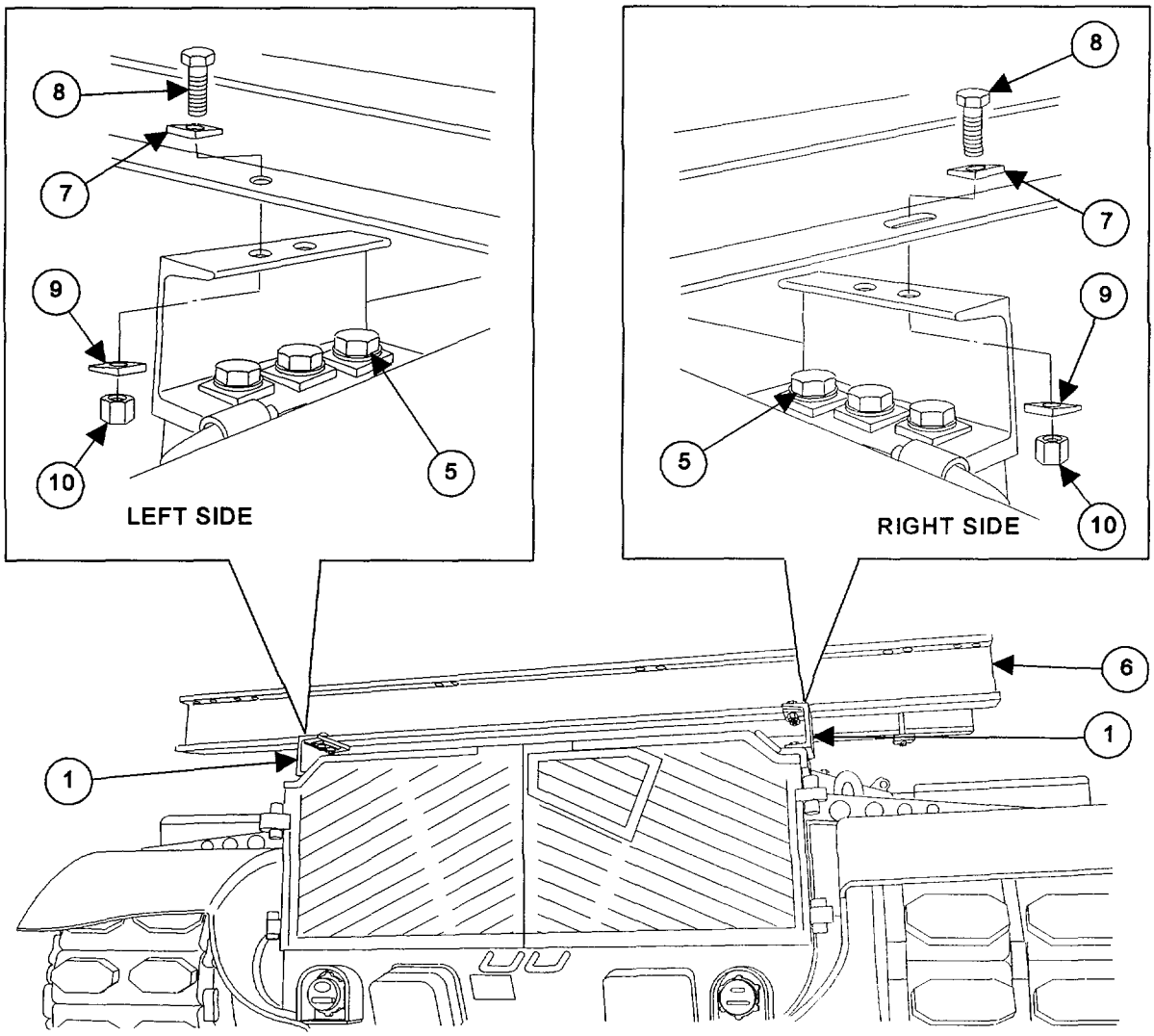

Figure J.4. Mounting I-Beam

(2) Raise and position I-beam (6) on top of two C-channels (1).

(3) Align holes of left side of I-beam with left C-channel.

(4) Install two beveled washers (7) onto two hex bolts (8) and install bolts through I-beam and C-channel. Position beveled washers with thin edge facing toward center of I-beam.

(5) Install two beveled washers (9), with the thinner edge of the beveled washers toward the outside of the vehicle, and two self-locking hex nuts (10) to bolts.

(6) Hand-tighten only.

d. Repeat hardware installation for right side.

e. Unsling I-beam (6).

f. Torque rear deck bolts (5) to 300 + 25 ft-lb (407 + 34 N-m).

g. Tighten four self-locking hex nuts (10).

J.3 PMCS AND PRESSURE CHECKOUT, PRIOR TO LOADING

a. Perform PMCS (para 2.2, Before Operation interval). Exclude trailer disconnect device.

b. Perform pressure check (para 2.6.1).

J.4 INSTALLING MICLIC LAUNCHER TO AVLB

WARNING

ALL HATCHES MUST BE CLOSED WHEN MOUNTING MICLIC ONTO AVLB.

Figure J.5. Mounting Launchers to I-Beam

NOTE

WHEN MOUNTING LAUNCHERS TO I-BEAM, ALL FRAMES ALIGN ON THE "A" HOLES. MOD 2 WILL ALIGN ON HOLES "A" AND "C". MOD 1 AND MOD 3 WILL ALIGN ON HOLES "A" AND "B".

a. Attach lifting sling (1)(Figure J.6) to handling/lifting equipment and MICLIC lifting rings (2). Lift and place launcher (3) onto bridge seat and I-beam with center crossmember (4) on bridge seat.

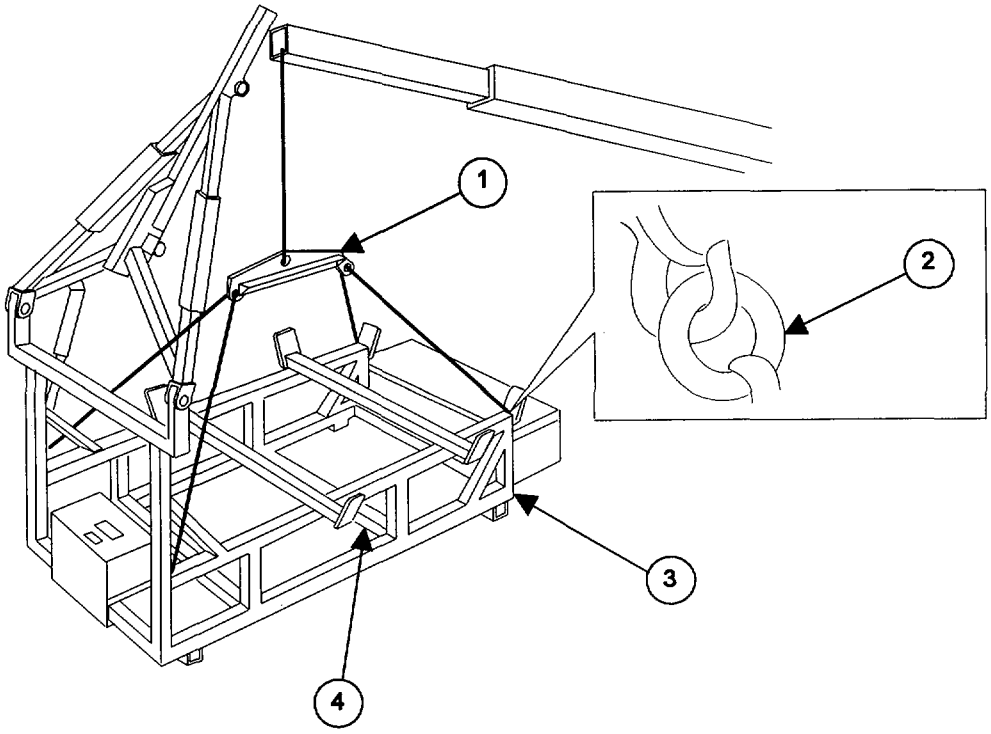

Figure J.6. Attach Lifting Sling to Handling/Lifting Equipment

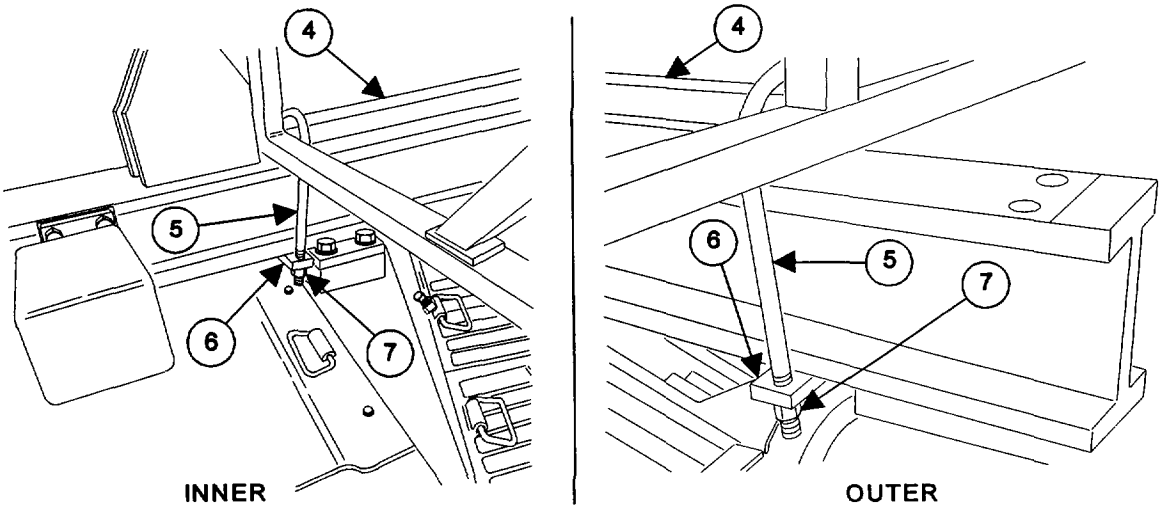

Figure J.7. Secure the Center Crossmember of Launcher to Bridge Seat

CAUTION

TO PREVENT DAMAGE TO LAUNCHER FRAME, DO NOT OVERTIGHTEN U-BOLT NUTS.

NOTE

THE ROUND U-BOLTS TOWARD THE CENTER OF VEHICLE MOUNT AT A SLIGHT ANGLE.

b. Secure the center crossmember (4)(Figure J.7) of launcher to bridge seat using two round U-bolts (5), two plates (6), and four self-locking hex nuts (7). Alternate tightening to ensure proper seating of U-bolts.

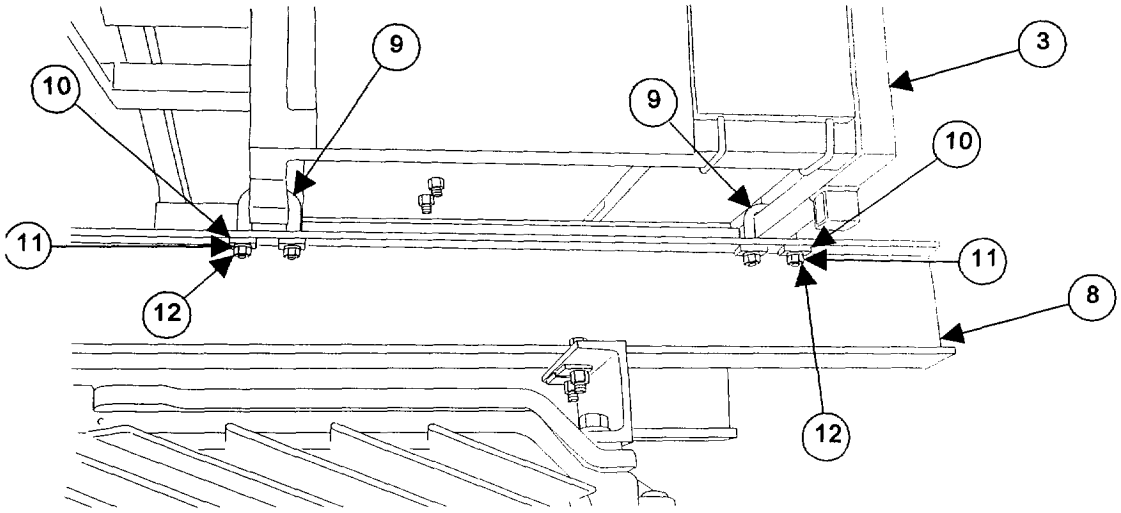

Figure J.8. Secure Rear of Launcher

CAUTION

TO PREVENT DAMAGE TO LAUNCHER FRAME, DO NOT OVERTIGHTEN U-BOLT NUTS.

c. Secure rear of launcher (3)(Figure J.8) to I-beam (8) with two squared U-bolts (9), four beveled washers (10), four lock washers (11), and four hex nuts (12). Tighten hex nuts evenly.

d. Tighten self-locking hex nuts (7) on round U-bolts (5). Alternate tightening to ensure proper seating of U-bolts.

e. Mount second launcher.

J.5 ROUTING OF ELECTRICAL CABLES

NOTE

THESE PROCEDURES DEVIATE FROM INSTRUCTIONS FOR TRAILER MOUNTING DUE TO PHYSICAL RESTRICTIONS ENCOUNTERED WHEN EMPLACING TWO LAUNCHERS SIDE BY SIDE.

a. MOD 2 and MOD 3 follow the procedures identified in paragraph 2.7.13, along with the following additional procedures:

NOTE

THE MOUNTING BRACKET OF THE W5 CABLE FACES FORWARD WHEN INSTALLED ONTO LAUNCHER.

(1) Route W5 cable assembly through holders (wire pigtails) located on the left side of launcher.

(2) Connect W5 cable, excluding trailer disconnect device instructions. The W5P2 connector is not used in this application. Tape W5P2 connector to body of W5 cable.

(3) Route W5 cable through TC's night vision periscope door in hatch and connect it to selector switch assembly.

(4) Connect W6 power cable to front of selector switch assembly.

(5) Take up slack of cables and tie together using nylon ties or tape. Secure bundled cable to lifting eye located between driver and TC hatches.

(6) After both cables are routed through TC door in hatch, tape door closed.

J.6 LOADING LINEAR DEMOLITION CHARGE CONTAINER ONTO LAUNCHER. INSTALLATION OF FUZE ONTO LINE CHARGE

a. Install fuze assembly prior to loading linear charge container onto launcher.

b. Perform preparatory procedures (para 2.7.2).

NOTE

WHEN LOADING LINEAR DEMOLITION CHARGE CONTAINER, ENSURE THAT ARROW ON CONTAINER IS FACING FORWARD.

c. Lift linear demolition charge container onto launcher (para 2.7.2). Note warnings.

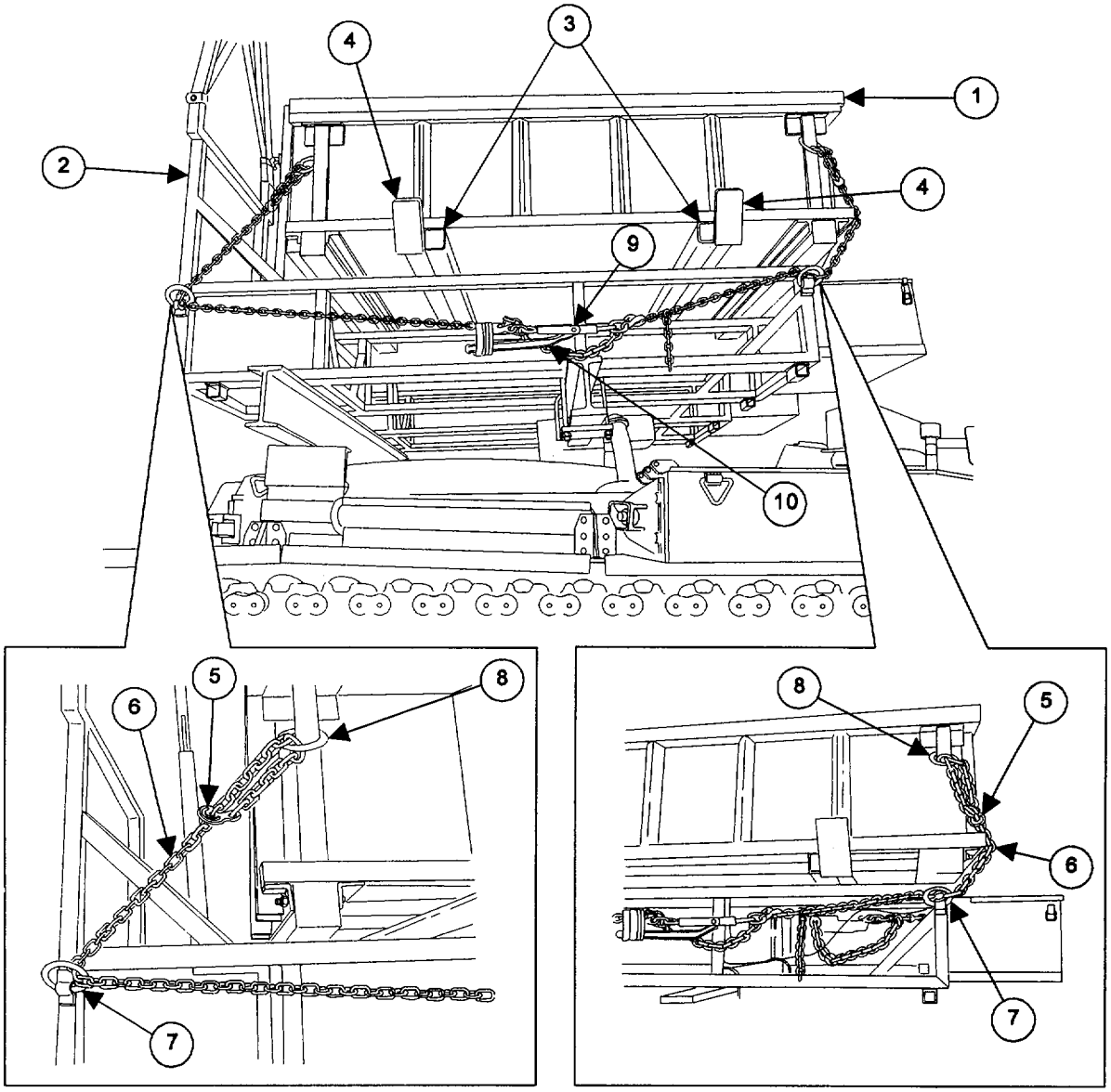

Figure J.9. Positioning Linear Charge Onto Launcher

d. When positioning linear charge (1)(Figure J.9) onto launcher (2), guide bars (3) on the bottom of linear charge should rest between the crossmembers (4) of launcher.

e. Secure linear charge (1) to launcher (2) using chains and binders provided. Route hook (5) and chain (6) through launcher tiedown (7) and up to linear charge. Pull hook and chain through linear charge tiedown (8) and attach hook to chain approximately 6 to 8 in. (15 to 20 cm) from linear charge tiedown. The chain should run under the charge container.

WARNING

CHAIN BINDERS MAY SPRING BACK WHEN TIGHTENING.

CAUTION

DO NOT USE AN ALUMINUM POLE AS A CHEATER BAR.

NOTE

CHAIN BINDER HANDLES MUST FACE REARWARD WHEN CLOSED.

f. Attach binder (9) near front of launcher (2) so that binder handle (10) is pulled rearward when locked. Secure binder handle to chain with tape.

g. Repeat steps d and e on other side of linear charge.

h. Repeat process when uploading a second linear charge.

J.7 INSTALLATION AND CHECKING OF ROCKET

NOTE

PULL DETENTS AND LOWER RAIL PRIOR TO INSTALLING ROCKET.

a. For installation and checking of rocket, refer to paragraphs 2.7.5 and 2.7.6. Repeat process when uploading a second rocket.

J.8 ELECTRICAL CONNECTIONS AND CONTINUITY CHECK

a. Connect W6 power cable to slave receptacle.

b. To check electrical connections on MOD 2 and MOD 3, refer to paragraph 2.7.13.

J.9 PREPARATION FOR DEPLOYMENT

a. To prepare MOD 2 and MOD 3 for deployment, refer to paragraph 2.7.16.

J.10 OPERATING PROCEDURES

WARNING

WEAR HEARING PROTECTION AND ENSURE ALL CREW HATCHES ARE CLOSED AND VEHICLE EXHAUST FANS ARE OFF BEFORE LAUNCHING MICLIC. FAILURE TO DO SO MAY RESULT IN INJURY OR DEATH TO PERSONNEL FROM ROCKET FUMES AND HAZARDOUS NOISE.

a. To prepare MOD 2 and MOD 3 for firing, refer to paragraph 2.8.

J.11 REMOVAL OF LINEAR DEMOLITION CHARGE CONTAINER AND RELOAD PROCEDURES

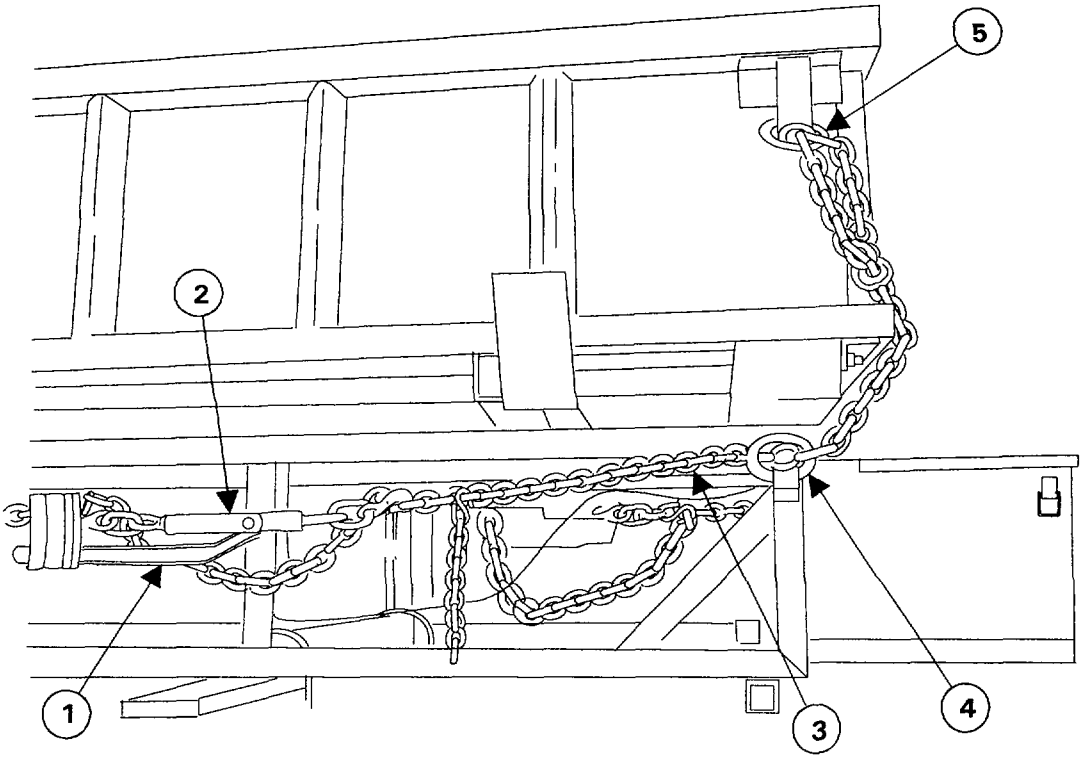

Figure J.10. Removal of Linear Demolition Charge Container and Reload Procedures

a. Remove tape from binder handle (1).

b. Open binder (2) and disconnect it from chain (3).

NOTE

CHAIN (3) DOES NOT NEED TO BE REMOVED FROM LAUNCHER TIEDOWN (4).

c. Unhook and remove chain (3) from linear charge tiedown (5).

d. Raise launcher rail and reload line charge in accordance with paragraph J.6.

J.12 REMOVAL OF LAUNCHERS AND FABRICATED HARDWARE

WARNING

USE LIFTING SLING WHEN REMOVING LAUNCHER AND I-BEAM.

NOTE

- **DISCARD USED SELF-LOCKING NUTS.**
- **IN ORDER TO PERFORM MAINTENANCE TO POWER PACK, THE I-BEAM MUST BE REMOVED.**

a. Launcher:

(1) Remove four hex nuts, four lock washers, four beveled washers, and two squared U-bolts from rear of launcher.

(2) Remove four self-locking hex nuts, two plates, and two round U-bolts from front of launcher. Remove launcher using sling assembly.

b. I-beam:

(1) Secure squared U-bolts to the "A" holes and connect sling to I-beam.

(2) Remove four self-locking nuts, four beveled washers, four hex bolts, and four beveled washers.

(3) Remove I-beam from vehicle.

c. C-channel:

(1) Remove three rear deck bolts, three lock washers, and three beveled washers.

(2) Repeat for other C-channel.

THIS PAGE INTENTIONALLY LEFT BLANK

APPENDIX K
POLYURETHANE CHEMICAL AGENT RESISTANT COATING

K.1 INTRODUCTION

a. This appendix provides basic information necessary for field organizations to mix and apply polyurethane Chemical Agent Resistant Coating (CARC) on weapon system components and containers. In addition, this appendix provided basic safety and equipment requirements that are necessary when using CARC. For more detailed information, refer to TM 43-0139, Painting Instructions for Field Use, TB MED 514, Occupational and Environmental Heath Requirements for Painting Operations, and AR 40-5, Preventive Medicine, Section III, Chapter 5 and Material Safety Data Sheets.

b. CARC can be applied directly over thoroughly cleaned existing alkyd or CARC painted surfaces provided the surface coating is sound, thoroughly cured, and no corrosion exists. CARC cannot be applied over lacquer. It must be stripped first.

c. There are two military specifications for CARC paint:

(1) MIL-C-46168. The current version of this two component (A&B) specification contains three types:

(a) Type II. A Lead-free and Chromate-free formulation.

(b) Type III. A Lead-free and Chromate-free formulation which uses 1, 1, 1-trichloroethane as a solvent. It meets current Volatile Organic Compound (VOC) emission requirements.

(c) Type IV. A high-solids VOC compliant formula.

(2) MIL-C-53039. A one-component CARC with the same performance characteristics of MIL-C-46168. It meets current VOC emissions requirements and is Lead-free and Chromate-free.

d. There are two types of epoxy primers recommended for use with CARC, each with its own military specification.

(1) MIL-P-53022. This two-part primer is Lead-free and Chromate-free, rust inhibiting, and can be applied to ferrous and non-ferrous surfaces.

(2) MIL-P-53030. This VOC compliant two-part primer was developed to meet the strict emission requirements of certain states. It is water reducible, Lead-free and Chromate-free, and can be applied to ferrous or non-ferrous surfaces.

e. The different paints and primers require several different thinners.

(1) MIL-T-81772. This thinner is used with CARC top coats and primers. It has the following types:

(a) Type I is used to thin:

1) MIL-C-46168, Types II and IV.
2) MIL-C-53039 (in areas not requiring VOC compliance).
3) MIL-P-53022 (when Type II is not available).

(b) Type II is used to thin MIL-P-53022.

(2) Water is used to thin MIL-P-53030.

(3) 1,1,1-trichloroethane (DOW Chlorothen SM or equivalent) is used to thin:

(a) MIL-C-46168, Type III.

(b) MIL-C-53039 (in areas requiring VOC compliance).

K.2 APPLICATION

NOTE

FOR TOUCHING-UP CARC PAINT, THERE ARE THREE SIZES OF AUTHORIZED PAINT BRUSHES. REFER TO APPENDIX E FOR DETAILS.

a. The presence of contaminants such as lead/chromate pigments, solvents (e.g. cellosolve acetate) and other chemicals (e.g. hexamethylene diisocyanate -HDI) in CARC requires fire and safety precautions be taken. The precautions for CARC are not substantially different than those now required for alkyd paint.

b. TB MED 514 and AR 40-5 contain detailed information.

c. Primer Mixing and Application.

NOTE

- **UPON OPENING CAN, ENSURE THAT THE CATALYST (COMPONENT-B) IS CLEAR. THICKNESS OR GELLING, WITH THE PRESENCE OF CRYSTALS, INDICATES THAT THE CATALYST IS NOT USABLE. BECAUSE OF THE HIGH SOLIDS CONTENT, THE EPOXY RESIN (COMPONENT A) MUST BE CHECKED FOR SETTLING. STIRRING SHOULD BE SUFFICIENT TO RE-SUSPEND THE SOLIDS.**

- **BEFORE APPLYING, EPOXY PRIMERS REQUIRE A 30-MINUTE WAITING PERIOD AFTER MIXING THE TWO COMPONENTS. TWO COMPONENT SPRAY EQUIPMENT CANNOT BE USED FOR THIS APPLICATION.**

d. CARC Paint Mixing and Application.

NOTE

- **PIGMENTS OF CARC COMPONENT-A HAVE A TENDENCY TO SETTLE AND CAKE DUE TO THE HIGH SOLIDS CONTENT. THESE SOLIDS MUST BE DISPERSED INTO A SMOOTH HOMOGENEOUS SOLUTION PRIOR TO THE ADDITION OF CATALYST. FAILURE TO RE-SUSPEND THE SOLIDS COULD AFFECT THE INFRARED AND COLOR MATCHING CHARACTERISTICS. RESOLUTION CAN BE ACCOMPLISHED IN THREE WAYS:**

- **SMALL QUANTITIES OF COMPONENT-A CAN BE AGITATED ON A MECHANICAL SHAKER FOR 30-60 MINUTES.**

- **LARGE DRUMS CAN BE ROLLED FOR 1 TO 6 HOURS.**

- **LARGE QUANTITIES CAN BE MECHANICALLY STIRRED FOR 1 TO 6 HOURS.**

- **BOTH COMPONENTS OF MIL-C-46168 AND PRIMERS SHOULD ALWAYS BE CAREFULLY MEASURED BECAUSE ACCURACY IS VERY IMPORTANT. MIXED TWO-COMPONENT CARC MUST BE USED WITHIN 8 HOURS AND CANNOT BE STORED.**

- **DO NOT MIX CARC MIL-C-46168 WITH CARC MIL-C-53039. THEY ARE NOT COMPATIBLE.**

- **IF COMPONENT-B CONTAINER OF MIL-C-46168 IS SWOLLEN, DO NOT OPEN IT. DISPOSE AS HAZARDOUS WASTE (AR 420-47).**

(1) CARC is applied to a minimum dry-film thickness of 0.0018 inches, normally in two coats.

(2) Additional spray costs may be applied immediately. Paint being applied by brush or roller must be dry-to-touch before a second coat is applied.

(3) Allow 3 hours air-dry time after application of final coat, prior to handling of item. During painting operations requiring handling of the item, each coat must be at least dry-to-touch.

(4) At ambient temperature of 70-75 degrees Fahrenheit (21-24°C) allow 4 hours air-dry time after application of final coat to the MK 155 Launcher, M353 and M200A1 trailers, and M58A4 and M68A2 line charge containers or the MK 2, MOD 0 Launcher System.

NOTE

COMPLETE CURE (THE COMPLETION OF THE CHEMICAL REACTION) WHICH PROVIDES MAXIMUM CHEMICAL AGENT PROTECTION, REQUIRES 7 TO 14 DAYS.

(5) Dry CARC is not toxic; however, during abrasion (sanding) of the CARC, adequate eye and respiratory protection must be used. The wet-sanding method reduces dust and the risk of inhalation.

e. Pretreatment

(1) If steel or aluminum is the base material, apply one coat of wash primer pretreatment (DOD-P-15328) followed by one coat of primer and two coats of CARC.

(2) If magnesium alloy is the base material, treat in accordance with MIL-M 3171, Type I or III followed by one coat of primer and two coats of CARC.

(3) If ablative surface is the base material, apply one coat of primer (MIL-P-23377) and two coats of CARC.

K.3 SAFETY

NOTE

PARAGRAPHS K-3a THROUGH K-3f APPLY WHEN MIXING AND PAINTING WITH CARC, AND WHEN PERFORMING CLEAN-UP OF EQUIPMENT AT THE CONCLUSION OF PAINTING OPERATIONS.

a. Safety procedures and respiratory protection devices for use in the application of CARC will apply for each type of facility, regardless of the installation at which located.

b. Respirators for use with CARC are either National Institute of Occupational Safety and Health (NIOSH) of Mine Safety and Health Administration (MSHA) approved, Type C positive pressure (or continuous flow), full face piece airline respirators or NIOSH-MSHA approved full-face chemical cartridge respirators with organic vapor cartridge or canisters. TB MED 502 "Occupational and Environmental Health Respiratory Protection Program, Feb 1982, Office of the Surgeon General," provides a listing of respiratory protective devices, their NIOSH/MSHA approval number, and criteria for use. Selection of respirators shall be made from this list.

NOTE

AIR LINE HOSES FOR USE WITH A SPECIFIC AIR DEVICE MUST BE SUPPLIED BY THE MANUFACTURER OF THAT DEVICE TO MAINTAIN VALIDITY OF NIOSH/MSHA APPROVAL; OTHERWISE APPROVAL WILL BE VOIDED. TB MED 502 ALSO LISTS RESPIRATORS AVAILABLE THROUGH THE FEDERAL SUPPLY SYSTEM BY NATIONAL STOCK NUMBER (NSN). TO DATE, NO RESPIRATORS WHICH WOULD FULFILL RESPIRATOR USE GUIDELINES FOR CARC POLYURETHANE COATING OPERATIONS ARE AVAILABLE THROUGH THE FEDERAL SUPPLY SYSTEM. THEREFORE, USE LOCAL PROCUREMENT CHANNELS.

c. In all instances, full protective clothing and impervious gloves must be worn when mixing and painting with CARC and when handling equipment used in CARC operations. Silicon rubber gloves are recommended for ease of cleaning. Protective clothing need not be chemical vapor proof, but must afford protection so that the CARC does not contact the skin. After use, protective equipment should be thoroughly cleaned, according to manufacturer's instructions.

d. Chemical cartridges or canisters shall be changed daily with appropriate replacement element and whenever break through (solvent odor) is detected by the wearer, or whenever breathing resistance is too great.

e. Except for conditions that require no protective respiratory device, no unprotected personnel shall be present while painting or cleaning operations are being performed, and no unprotected personnel shall enter the area until 30 minutes have elapsed after completion of painting/cleaning operations.

f. Outdoor spray painting will not be done if unprotected personnel are within a 50-foot radius of the painting operations. Downwind conditions should also be taken into consideration which may necessitate greater than the 50 foot radius minimum. The respiratory protection device required for a specific condition will be determined from Table H.1.

Table K.1. Respiratory Protection Equipment Requirements

Condition	None	Air Line Respirator	Full Face Chemical Cartridge
1. Spray painting indoors, walk-in booth or confined space.			
a. Excess Contaminants		X	
b. HDI below standard			X
c. Solvent concentration less than 10X standard.			X
d. Pigment with lead or chromate less than standard			X*
2. Spray painting, indoors, spray cabinet or conveyer booth:			
a. If all contaminant levels are below standards.	X		
b. HDI concentrations exceed standard.		X	
c. Solvent concentrations greater than standard but less than 10X standard			X
d. Pigment containing lead or chromate concentrations greater than standard, but less than 10X standard.			X*
3. Spray painting outdoors, confined space.		X	
4. Spray painting outdoors, open space.			X

*With HEPA Filters

Table K.1. Respiratory Protection Equipment Requirements (Cont)

Condition	None	Air Line Respirator	Full Face Chemical Cartridge
5. Brush/roller painting, indoors or outdoors:			
a. In a confined space.		X	
b. Open space using one quart or less.	X		
c. Open space using more than one quart.			X

g. To determine the correct equipment based on the conditions of Table K.1, the "standard" means the Occupational Safety and Health Administrations Permitted Exposure Limit, The American Conference of Governmental Industrial Hygienist (ACGIH) Threshold Limit Value or Office of the Surgeon General Policy, whichever is lowest.

WARNING

- **DO NOT SMOKE OR PERMIT ANY SOURCE OF IGNITION NEAR PAINTING OPERATION.**

- **MAINTAIN A CONTINUOUS ELECTRICAL GROUND ON ALL EQUIPMENT TO PREVENT STATIC BUILDUP WHICH COULD PRODUCE A SPARK AND IGNITE THE MATERIAL. APPROVED GROUNDING AND BONDING CONNECTIONS MUST BE USED.**

K.4 MEDICAL REQUIREMENTS

NOTE

PERSONNEL KNOWN TO BE SENSITIVE TO ISOCYANATES SHALL BE EXCLUDED FROM OPERATIONS INVOLVING APPLICATION OF CARC.

a. Individuals engaged in CARC painting operations will potentially be exposed to hexamethylene diisocyante (HDI) and a number of organic solvents. In some circumstances, they may also be exposed to pigments containing heavy metal. Repeated exposure to these substances may result in chronic, adverse, heath effects involving a number of organ systems. The recommendations for medical surveillance for medical individuals applying CARC have been tailored to components of this particular paint. It should be noted that medical surveillance for individuals applying other paints would also have to be tailored for those paints and could be similar or dissimilar to these recommendations depending on the makeup of the particular paint in question.

b. For Pre-placement and periodic job-related medical surveillance, refer to:

(1) TB MED 514 "Occupational and Environmental Health Requirements for Painting Operations" for detailed environmental and occupational health information and guidance.

(2) AR 40-5, Preventive Medicine, 1 June 1985, in Chapter 5 (Army Occupational Health Program), outlines requirements for provision of pre-placement and periodic job-related medical surveillance for Department of Army military and civilian personnel.

INDEX

Subject **Page**

A

AMMUNITION MAINTENANCE 6-1
Direct/General Support/Ammunition Supply Point M58A3/A4 6-3
Direct/General Support/Ammunition Supply Point M68A2 INERT 6-6
Direct/General Support/Ammunition Supply Point MK22 MOD 3/4 ..... 6-9, 6-10
Inspection 6-1
Operator/Unit Maintenance M58A3/A4 Linear Demolition Charge Insp 6-2
Operator/Unit Maintenance M68A2 Inert Linear Demolition Charge I 6-5
Operator/Unit Maintenance MK22 MOD 3 Rocket Motor Inspection 6-7
Operator/Unit Maintenance MK22 MOD 4 Rocket Motor Inspection 6-8
Repacking 6-2
Service Receipt of Materiel 6-1
Unpacking 6-2
ASSEMBLY AND PREPARATION FOR USE 2-32

B

BLEED HYDRAULIC SYSTEM 4-28
Prepare to Lower Rail 4-30
Prepare to Raise Rail 4-29
Raise and Lower MOD 2 and MOD 3 Rail 4-31

C

CARE OF EQUIPMENT IN ADMINISTRATIVE STORAGE 5-49
Exercising 5-50
Inspection 5-49
Maintenance Services 5-49
Rotation 5-50
CHARGING OF ACCUMULATOR 5-42
Charging the Accumulator 5-43
CLINOMETER 4-50
Replacement of Clinometer 4-50
COMMON TOOLS AND EQUIPMENT 4-1
CONTINUITY CHECK FOR MOD 0 AND MOD 1 LAUNCHERS 2-83
Check Circuits with Safety Switch Closed 2-85
Check Circuits with Safety Switch in Open Position 2-85
Prepare for Continuity, Circuit Test 2-83
CONTINUITY TEST TROUBLESHOOTING GUIDE MOD 0/1 3-8

INDEX (Cont)

Subject **Page**

D

DANGER ZONES FOR M58 AND M68 2-117
DEPLOYMENT FROM MOD 0/1 LAUNCHERS, FINAL PREPARATION 2-87
Final Preparation for Deployment 2-88
DIRECT SUPPORT/AMMUNITION SUPPLY POINT MAINTENANCE 6-20
Reapplying Markings to Linear Demolition Charge Container or ROC 6-22
Removing Corrosion From Linear Demolition Charge Container 6-20
Rocket Motor Packing Box Inspection and Reconditioning 6-25
DESTRUCTION OF ARMY MATERIEL 1-1
DESTRUCTION OF MARINE CORPS MATERIEL 1-1
DIFFERENCES BETWEEN MODELS 1-22

E

ELECTRICAL ASSEMBLIES TROUBLESHOOTING 4-11
Cable Assembly, W3. MOD 2/3 4-25
Cable Assembly, W5 MOD 2/3 4-23
Continuity Check of the Safety Switch Assembly 4-13
Continuity Check of the Selector Switch Assembly 4-15
M34 Blasting Machine 4-27
M51 Blasting Cap Test Set 4-27
MOD 0/1 Continuity Check of 76 Foot No. 3 Electrical Cable 4-20
MOD 2/3 W6 Cable Assembly 4-21
Selector Switch Assembly 4-17
ELECTRICAL CABLE MAINTENANCE 5-30
Electrical Cable No. 3, 75 Ft. Inspection 5-31
Electrical Cable No. 3, 75 Ft., Repair 5-31
Repair MOD 0/1 Selector Switch 5-31
ELECTRICAL CONNECTIONS AND CONTINUITY CHECK FOR (MOD 0/1) 2-78
Check operation of M51 Test Set and M34 Blasting Machine 2-79
Connect Electrical Cables to Linear Demolition Charge 2-81
ELECTRICAL SYSTEM 1-27
MOD 0/1 Electrical System 1-27
MOD 2/3 Electrical System 1-29
ELECTRICAL SYSTEM COMPONENTS 2-5
EQUIPMENT CHARACTERISTICS, CAPABILITIES, AND FEATURES 1-5
EQUIPMENT DATA 1-24
Launcher Hydraulic Assembly 1-24
Launcher MOD 0/MOD 1 1-24
Launcher MOD 2/MOD 3 1-24
Linear Demolition Charge 1-26
Linear Demolition Charge Container 1-26
Rocket Motor Old Box/New Box 1-26
Trailer Disconnect Device 1-26

INDEX (Cont)

Subject **Page**

F

FIRING MOD 0/1 LAUNCHER FROM AN ARMORED TOW VEHICLE 2-121
Detonate Linear Line Charge 2-124
Launch Rocket Motor 2-122
Linear Charge Misfire Procedures 2-124
Raise Rocket Motor 2-121
Secure Equipment 2-125
FIRING MOD 2/3 LAUNCHER FROM AN ARMORED TOW VEHICLE 2-132
Detonate Linear Charge 2-137
Launch Rocket Motor 2-134
Raise Rocket Motor. 2-134
Secure Equipment 2-138
FIRING MOD 2/3 LAUNCHER FROM OTHER THAN ARMORED TOW VEHICLE 2-139
Detonate Linear Charge 2-147
Prepare Launcher 2-142
Prepare the Trailer for Launching 2-141
Prepare to Launch Rocket Motor 2-144
Secure Equipment 2-147
FORMS, RECORDS, AND REPORTS 1-1

G

GENERAL COMMENTS ABOUT USE OF MICLC 2-25

H

HYDRAULIC ASSEMBLIES TROUBLESHOOTING 4-8
Launcher Rail Does Not Raise or Lower 4-8
HYDRAULIC SYSTEM 1-33
MOD 0/1 Hydraulic System 1-33
MOD 2/3 Hydraulic System 1-36
HYDRAULIC SYSTEM FOR COMPONENT REPLACEMENT 4-50
Installation of Hydraulic Components 4-54
Remove Hydraulic Components 4-51

I

INITIAL ADJUSTMENTS, CHECKS, AND SELF-TESTS 2-27
Detent Check 2-29
PRESSURE CHECK 2-27
Remote Raise of Rail Check 2-29
Return Launcher to Stow Configuration. 2-31
INSPECTION/CLEANING OF A DEPLOYED M68 INERT LINEAR DEMOLITION 3-15

INDEX (Cont)

Subject **Page**

I (Cont)

INSTALL FUZE 2-50
Prepare Linear Demolition Charge for Use 2-52
INSTALLATION OF LAUNCHER RAIL 4-34
INSTALLING LAUNCHER ON TRAILER 2-32
INTRODUCTION TO USE OF MICLIC 2-1

J

JUNCTION BOX CONTINUITY CHECK 6-27

L

LAUNCHER RAIL, SUPPORTS, AND LAUNCHER FRAME WELDMENT ASSEMBLY 2-8
LINEAR DEMOLITION CHARGE 1-32
LOCATION AND DESCRIPTION OF MAJOR COMPONENTS 1-5
Linear Demolition Charges 1-5
MK 155 Launcher MODS 0/1/2/3 1-13
Rockets Motors 1-11
Trailer Chasis 1-21
LOADING LINEAR DEMOLITION CHARGE CONTAINER ON LAUNCHER 2-38
Inspect Linear Demolition Charge 2-41
Prepare Launcher to Load the Linear Demolition Charge 2-39
LUBRICATION INSTRUCTIONS 3-1

M

M34 BLASTING MACHINE AND M51 BLASTING CAP TEST SET 2-7
MAINTENANCE PROCEDURES 3-14, 4-28
Repack M68A2 Inert Linear Demolition Charge 3-14
Servicing Electrical Connectors and Receptacles 3-14
MALFUNCTION TEST OR INSPECTION CORRECTIVE ACTION 4-8
Launcher Rail Raises or Lowers Haltingly 4-9
MALFUNCTIONS REPORT 2-152
MISFIRE PROCEDURES FOR LINEAR DEMOLITION CHARGE 2-150
Initiate Misfire Procedure 2-151
MISFIRE PROCEDURES FOR ROCKET MOTOR 2-148
Initiate Misfire Procedure 2-148
MISFIRE TROUBLESHOOTING. 2-152
MOD 2/3 CONTINUITY TEST TROUBLESHOOTING GUIDE 3-10
MOD 2/3 FINAL PREPARATION FOR DEPLOYMENT (Army Only) 2-112
Final Preparation for MOD 2 Deployment 2-112
MOD 2/3 Launchers Continuity Check (Army Only) 2-100
Attach Trailer to Towing Vehicle 2-109
Check Electrical Circuits with Rail at 0° (Safety Switch Open) 2-104

INDEX (Cont)

Subject **Page**

M (Cont)

Check Electrical Circuits with Safety Switch Closed 2-107
Check Operation of M51 Circuit Tester and M34 Blasting Machine 2-101
Connect Electrical Cable 2-102
Pressurize Accumulator to Remotely Raise Rail 2-104
Procedure to function the Remote Trailer Disconnect Device 2-108
MOD 2/3 LAUNCHERS ELECTRICAL CONNECTIONS (ARMY ONLY) 2-96
Branched cable assembly W5 2-96
Power Cable W6 2-100
Sixty-foot Cable W3 2-100
MOD 2/3 LAUNCHERS. INSTALLING REMOTE TRAILER REMOTE DISCONNECT 2-93
Fasten Remote Trailer Disconnect Device to Trailer Lunette 2-93
To Inverting Lunette, Perform the Following 2-95
MOD 2/3 LAUNCHERS REMOTE TRAILER QUICK DISCONNECT DEVICE 4-100
Disassembly 4-108
Installation 4-101
Reassembly 4-113
Removal 4-101

O

OPERATING MODE 0/1 LAUNCHER FROM OTHER THAN ARMORED
TOW VEHICLE 2-125
Detonate Linear Charge 2-131
Prepare Launcher 2-129
Prepare the Trailer for Launching 2-128
Prepare to Launch Rocket Motor 2-130
Secure Equipment 2-132
OPERATING PROCEDURES 2-116
OPERATION UNDER UNUSUAL CONDITIONS 2-170
Blowing Dirt and Sand 2-172
Crosswinds and Headwinds 2-170
Deployment During Extreme Cold Weather Conditions
(For Marine Corp Only) 2-171
Deployment During Extreme Hot Weather Conditions 2-172
Firing With M200A2/A3 or M353 Wheeled Trailer Detached From Tow 2-172
Nuclear, Biological, and Chemical (NBC) Environment 2-170
River Fording 2-170
Snow, Sleet, and Freezing Rain 2-171
Temperatures Below -25°F (-32°C) 2-171
Upgrades and Downgrades 2-170
Wooded Areas 2-170

INDEX (Cont)

Subject **Page**

O (Cont)

OPERATOR/UNIT MAINTENANCE 6-11
Removing Cadmium Powder Residue From Interior of Linear Demolition Charge 6-11
Removing Corrosion From Receptacles on Linear Demolition Charge 6-11
Removing Corrosion from Rocket Motor Button Lug Band(s) 6-13
Repacking of Field-Returned Linear Demolition Charge 6-16
Repacking of Field-Returned Rocket Motor 6-14

P

PMCS DEFINITIONS 2-10
Corrosion 2-10
Leaks 2-10
PMCS PROCEDURES 2-11
Ball-Lock Pins 2-14
Complete Launcher 2-22
Coupler (Trailer Disconnect Device)(Army Only) 2-17
Electrical Cables 2-23
Electrical System 2-23
Frame and Attaching Hardware 2-15
Hand Pump 2-20
Hydraulic Assembly 2-18
Hydraulic Control Valve 2-21
Hydraulic Cylinder 2-18
Hydraulic Pressure Gage 2-21
Hydraulic System 2-22
Launcher Joints 2-15
Launcher Rail 2-12
Launcher Rail Supports 2-13
M34 Blasting Machine 2-22
M51 Blasting Cap Test Set 2-22
Release Valve 2-21
Rocket Release Mechanism 2-16
Safety Switch 2-14
Selector Switch Box (MOD 0/1) or Selector Switch Assembly 2-23
Sling and Test 2-24
Support Equipment Stowed in Storage Container 2-15
PREFIRE CHECKING PROCEDURES 2-116
Mods 0/1 and 2/3 Prefire Checks 2-116

INDEX (Cont)

Subject **Page**

P (Cont)

PREPARATION FOR ADMINISTRATIVE STORAGE 5-46
Authorization and Readiness 5-46
Auxiliary Equipment and Basic Issue Items 5-47
Corrections of Shortcomings and Deficiencies 5-47
Definition of Administrative Storage 5-46
General Cleaning, Painting, and Preservation 5-48
Lubrication 5-47
M155 Launcher Packaging Process for Storage or Shipment 5-48
Maintenance Records 5-46
Maintenance Services and Inspection 5-47
Preparation for Storage 5-46
Security 5-46
Storage Plan 5-47
Storage Site 5-47
Trailer Packaging Process for Storage or Shipment 5-49
PREPARATION FOR STORAGE OR SHIPMENT 1-2
PREPARE LAUNCHER TO LOAD ONTO TRAILER 2-33
Lift Launcher onto Trailer and Secure Launcher to Trailer 2-35
PREVENTIVE MAINTENANCE CHECKS AND SERVICES (PMCS) 2-10

R

RECOVERING M68A2 (INERT) LINEAR CHARGE ONLY 2-155
Disconnect Electrical Cables and Secure Caps 2-155
Load and Transport Linear Charge 2-158
Remove Rocket Bridle Cable from Arresting Cable 2-158
Remove Training Fuze from M68 Linear Demolition Charge 2-156
REMOVAL FROM ADMINISTRATIVE STORAGE 5-50
Preparation of Equipment 5-50
Servicing 5-50
REMOVE NYLON COVER FROM CONTAINER AND INSTALL ON LINE CHARGE 2-59
REMOVING LAUNCHER FROM TRAILER 2-164
Lift Launcher from Trailer 2-167
Lower Launcher Rail 2-167
Raise Launcher Rail 2-165
Remove U-bolts from Launcher/Trailer 2-166
REMOVING LINEAR DEMOLITION CHARGE/INERT CONTAINER FROM LAUNCHER 2-159
Disconnect Electrical Cables and Secure Caps 2-159
Raise Launcher Rail 2-160
Secure Sling and Lower Rail 2-163
Unload Linear Charge Container 2-161

INDEX (Cont)

Subject **Page**

R (Cont)

REPACKING OF ARRESTING CABLE 3-16
Repacking Linear Charge 3-18
REPAIR HYDRAULIC CONTROL VALVE 5-39
REPAIR HYDRAULIC CYLINDER 5-33
Repair Hydraulic Cylinder 5-33
REPAIR HYDRAULIC HAND PUMP 5-46
Repair Hydraulic Hand Pump 5-36
REPAIR HYDRAULIC HOSE, LINES, AND FITTINGS 4-86
Inspect Hoses, Lines and Fittings for MOD 2 and MOD 3 Launchers 4-93
Inspect Hydraulic Hoses, Lines and Fittings for MOD 0 and MOD 1 4-88
Removal of Hydraulic Hoses, Lines and Fittings for MOD 0 and MOD 1 4-86
Remove Hoses, Lines and Fittings for MOD 2 and MOD 3 4-90
Replace Hoses, Lines and Fittings for MOD 2 and MOD 3 Launchers 4-93
Replace Hydraulic Hoses, Lines and Fittings for MOD 0 and MOD 1 4-89
REPAIR LAUNCHER RAIL AND SUPPORT AND LAUNCHER FRAME
WELDMENT ASSEMBLY 5-4
Inspect 5-5
Repair 5-5
REPAIR OR REPLACE HAND KNOB ASSEMBLY 4-42
Removal of Detent Assemblies 4-45
Removal of Hand Knob Assembly 4-43
Replace Detent Assembly 4-45
Replacement of Detent Assemblies 4-46
Replacement of Hand Knob Assembly 4-44
REPAIR/PAINTING LAUNCHER ASSEMBLY 5-1
Preparation/Painting 5-3
REPAIR PARTS, TOOLS; SPECIAL TOOLS; TEST, MEASUREMENT, AND DIAGN 4-1
REPAIR SELECTOR SWITCH ASSEMBLY FOR MOD 2 AND MOD 3 5-18
Replace Cable and Stuffing Tube 5-28
Replace Enclosure Assembly 5-18
Replace J1 Receptacle Connector 5-27
Replace J2 Receptacle Connector 5-26
Replace Lamp Assembly (DS1)(18) 5-24
Replace ON/OFF Toggle Switch (S1) 5-23
Replace Raise Rocket/OFF Toggle Switch (S3) 5-22
Replace RELEASE TRAILER/OFF Toggle Switch (S2) 5-24
Replace Reset Button (Circuit Breaker)(15)(CB1) 5-26
Replace ROCKET/SAFE/CHARGE Rotary Switch (S4) and Knob 5-21
REPLACE CABLE SHEATHS 4-40
Removal of Cable Sheaths 4-41
Replacement of Cable Sheaths 4-41
REPLACE DETENT ASSEMBLY 4-45

INDEX (Cont)

Subject **Page**

R (Cont)

REPLACE FLUID DAMPENER 4-82
Removal of Fluid Dampener for MOD 0 and MOD 1 Launchers 4-83
Removal of Fluid Dampener for MOD 2 and MOD 3 Launchers 4-84
Replacement of Fluid Dampener for MOD 0 and MOD 1 Launchers 4-84
Replacement of Fluid Dampener for MOD 2 and MOD 3 Launchers 4-85
REPLACE HAND PUMP 4-64
Removal of Hand Pump for MOD 0 and MOD 1 Launchers 4-65
Removal of Hand Pump for MOD 2 and MOD 3 Launchers 4-67
Replacement of Hand Pump for MOD 0 and MOD 2 Launchers 4-66
Replacement of Hand Pump for MOD 2 and MOD 3 Launchers 4-68
REPLACE HYDRAULIC ACCUMULATOR 4-59
Removal of Hydraulic Accumulator for MOD 0 and MOD 1 Launchers 4-61
Removal of Hydraulic Accumulator for MOD 2 and MOD 3 Launchers 4-62
Replacement of Hydraulic Accumulator for MOD 0 and MOD 1 Launchers 4-62
Replacement of Hydraulic Accumulator for MOD 2 and MOD 3 Launchers 4-63
REPLACE HYDRAULIC CHECK VALVE 4-80
Removal of Hydraulic Check Valve 4-81
Replacement of Hydraulic Check Valve 4-81
REPLACE HYDRAULIC CONTROL VALVE 4-70
Removal of Hydraulic Control Valve for MOD 0 and MOD 1 Launchers 4-71
Removal of Hydraulic Control Valve for MOD 2 AND MOD 3 Launchers 4-73
Replacement of Hydraulic Control Valve for MOD 0 and MOD 1 Launchers 4-72
Replacement of Hydraulic Control Valve for MOD 2 and MOD 3 Launchers 4-76
REPLACE HYDRAULIC CYLINDER 4-56
Installation of Hydraulic Cylinder 4-57
Remove Hydraulic Cylinder 4-57
REPLACE HYDRAULIC PRESSURE GAGE 4-77
Removal of Pressure Gage for MOD 0 and MOD 1 Launchers 4-77
Removal of Pressure Gage for MOD 2 and MOD 3 Launchers 4-79
Replacement of Pressure Gage for MOD 2 and MOD 3 Launchers 4-79
Replacement of Pressure Gage for MOD 0 and MOD 2 Launchers 4-78
REPLACE HYDRAULIC SOLENOID VALVE (MOD 2 AND MOD 3) 4-98
Removal of Hydraulic Solenoid Valve on MOD 2 or MOD 3 4-98
Replacement of Hydraulic Solenoid Valve on MOD 2 and MOD 3 4-100
REPLACE LANYARD 4-96
Remove Lanyard 4-96
Replace Lanyard 4-96
REPLACE LAUNCHER RAIL 4-31
Removal of Launcher Rail 4-32
REPLACE LAUNCHER RAIL SUPPORT 4-35
Removal of Launcher Rail Support 4-36
Replacement of Launcher Rail Supports 4-37

INDEX (Cont)

Subject **Page**

R (Cont)

REPLACE ROCKET RELEASE MECHANISM 4-47
Removal of Rocket Release Mechanism 4-47
Replacement of Rocket Release Mechanism 4-48
REPLACEMENT OF THE SAFETY SWITCH ASSEMBLY 5-10
REPORTING EQUIPMENT IMPROVEMENT RECOMMENDATIONS (EIR) 1-2
RESETTING LINEAR ACTUATOR IN TRAILER DISCONNECT DEVICE 2-149
ROCKET ATTACHMENT TO LINEAR DEMOLITION CHARGE 2-73
Fasten Bridle Cable to Rocket Harness Connector 2-75
Fasten Rocket Bridle Cable to Cable Sheath on Rail 2-75
Lower Launcher Rail and Tie Rail Down 2-77
Position Bridle Cable and Close Nylon Cover 2-76
Raise Launcher 2-73
ROCKET MOTOR 2-60
Inspection of Rocket Motor 2-63
Prepare Launcher for Rocket Installation 2-61
Unpacking Rocket Motor 2-62
ROCKET MOTOR INSPECTION 2-64, 2-66
Button Lug Bands 2-64, 2-66
Cable Assembly 2-64
Electrical Lead 2-64, 2-66
Exterior Rocket Motor Body 2-64, 2-66
Quick Release Pin 2-66
Retainer Screw 2-64
Thrust Neutralization Plug 2-66
ROCKET MOTOR INSTALLATION ON LAUNCHER RAIL AND CHECKOUT 2-68
Check Operation of Rocket Motor Release Mechanism 2-71
Install Rocket Motor on Launcher Rail 2-69
Secure Rocket Band Assemblies with Tiedown Straps 2-72
Secure Test Equipment and Launcher 2-86

S

SAFETY, CARE AND HANDLING 1-3
SAFETY SWITCH ASSEMBLY REMOVAL, REPAIR, INSPECTION
Replacement 5-5
Removal Procedure 5-5
Remove Safety Switch Assembly 5-5
SAFETY SWITCH ASSEMBLY REPAIR 5-8
SCOPE OF MANUAL 1-1
SELECTOR SWITCH ASSEMBLY (MODs 2/3) 4-116
Replace Cover 4-117
Replace Knob 4-117
Replace Lamp 4-117

INDEX (Cont)

Subject **Page**

S (Cont)

SELECTOR SWITCH ASSEMBLY REPAIR 5-14
Cable Assembly No. 2 Repair 5-15
Cable Assembly No. 2 Replacement 5-15
Opening the Selector Switch Assembly for MOD 0 and MOD 1 5-15
SERVICE UPON RECEIPT 4-2
Inspect Launcher 4-4
Inspect M58A3/A4 (HE) 4-7
Inspect M68A2 (Inert) 4-7
Inspect MOD 3 Rocket 4-7
Inspect MOD 4 Rocket 4-7
Unpacking Launcher 4-3
SPECIAL TOOLS, TMDE, AND SUPPORT EQUIPMENT 4-1
SYSTEM OVERVIEW 1-27

T

TEST AND ADJUST LAUNCHER SAFETY SWITCH ASSEMBLY 5-12
Adjust 5-13
Test 5-13
TOUCH-UP PAINTING 4-117
General 4-117
Painting - Alkyd Enamel 4-119
Painting - Polyurethane CARC 4-119
Painting - Support Rails 4-119
Precautions 4-118
Preparation 4-118
Priming 4-118
TRANSPORTATION OF MINE CLEARANCE LAUNCHER (MARINE CORPS ONLY) 5-50
Aircraft (Fixed Wing) Transport 5-52
Ground Transportation 5-50
Helicopter Transportation (External) 5-51
Ship Transport 5-52
TROUBLESHOOTING PROCEDURES 3-5
Fuze Cannot Be Assembled on Linear Demolition Charge 3-5
Inert Fuze Damaged During Deployment 3-7
TROUBLESHOOTING PROCEDURES FOR THE HYDRAULIC ASSEMBLIES 4-8

U

UNIT MAINTENANCE 4-1

INDEX (Cont)

Subject **Page**

V

VISUAL INSPECTION AND CONTINUITY TESTING OF THE LAUNCHER SAFETY 5-8
Inspection and Continuity Procedure 5-8

☆U.S. GOVERNMENT PRINTING OFFICE: 1997-633-210/60019